PATENTS FOR INVENTIONS.

ABRIDGMENTS OF SPECIFICATIONS.

CLASS 94,

PACKING AND BALING GOODS.

PERIOD—A.D. 1884-88.

LONDON:
PRINTED FOR HER MAJESTY'S STATIONERY OFFICE
BY DARLING & SON, LTD., 1, 2, 3 & 5, GREAT ST. THOMAS APOSTLE, E.C.
PUBLISHED AT THE PATENT OFFICE, 25, SOUTHAMPTON BUILDINGS,
CHANCERY LANE, LONDON, W.C.

1897.

Digitized by Google

THE NEW YORK
PUBLIC LIBRARY
113483
ASTOR, LENOX AND
TILDEN FOUNDATIONS.
1898.

THE ASTOR LIBRARY
NY

Digitized by Google

EXPLANATORY NOTE.

The contents of this Abridgment Class may be seen from its Subject-matter Index. For further information as to the classification of the subject-matter of inventions, reference should be made to the *Abridgment-Class and Index Key*, published at the Patent Office, 25, Southampton Buildings, Chancery Lane, W.C., price One Shilling, postage (parcel post) Sixpence.

It should be borne in mind that the abridgments are merely intended to serve as guides to the Specifications, which must themselves be consulted for the details of any particular invention. Printed Specifications, price Eightpence, may be purchased at the Patent Office, or ordered by post on the Patents Form C[1] (to be obtained from any Post Office), no additional charge being made for postage.

NEW YORK PUBLIC LIBRARY
ASTOR, LENOX AND TILDEN FOUNDATIONS.

SUBJECT-MATTER INDEX.

Abridgments are printed in the chronological order of the Specifications to which they refer, and this index quotes only the year and number of each Specification.

Bags or sacks. *See* Sacks &c.

Bags, Paper and like. *See* Paper and like bags.

Bales.
fabrics for. *See Abridgment Classes* Waterproof and similar fabrics; Weaving and woven fabrics.
cover fastenings for. *See Abridgment Class* Fastenings, Lock &c.
labels, tickets, and label fastenings for. *See Abridgment Class* Labels &c.
ties and tie fasteners for. *See* Bale ties &c.

Bale ties and bale-tie fasteners. '*84*. 2007. 11,910. '*85*. 1648. 1878. 11,119. 15,778. '*86*. 2102. 2745. 11,080. '*87*. 1839. 4364. 5428. 13,965. 16,998. '*88*. 754. 7144. 15 193.
making by cutting and working metal. *See Abridgment Class* Metals, Cutting &c.
pliers for. *See Abridgment Class* Hand tools &c.

Baling-presses. '*84*. 2449. 2637. 4562. 6938. 8802. 9346. 10,324. 12,229. 12,230. 13,170. 14,748. '*85*. 1005. 2105. 2616. 2981. 3279. 3501. 3697. 7267. 7593. 11,119. 11,990. 14,427 '*86*. 1472. 4546. 5774. 10,858. 11,284. 12,558. 13,747. 13,969. 14,307. 15,426. 15,644. 15,890. '*87*. 5593. 6455. 10,648. 11,579. 13,401. 13,642. 13,817. 13,895. 14,522. 15,115. 16,925. 17,587. '*88*. 2919. 3038. 3805. 4580. 4924. 4973. 5391. 5585. 6034. 6118. 8523. 9031. 9789. 10,564. 10,867. 14,655. 16,355.

Binders or bale ties. *See* Bale ties &c.

Bottling granular, pulverulent, and like materials. *See* Packing &c.

Bundling or packing. *See* Packing &c.

Bundling-presses. *See* Baling-presses.

Carding pins, needles, and the like. *See* Packing &c.

Digitized by Google

Clips or clamping appliances for articles in transit. *See* Packing &c.

Compressing or baling presses. *See* Baling-presses.

Cones or bags, Paper. *See* Paper and like bags.

Cramps, Baling. *See* Bale ties &c.

Filling granular and like materials. *See* Packing &c.

Fragile articles, Treating to prevent damage during transit. *See* Packing &c.

Packeting granular, pulverulent, and like materials. *See* Packing &c.

Packing and wrapping-up for transit:
Excepting Ammunition, Receptacles for, [*Abridgment Class* Ammunition &c.]; Fabrics, Folding, blocking, packing, &c., [*Abridgment Class* Fabrics, Dressing &c.]; Firewood, (*bundling or packing*), [*Abridgment Class* Fuel, Manufacture of]; Hats &c., (*nesting or packing*), [*Abridgment Class* Hats &c.]; Match and like boxes &c., (*filling*), [*Abridgment Class* Fuel, Manufacture of]; Sheafing or binding apparatus for corn &c., [*Abridgment Class* Agricultural appliances for the treatment of land &c.];
for which see those headings.
advertising on wrappers. *See Abridgment Class* Advertising &c.
apparatus combined with—
cutting-machines for paper, leather, fabrics, and the like. '87. 10,631.
weighing-apparatus. '84. 14,970. '85. 6169. '88. 10,277.
articles and substances packed—
almond powder. '86. 9646.
animals, destroying, materials and compositions for. '86. 9646.
biscuits. '84. 13,561. '88. 6387.
blacklead. '86. 12,054.
bottles, jars, and like vessels. '78. 3286, [*Appendix, page* 67]. '79. 3752, [*Appendix, page* 67]. 4743, [*Appendix, page* 67]. '84. 4693. 9350. '86. 9968. 10,521. 13,719. '87. 517. 5805. 7939. 9817.
butter and butter substitutes. '85. 3187. 11,587
cakes. '88. 6387.
canvases, artists'. '88. 6162. 8612.
card games, cards for. '87. 14,225.
cards, [*unspecified*]. '87. 14,225.
cartridges. *See Abridgment Class* Ammunition &c.
chaff. '87. 16,781. 16,837.
cigarettes. '86. 6809. 10,337.
cigars and cheroots. '86. 1950. 6809. 10,337.
cleansing-compositions. '86. 16,037.
coal. *See* minerals &c. *below.*
cocoa, [*including* chocolate]. '84. 6211. 14,860. '86. 9646. 16,037. '88. 18,862.
coffee. '85. 6169. '86. 9646. 10,228. 16,037.
coins and medals. '87. 3176.
confectionery or sweetmeats. '84. 13,561. '86. 6993. '87. 10,631. '88. 18,458. 18,862.

Packing &c. for transit —*cont.*
articles and substances packed—*cont.*
dressings, surgical. '87. 6930. '88. 18,806.
dyes. '84. 12,666. '87. 7073.
eggs. '78. 2650, [*Appendix, page* 67]. '85. 2239. 11,587. 12,375. '86. 7613. 10,660. '87. 7281. 12,008. 15,669.
envelopes and newspaper and like wrappers. '88. 13,080. 17,473.
fish. '86. 2849. '87. 9247.
fish hooks. '84. 5823.
flour and meal. '84. 3600. '85. 6169. '86. 9646. 16,577.
food for animals. '88. 3019.
food preparations. '86. 2849. 3572. '88. 6013.
frames, picture and like. *See* picture frames *below.*
fruit and vegetables. '78. 2650, [*Appendix, page* 67]. '86. 2849. '87. 7281. 10,948.
glass ware, [*unspecified*]. '85. 3038. '86. 10,521. '87. 18,028.
grain and seeds. '84. 7743. '85. 6169. '86. 16,037.
groceries, [*unspecified*]. '86. 10,228.
lamps and burners, incandescent, mantles for. '86. 8709. 11,161. 11,287.
lard. '85. 11,587.
meat. '86. 2849. '87. 9247.
minerals, coal, ores, and the like. '87. 3206. '88. 10,277.
money. *See* coins &c. *above.*
mustard. '88. 11,820.
newspapers and periodicals. '84. 11,527. '87. 15,061.
paints, colours, and pigments. '86. 9646.
paper, cardboard, and the like. '88. 13,080.
patterns and samples. '87. 5898.
picture frames. '88. 6162. 8612.
pins, dress and like. '88. 13,668.
postcards. '88. 17,473.
pottery ware, [*unspecified*]. '85. 3038. 12,375. '87. 18,028.
samples. *See* patterns &c. *above.*
sewing-needles. '84. 2958. '86. 3345.
snuff. '86. 9646. '88. 18,862.
soaps. '84. 3409. 13,561. '86. 15,543. '87. 7281. 10,631. '88. 6423. 18,458.
soft soap. *See* soaps *above.*
spices. '84. 6211.
starch. '84. 6211. '86. 16,037.
sugar. '85. 6169. '86. 6809. '88. 18,862.
surgical and medical appliances. '87. 6930. '88. 18,806.
tea. '84. 7743. 16,020. 17,081. '85. 14,885. '86. 1950. 6809. 9646. 12,547. 16,037. '87. 10,294. '88. 10,126. 18,862.
tobacco. '84. 13,561. '85. 4195. 10,837. '86. 1950. 6809. 10,337. '88. 1211. 6003. 18,309.
washing-blue. '84. 12,666. '86. 12,054. '87. 7073.
yarns and threads. '84. 2958.
bags, paper and like. *See* Paper and like bags.
baling. *See* Bales; Bale ties &c.; Baling-presses.
bands, [bundling]. *See* Bale ties &c.
baskets and hampers. *See Abridgment Class* Trunks &c.

Digitized by Google

Packing &c. for transit—*cont.*
bottles, jars, and like vessels. *See Abridgment Class* Stoppering &c.
bottling granular, pulverulent, and like materials. *See* packeting &c. *below.*
bottling liquids and semi-liquids. *See Abridgment Class* Stoppering &c.
boxes and cases. *See Abridgment Class* Boxes &c.
buckets and pails. *See Abridgment Class* Hollow-ware.
bundling. *See* parcelling *below.*
cans and canisters. *See Abridgment Class* Hollow-ware.
carding pins, needles, and the like. '*86.* 3345. '*88.* 13,668.
casks and barrels. *See Abridgment Class* Casks &c.
clamping articles together for transit. *See* parcelling *below.*
contents of packages, viewing. *See* wrappers *below.*
crates. *See Abridgment Class* Boxes &c.
envelopes and newspaper and like wrappers. *See Abridgment Class* Writing-instruments &c.
fastenings for packages. *See Abridgment Class* Fastenings, Lock &c.
filling. *See* packeting &c. *below.*
fragile articles, treating to prevent damage during transit. '*86.* 11,161. 11,287.
frames for packing eggs and the like. '*78.* 2650, [*Appendix, page* 67]. 3286, [*Appendix, page* 67]. '*79.* 3752, [*Appendix, page* 67]. 4743, [*Appendix, page* 67]. '*85.* 2239. 11,587. 12,375. '*86.* 7613. 8709. 10,660. '*87.* 7281. 12,008. 15,669.
labels. *See Abridgment Class* Labels &c.
materials or fabrics, covering. '*84.* 2357. 3409. 5823. 9350. 10,585. 13,548. 13,561. 14,860. '*85.* 2979. 3038. 3187. 7850. '*86.* 2635. 2849. 3572. 5040. 9646. 9968. 10,126. 10,337. 10,521. 13,719. 14,614. 15,543. '*87.* 517. 7939. 9817. '*88.* 3019. 3787. 6476, [*Appendix, page* 68].
paper. *See Abridgment Class* Paper &c.
materials, packing. '*77.* 1008, [*Appendix, page* 66]. '*84.* 1602. 9070. 9350. 13,548. '*85.* 2979. 3038. 7850. '*86.* 3572. 4719. 5040. 10,126. '*87.* 517. 5532. 5805. 9247. 10,948. 18,028. '*88.* 3787. 12,228.
wood wool, making. *See Abridgment Class* Wood &c.
measured quantities, apparatus for delivering. *See Abridgment Class* Registering &c.
packeting and filling granular, pulverulent, and like materials. '*84.* 3600. 6211. 7743. 14,970. 16,020. 17,081. '*85.* 4195. 6169. 10,837. 14,885. '*86.* 6993. 10,228. 12,547. 16,037. 16,577. '*87.* 3206. 10,294. 16,781. 16,837. '*88.* 1211. 10,126. 10,277. 11,820. 18,309.
sack holders. *See Abridgment Class* Grain &c.
paper bags. *See* Paper and like bags.
paper holders. *See Abridgment Class* Cutting &c.
papering pins, needles, and the like. *See* carding &c. *above.*

Packing &c. for transit—*cont.*
parcelling. '*84.* 3409. 4693. 11,527. 12,666. '*85.* 4195. '*86.* 6809. 12,054. 15,543. '*87.* 3176. 5898. 6930. 7073. 10,631. 14,225. 15,061. '*88.* 1211. 3019. 6003. 6013. 6162. 6387. 6423. 8612. 13,080. 17,473. 18,309. 18,458. 18,806.
portmanteaus, and hand, travelling, and like bags. *See Abridgment Class* Trunks &c.
ropes and cords. *See Abridgment Class* Ropes &c.
sacks and like bags. *See* Sacks &c.
seals and sealing. *See Abridgment Class* Writing-instruments &c.
stapling. *See Abridgment Class* Nails &c.
straw casings, machines for sewing. *See Abridgment Class* Sewing &c.
wrappers, [*other than* postal tubes]. '*84.* 2357. 2958. 4693. 5823. 9350. 12,666. '*85.* 3187. '*86.* 1950. 3345. 5040. 10,337. 12,054. '*87.* 5898. 7073. 7939. '*88.* 6003. 6013. 13,668. 18,862.
wrapping or covering materials. *See* materials or fabrics, covering *above.*
wrapping-up newspapers and the like. *See* parcelling *above.*

Paper and like bags. '*84.* 3140. 5324. 6622. 16,295. '*85.* 5115. 5605, [*Appendix, page* 68]. 10,043. 14,796. '*86.* 126. 831. 856. 1507. 5712. 9179. 9646. 11,475. '*87.* 434. 766. 2699. 6015. 6067. 10,739. 10,788. 13,093. '*88.* 730. 2954. 3527. 5159. 8442. 15,374. 17,992. 18,392. 18,862.
advertising on. *See Abridgment Class* Advertising &c.
envelope bags. *See Abridgment Class* Writing-instruments &c.
filling. *See* Packing &c.
paper for. *See Abridgment Class* Paper &c.
printing. *See Abridgment Class* Printing, Letterpress &c.

Papering pins, needles, and the like. *See* Packing &c.

Paper cones or bags. *See* Paper and like bags.

Parcelling. *See* Packing &c.

Presses, Baling. *See* Baling-presses.

Sacks and like bags. '*84.* 3343. 3404. 6303. 7021. 10,585. 11,084. 11,357. '*85.* 1973. 4689. 8089. '*86.* 4051. 5323. '*87.* 7327. 10,583. 17,274. '*88.* 3405. 5066. 16,400. 17,474.
Excepting Mail bags and cases, [*Abridgment Class* Trunks &c.]; Sponge and like holders and receptacles, [*Abridgment Class* Toilet &c.];
for which see those headings.
fabrics for. *See Abridgment Classes* Fabrics, Dressing &c.; Waterproof and similar fabrics; Weaving and woven fabrics.
fastenings for. *See Abridgment Class* Fastenings, Lock &c.
filling. *See* Packing &c.

Digitized by Google

Sacks and like bags—*cont.*
filling on weighing-apparatus. *See Abridgment Class* Weighing-apparatus.
fireproof coverings and compositions for. *See Abridgment Class* Cements &c.
holders for. *See Abridgment Class* Grain &c.
labels, tickets, and label fastenings for. *See Abridgment Class* Labels &c.
locks for. *See Abridgment Class* Fastenings, Lock &c.
marking - compositions for. *See Abridgment Class* Paints &c.
preservative compositions for. *See Abridgment Class* Paints &c.

Sacks and like bags—*cont.*
printing on. *See Abridgment Class* Printing other than letterpress &c.
sealing. *See Abridgment Class* Writing-instruments &c.
sewing-machines for. *See Abridgment Class* Sewing &c.
weaving. *See Abridgment Class* Weaving &c.

Ties, Bale. *See* Bale ties &c.

Trussing or baling presses. *See* Baling-presses.

Wrapping-up for transit. *See* Packing &c.

Digitized by Google

NAME INDEX.

The names in *italics* are those of persons by whom inventions have been communicated to the applicants for Letters Patent.

Abell, W. P. ..... '85. 3697
Aimers, J. ..... '88. 14,655
Ainsworth, W..... '88. 18,392
Allen, V. I..... '88. 9031
Allison, H. J. ... '84. 4693. 8802
9346
Allport, D. ..... '86. 14,614
Amos, M..... '84. 14,748
Anderson, C..... '86. 856
„ J. ..... '86. 2102
Andrew, F..... '85. 1648
Andrews & Bevan. ... '87. 16,781
16,837
Andrews, W. '87. 16,781. 16,837
Arbey, L..... '87. 18,028
Arnold, C. H..... '85. 7850

Baines, J. M. ..... '86. 1507
Baker, J. M. ..... '85. 3038
Baker, J. M. ..... '87. 7939
Bamber, J..... '85. 7593
Baron, Bibby &..... '88. 17,992
Baron, J..... '88. 17,992
„ W. ..... '88. 17,992
Barrow, E. '86. 11,080. '87. 4364
Baumgarten, C. ..... '84. 10,324
Baynes, F. ..... '85. 4689
Beach, J. N..... '86. 13,719
Beardsley, M. W. ..... '88. 3787
Bearen, A. W...... '87. 16,781
16,837
Belcher, F. C. ..... '86. 831
Bell, T. C. '84. 6211. '86. 16,037
'87. 766
Bellhouse, E. L. ..... '86. 4546
'88. 6118
Bendix, L. ..... '87. 7327
Bevan, Andrews &.... '87. 16,781
16,837
Bibby & Baron. ..... '88. 17,992
Bibby, J..... '88. 17,992
„ J. T. ..... '88. 17,992

Bishop, T. ..... '87. 15,669
Blair, M. J..... '88. 8442
Bodley, H. E..... '87. 14,522
Bonvillain, P. ..... '88. 5585
Borns, G. M. ..... '84. 11,527
'87. 15,061
Boult, A. J. ..... '85. 3187
Bourdon, J. ..... '84. 9070
Bousfield, E. T..... '88. 2919
Bower, E. C. ..... '87. 7281
Bradbury, J. ..... '88. 3038
Bradford, T..... '85. 11,587
Bradshaw, J. B..... '87. 5428
Brewer, E. G..... '86. 10,337
Brewtnall, H. W. ..... '85. 1878
Briggs, T. ..... '84. 3404
Brookes, A. G. ..... '86. 11,475
Brooks, W..... '88. 2954
Brunner, E. H..... '86. 126
Bühler, A. ..... '88. 13,080
Bumsted, F. D. ..... '86. 856
Burgess, C. T..... '87. 15,115
„ W. J..... '87. 15,115
Burtscher, H..... '87. 6930

Capel, H. C.... '85. 3501. 11,119
'86. 12,558. '87. 11,579
Carson, A. ..... '84. 16,020
Charleson, W..... '84. 13,548
Chartier, Grimaud &. '87. 14,225
Cheevers, J. ..... '85. 6169
Cheswright, C..... '84. 14,860
„ C. E. H... '86. 2635
Christopher, W. B... '87. 10,583
Clapp, J. A..... '88. 5066
Clark, A. M..... '84. 3600. 4562
10,324
Clarke, G. R. ..... '88. 15,374
Clawson, C. C...... '84. 14,970
Cluderay, T. ..... '85. 8089
Clyne, J. ..... '88. 10,126

Coates, T.... '84. 6622. '85. 5115
Cochrane, H. '79. 3752, [*Appendix, page* 67]
Coleby, T. ..... '87. 5593
Collitt, J. S..... '87. 13,817
Corrigan, J..... '88. 9789
Costa, A. E. da ..... '84. 11,357
Crane, P. Moir-..... '87. 5805
Cropper, S..... '87. 6015
Crosland, W. ..... '88. 8523
Cummins, A. E..... '84. 2637
'85. 1005. '88. 3805

Dack, W. N..... '84. 12,230
Dalziel, D. ..... '84. 16,295
Day, J. M. ..... '86. 12,547
„ St. J. V.... '84 3343. 6303
7021. 10,585
Dick, D. ..... '84. 4693
Dick, J..... '84. 17,081
Dickie, W. ..... '86. 5712
Donisthorpe, A. R... '86. 10,858
Dowling, J. P. ..... '88. 4973
Drewett, T. ..... '84. 12,229
Duerden, J..... '87. 13,093
'88. 17,992
Dufton, W. H. ..... '86. 1950
Dunn, & Co., Gray. ... '88. 6387
Dunn, J. S..... '88. 12,228
Duxbury, J..... '87. 16,998
Dymond, G. C. ..... '88. 18,862

Edge, W. '84. 12,666. '87. 7073
Edwards, A. ..... '85. 3187
Edwards, E..... '87. 5532
„ S..... '86. 10,126
Elias, L. ..... '86. 9646
Elkan, A..... '84. 11,910
European Paper Bag Machine Co..... '85. 10,043

Digitized by Google

Fewster, P. ..... '84. 13,170
Fleetwood, D. J. ..... '88. 6003
Forster, C. ..... '84. 9350
Frank, H. ..... '84. 11,910
Frank, H. ..... '85. 15,778
Freeman, T. ..... '88. 10,277
Frérot, C. ..... '87. 10,788
Frysinger, B. C. ..... '84. 3600
„ *J.* ..... '84. 3600

Garner, T. ..... '84. 6938
Gates, T. ..... '84. 11,084
Gauchot, P. ..... '87. 14,225
Gee, R. ..... '85. 14,427
Geldart, T. ..... '88. 6423
Gelinek, M. ..... '88. 6476, [*Appendix, page* 68]
Germain, F. E. de ..... '86. 9179
Gibbons, G. ..... '85. 5605, [*Appendix, page* 68]
Golding, W. ..... '85. 11,990
Goode, C. P. ..... '88. 3019
„ F. W. ..... '86. 2745
Gossage, F. H. ..... '86. 15,543
Gray, Dunn, & Co. ..... '88. 6387
Gray, W. ..... '88. 6387
Green, W. R. ..... '86. 12,547
Greenhill, M. C. ..... '88. 8612
Grimaud & Chartier. '87. 14,225
Guyon, F. L. J. ..... '88. 5585

Haddan, H. J. ..... '84. 9350 '87. 10,648
Hale, E. ..... '87. 1839
Hancock, E. ..... '88. 4580
Hansen, H. G. ..... '86. 1472
Harris, H. '85. 2981. '87. 13,895
Hawley, C. P. ..... '88. 754
Henwood, J. L. ..... '88. 6003
Heyligenstaedt, L. ..... '87. 3206
Hindle, C. L. ..... '88. 8612
Hochstadte, A. F. ... '85. 15,778
Hodgson, J. ..... '87. 434
Holt, F. ..... '8 . 14,522
„ W. ... '78. 3286, [*Appendix, page* 67]
Honiss, W. H. ..... '85. 14,796 '87. 6067
Howard, H. P. ..... '84. 13,561
„ J. H. ..... '88. 2919
Howarth, J. ..... '85. 3279
Humble, J. P. ..... '84. 3409
Hutchison, A. L. ..... '85. 14,885

Idle, T. W. ..... '88. 15,374
Imray, O ..... '87. 9817
Inglis, W. ..... '86. 5712

Jarboe, W. S. ..... '87. 10,631
Jarbor, W. S. ..... '88. 18,458
Jeger, J. ..... '87. 5532
Johnson, J. H. '85. 1973. 10,043
Jones, F. ..... '84. 13,561
„ S. ..... '84 13,561

Kerr, W. H. ..... '87. 17,274

Lake, H. H. '85. 3038. '86. 9968 '87. 517
„ W. R. ..... '78. 2650, [*Appendix, page* 67]. '84. 3140. 11,910.
Lande, B. ..... '84. 11,910
Leclercq, L. P. ..... '87. 5898
Leeming, J. ..... '86. 15,890
Leinbach, F. W. ..... '86. 126
Lennox, A. B. ..... '87. 13,965
Leonardt, F. ..... '84. 7743
Lerch, W. ..... '88. 6476, [*Appendix, page* 68]
Lesieur, L. F. ..... '86. 10,521
Leuty, J. E. ..... '87. 6455
Lewis, G. ..... '84. 2449. 12,229 '86. 15,426
Lindon, H. ..... '84. 2007 '88. 15,193
Lloyd, F. G. ..... '85. 4195
Long, O. ..... '84. 9350
Lonitz, H. ..... '87. 3176
Lorenz, W. A. ..... '85. 14,796 '87. 6067
Louvot, E. P. ..... '85. 2979
Low, W. ..... '88. 3405

McEwen, J. ..... '88. 11,820
Mackenzie, F. ..... '86. 1472
McLean, P. ..... '88. 14,655
Maggi & Co., J. ..... '88. 6013
Marsh, J. ..... '87. 13,401 '88. 16,355
Maxwell, D. A. ..... '79. 4743, [*Appendix, page* 67]
Mayos, T. T. ..... '85. 7267 '86. 15,644. '88. 6034
Middleton, G. H. ..... '84. 5324
„ W. ..... '85. 2239
Mills, J. A. ..... '87. 10,583
Moir-Crane, P. ..... '87. 5805
Moore, J. T. .... '85. 2105. 2616
Müller, P. J. ..... '88. 18,862
Murray, D. A. B. ..... '86. 4051

Nelson, R. ..... '87. 10,294
Newton, H. E. ..... '86. 9179
Norcombe, E. S. ..... '87. 2699
Norris, H. D. ..... '86. 9968

Packer, E. G. W. ..... '86. 7613
Paget, A. ..... '8d. 8709. 11,287
Peace, F. H. ..... '84. 5823
Pearce, T. J. ..... '88. 3787
Pearman, D. ..... '86. 10,228
Pelling, T. L. ..... '86. 2849
Perkins, J. E. S. ..... '87. 17,587
Pitt, S. ..... '77. 1008, [*Appendix, page* 66]
Pocock, S. J. ..... '85. 12,375
Pond, J. A. ..... '86. 3572
Pool, J. C. ..... '86. 10,660
Portillo, F. A. y. ..... '88. 17,474
Purvis, W. B. ..... '84. 3140

Rawson, F. L. ..... '86. 11,161
„ W. S. ..... '86. 11,161
Redfern, G. F. ..... '87. 10,788
Reeves, W. E. ..... '87. 2699
Reid, W. F. ..... '87. 10,948
Richter, C. F. ..... '86. 4719
Ripberger, G. ..... '85. 1973
Ripley, R. ..... '86. 12,054
Ritter, E. ..... '78. 2650, [*Appendix, page* 67]
Robinson, A. S. ..... '84. 8802. 9346
Rose, W. ..... '85. 10,837
Ruck, H. ..... '88. 4924
Russell, C. H. ..... '86. 6809

Samuelson, E. ..... '86. 16,577
„ Sir B. ... '86. 16,577
Satchell, T. ..... '88. 3527
Schell, A. ..... '84. 8802. 9346
Schlatter, O. ..... '87. 6930
Schlüter, C. ..... '84. 9350
Schmid, A. ..... '87. 6930
Scott, E. '86. 14,307. '87. 13,642
Sharp, D. ..... '88. 3405
Sherring, E. ..... '86. 5040
Shield, H. ..... '85. 3279
Simmons, W. A. ..... '87. 9817
Slaney, A. J. ..... '87. 10,294
Smith, W. S. ..... '88. 7144
Smyth, G. H. M. ..... '86. 13,719
„ G. M. ..... '84. 1602
Spence, H. ..... '86. 5323
Stearns, C. O. ..... '86. 11,475
Steenberg, J. F. V. ... '87. 9247
Stevens, J. G. ..... '87. 2699
Stone, R. ..... '88. 16,400
Storey, A. H. ..... '87. 12,008
Stout, J. R. ..... '86. 6993
Stuart, O. ..... '88. 17,473
Stuttard, W. ..... '88. 18,806
Swan, P. S. ..... '84. 3343. 6303 7021. 10,585

Thomas & Sons, S. .... '86. 3345
Thomas, H. '84. 2958. '86. 3345
Thompson, R. H. ..... '86. 9968
Thompson, W. P. ..... '86. 3572 '87. 17,274. '88. 6476, [*Appendix, page* 68].
Thornton, R. S. ..... '88. 5391

Digitized by Google

Thurber, Whyland, & Co. ....'84. 14,970
Tichenor, J. M. .....'84. 4562
Tickle, J. .....'84. 7743
Tiller, J. G. .....'84. 2357
Tinchant frères. .....'86. 10,337
Tomlinson, J. .....'88. 5159
Trayes, J. .....'86. 2102
Turner, W.....'84. 2449
'86. 15,426
Turney, G. L.....'88. 13,668
„ J. N.....'88. 13,668

Urquhart, A. .....'86. 13,969

Vaughan, G. E. .....'87. 16,781
16,837
Vulcanized Fibre Co...'77. 1008, [*Appendix, page* 66]

Walker, H. C.....'86. 12,547
Warburton, J. S. .....'86. 5774
Warnes, W.....'87. 16,925
Washington, S. .....'86. 1507
Watson, J. .....'86. 11,284
Weidenbusch, A.....'88. 730
West, D. K. .....'88. 5391
Whalley, J. .....'85. 4689
Wharton, J. H. .....'87. 13,965
Whiteman, W. T. ...'84. 14,970
Whittaker, G.....'88. 10,867
Whyland, & Co., Thurber.....'84. 14,970
Wiggin, E. R. .....'87. 517
Wigney, C. McL. .....'88. 6162
Wilcox, G.....'88. 1211. 18,309
Wilkinson, F.....'87. 5805
Wills, H. H. .....'85. 10,837
Windust, C. C. .....'85. 14,885
Wirth & Co......'88. 18,862
Wise, W. L. .....'88. 6013
Wolf, B. .....'87. 10,739
Wolle, C. A.....'86. 126
Wood, G.....'86. 13,747
Wood, N. B......'87. 10,648
Woodville, G. .....'88. 10,564

Digitized by Google

Digitized by Google

PACKING AND BALING GOODS.

Patents have been granted in all cases, unless otherwise stated. Drawings accompany the Specification where the abridgment is illustrated and also where the words *Drawings to Specification* follow the date.

A.D. 1884.

1602. Smyth, G. M. Jan. 17.

Packing-materials.—To a backing of paper, muslin, or calico a layer of cork in fragments or small pieces is cemented. The material thus produced may be used singly with or without a facing of muslin, paper, &c., or may be folded together so as to show two similar faces.

2007. Lindon, H. Jan. 24. *Drawings to Specification. Amended.*

Bale ties and bale-tie fasteners.—The ends of bale ties are bent over to form loops over which a rectangular buckle is placed, pins or bars being then pushed through the loops to fasten the tie.

2357. Tiller, J. G. Jan. 30.

Wrappers.—Consists in ornamenting what are known as "tillotting cloths," used as wrappers, by embroidering them in such a way that, after use as wrappers, they may be utilized according to the design embroidered thereon. Thus, the embroidered portion of the cloth can be cut out to form mats and similar articles, as shown.

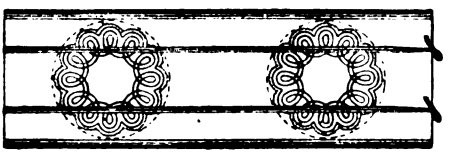

2449. Turner, W., and Lewis, G. Jan. 31.

Baling-presses, hydraulic. One or more false rams A, operated by steam power, are attached to the follower B, and give a preliminary pressure to the bale. The false rams pass through the crosshead C, to which are coupled the rams D of the hydraulic cylinders E. When the false rams A are raised above the crosshead they are secured by the slides F connected to the crossheads by links G. At this point the hydraulic rams raise the crosshead together with the false rams, and give the final pressure to the bale. The return stroke of the press is made by allowing the water to escape through a small back-pressure cylinder H. The pumps are connected to each other and to the press by single pipes and single regulating-valves. The return water valves are opened by raising the pressure valve, which reduces the pressure, and allows the other valves to be lifted by a bar or bars. The press-box is made in two parts, the upper part revolving and the lower stationary or travelling on tram rails. The inner nuts for the columns are formed in two pieces bolted together, and these, as well as the press doors, are made entirely of cast steel.

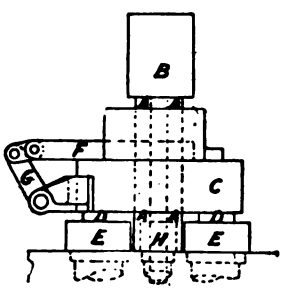

2637. Cummins, A. E. Feb. 2.

Baling-presses.—The cotton or other substance to be baled is fed from a trough into a closed chamber, in which it is to be compressed, by a

Digitized by Google

ram or screw to which a reciprocating motion is imparted. When a sufficient quantity of material for a bale has been fed into the chamber, a longer travel is given to the screw or ram, or a ram is actuated from the back of the chamber, to finally compress the whole contents of the chamber. Backward movement of the material in the chamber is prevented while filling by fingers in the form of segments of discs, fixed concentrically upon two axes mounted at two opposite sides of the bale chamber. These segments turn inwards through slots in the sides of the chamber by the action of a weight, spring, or hand-levers, and are provided with stops to prevent them from turning too far. Parallel grooves are made across the face of the followers and the end of the chamber to admit of the lashing bands or hoops being passed round the bale.

2958. Thomas, H. Feb. 8.

Packing sewing-needles &c.—The needles are threaded with sewing-material and are packed in any of the usual methods in a wrapper. To prevent the different threads from becoming entangled, their ends are fastened to a label or card *c*, and in addition the threads may be plaited or may pass

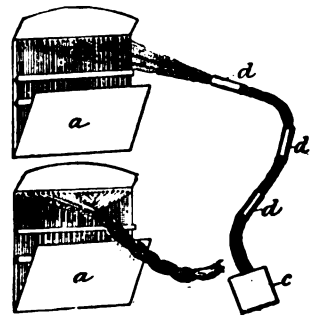

through tubular bands *d*. The connected threads may be folded round the wrapper *a* or round an independent card or coiled up, and the whole placed inside a case or box.

3140. Lake, W. R., [*Purvis, W. B.*]. Feb. 12.

Paper and like bags, machines for making. The end frames A, A, connected by frames A^1, carry wheels B, B^1 over which travel feed belts C, C tightened by pulleys D, D. These belts are caused, by suitably-mounted tension rolls, to clamp the paper tubes between them. The pulley B at the forward end has perforated flanges

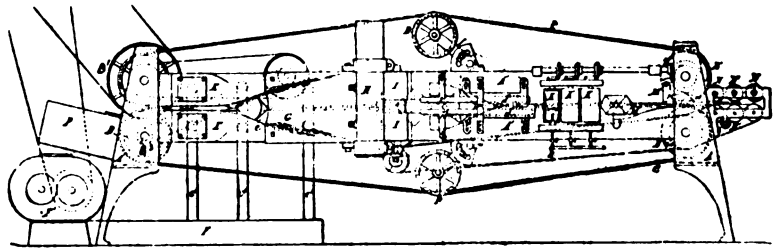

on either side which run over fixed flanged heads closing the ends of the wheel. These flanged heads are secured to a hollow perforated shaft B^3, and are slotted for a quarter of their circumference to allow of air being sucked through the perforated pulley flanges. The air is sucked from the shaft B^3 by a tube leading to an exhaust blower, the suction being made intermittent by a rotating disc arrangement or interrupter. The paper tubes, on each of which a satchel bottom is to be formed, are fed singly by fingers from a box P on to the flanges of B, the suction carrying each one up between the belts C, C. The suction is then cut off until the next tube passes up. The tube passes between the formers E, E, the sides being drawn apart against its curved perforated faces *e* by suction, caused by an exhaust blower F^1 connected with E, E by pipes F and c^1. To ensure the tube folding properly, a concave part is given to the outer edges of the formers, and to ensure the rear end folding first, a hood G is placed on the rear end of the formers so that the air currents travel in the same direction as the bag, but more quickly. The tube is then passed between a pasting-roller I and a curved plate, and receives paste on the diamond folds. The roller is fed with paste from a vat H, and is driven from the wheel B by a band and gear-wheels. The diamond fold then passes under adjustable plates J^1, over which its points are bent by curved adjustable former plates J, and on emerging from the same the bottom is pasted. It then passes under heated drying-rollers K driven from B^1. The tube passes along and the lower flap is turned up by a guide M, and then the upper flap turned down by a guide M^1, and the bag is received by rollers N, which complete the drying and discharge it ready to be packed.

3343. Day, St. J. V., [*Swan P. S.*]. Feb. 15.

Sacks and like bags.—To prevent the fibres and shreds of the jute cloth from which bags or packs for wool are made becoming detached, that side which is to form the inside of the bag is twilled and sized or starched. The outside may also be sized.

Digitized by Google

3404. Briggs, T. Feb. 16.

Sacks and like bags.—Coffee and sugar bags, it is stated, are usually made of jute or similar fabric with a paper lining attached by a waterproof composition, and the invention consists in substituting the material known as "union" for the paper lining. This "union" is composed of a loose cotton fabric faced on one side with paper pulp, and in applying it to the lining of bags the paper side is coated with the adhesive composition, preferably pitch, and attached thereby to the fabric of the bag. By this means a clean white interior surface is produced free from loose fibres. The material may be employed for other similar purposes.

3409. Humble, J. P. Feb. 16. *Drawings to Specification.*

Parcelling soft soap.—A shell having a movable bottom is filled with soft soap, and a mould is bolted to its mouth. A screw press, applied to the movable bottom, forces the soap through the mould on to a sheet of paper. The paper and the soap then pass on together to a cutting-table, and are cut into slabs in such a manner as to leave ends of the paper to fold over the ends of the slab of soap. The whole can then be packed in paper, tin-foil, tin-foil paper, cardboard, or the like.

3600. Clark, A. M., [*Frysinger, J.*, and *Frysinger, B. C.*]. Feb. 19.

Filling flour into cases or barrels. The presser-box P is filled with flour or other substance by the shoot Q, a head O being placed by the sliding apron U between the substance and the follower B. The follower B is operated by friction pulleys D and G^1 acting upon the bar C of the follower. A sliding frame H, actuated by the lever I, causes the pulley G^1 to be in close contact with the bar C. The packing-case G is provided with holes I^1 to allow the escape of compressed air, and holes J to facilitate nailing the head in the case when the pressing is completed.

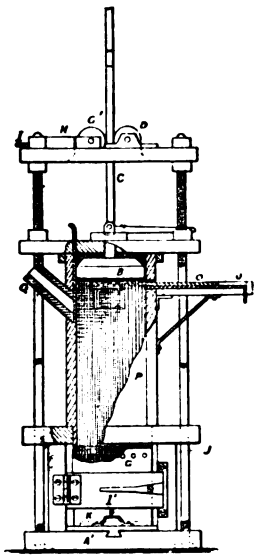

For inserting or withdrawing cases a slide K is provided having a longitudinal rib fitting into a groove in the platform A^1.

4562. Clark, A. M., [*Tichenor, J. M.*]. March 7.

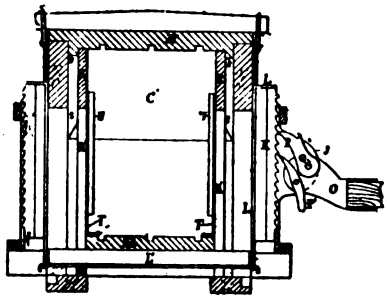

Baling-presses.—The pressing-device employed consists of a rack and lever with two pawls at each end of the press. The lever O is pivoted between brackets J, one of the pawls P being pivoted at the fulcrum Q of the lever, and the other P^1 below the fulcrum. As the lever is worked up and down the pawl P sustains the rack and the lower one P^1 lifts. On the inside of the bar attached to the rack is a wrought-iron strap L fitted at its lower end to receive the batten L^1 which extends beneath the movable follower M. Two false sides or looseners R support the hay while being pressed, but give way when the doors C^1 and H are opened, thus releasing the bale. This effect is produced by securing bevelled strips *s* to the inside of the doors transversely, the strips supporting the looseners. These looseners have central slots R^1 to allow the upward movement of the follower and lifting-batten. Self-adjusting plates T kept close against the looseners by cleats U prevent access of hay to the slots.

4693. Allison, H. J., [*Dick, D.*]. March 11.

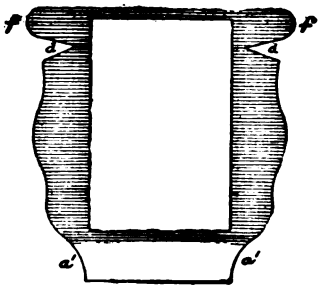

Wrappers for bottles or packages. The wrapper is cut to a peculiar shape, as shown in the Figure, the rectangle in the centre being for the label, and the narrow strip between the points *d*, *d* and the end being coated with paste. Commencing at the narrow end a^1, a^1, the paper is wrapped around the package, the pasted part lapping over the part a^1, a^1. At a^1, a^1 and *d*, *d* the wrapper is of the same length as the package, the curved outline allowing for the folding over of the ends. The curvature to be given to this part depends upon the form of the package. Finally, the pasted tongues *f*, *f* are folded over and securely fasten the ends.

Digitized by Google

5324. Middleton, G. H. March 22.
Drawings to Specification.

Paper and like bags.—Vegetable parchment bags, employed in packing lard, are rendered airtight and waterproof by immersion in a solution of gelatine, glycerine, borax, and water.

5823. Peace, F. H. April 2.

Contents of packages, viewing.—Relates to wrappers for fish-hooks or other small articles. A is a pane of any transparent material, such as talc, gelatine, &c., through which the articles inside the wrapper may be seen.

6211. Bell, T. C. April 10.

Packeting and filling granular &c. substances.—Cocoa, spices, starch, &c. are filled into packets placed in a frame formed of compartments which may be opened when the packets are full. The apparatus consists of an upper and lower frame; in the lower frame are a number of receptacles formed by the pieces G, H, E. Each piece G extends right across the frame, and to each is attached at the front and back alternately short pieces E with only one end attached. The latter pieces slide on wires H passing through G, so that by suitably connecting the cross-pieces G with india-rubber tubing, and then pulling the front one, they will slide in the slit A and get further apart, thus releasing the packets in the receptacles, and also enabling bulkier powder to be filled by the same machine. The upper frame with the perforations L is the filler, the powder passing through into the paper bags placed below.

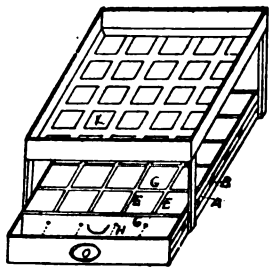

6303. Day, St. J. V., [*Swan, P. S.*]. April 12. *Amended.*

Sacks and like bags for wool. The jute cloth of which packs or bags are made is prevented from throwing off fibres and shreds, which would mingle with the wool, by some one or a combination of the following processes—singeing, cropping, sizing, starching, gumming, mangling, and calendering. The process is applied to the interior side, or to both sides, of the cloth to be used. The packs or bags are then sewn with the rough edges turned to the outside. Figs. 1 and 2 show the arrangement of raw edges *a* and sewing *b* for the packs, and Figs. 3 and 4 show the same for the bags.

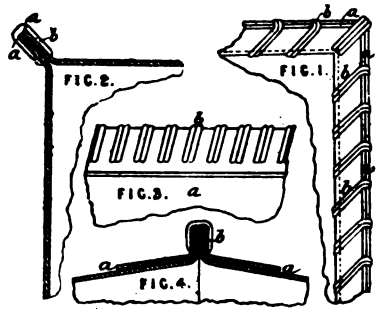

6622. Coates, T. April 21.

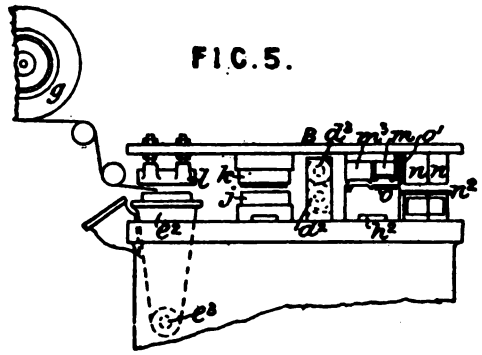

Paper and like bags, making. A continuous web of paper from the roll *g* passes between a type-bed e^2 and a printing-platen *l* attached to a platen B which rises and falls at intervals. By the oscillation of the bed e^2 about a spindle e^3 the type surface receives ink from a number of rollers. The web, thus printed on its underside, passes between cutters *k* and fixed dies *j*, and is cut longitudinally and angularly to the required shape. The rollers d^2, d^3 are made, by suitable mechanism, to draw off the required length of paper, which is then creased by projections on blocks m^3 and corresponding grooves in the fixed plate h^2. The paper is also pasted by plungers which pass through slots in the bottom of a paste-box *m* as the platen B rises and falls. On the next rotation of the draw-up rollers d^2, d^3 the paper is brought over a mould plate n^2, and is cut off at right-angles to its length by blades *o*, o^1. Stamps *n* then thrust the blanks into openings in the plate n^2. The stamps are withdrawn, and the flaps of the blank folded down by the action of sliding plates. The bags thus made are pressed successively through the mould plate into a receiving-tube provided with a spring piston. The cutting, pasting, and folding parts may be modified to suit the formation of differently-shaped bags.

Digitized by Google

6938. Garner, T. April 29.

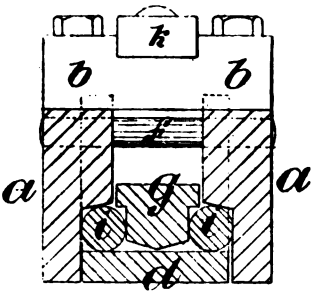

Baling-presses.—Relates to a hydraulic press packing-stillage. The stillage consists of a series of "sections" which are attached to a plate at the top of the press so as to present a flat and even surface to the bale. Each section is composed of two side members *a* joined together at each end by cross-pieces *b*. The movable plate *d* is formed at each end with a double jaw through which pass studs or pins *f*, the projecting ends of which rest in recesses in the side members *a*. Above the plate *d* is a lifting-bar *g* with inclined faces at each end resting partly on similarly-inclined portions of the movable plate. Two backing rods or bars *i* are placed between the plate *d* and inclined shoulders on the inner sides of the members *a* to support the plate. When it is desired to pass a binding-hoop around the bale, the movable plate *d* is lifted by pulling the lifting-bar *g*. As the plate ascends the rods *i* are caused by the inclined shoulders to roll towards the centre of the section so as to offer no resistance to the continued ascent of the plate. The sections are attached to a plate at the top of the press by means of the projections or catches *k*.

7021. Day, St. J. V., [*Swan, P. S.*]. April 30.

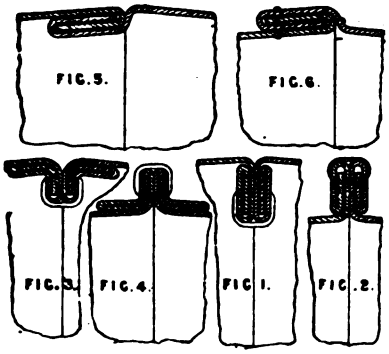

Sacks and like bags.—Relates to packs or bags for wool. The seams are sewn so that the rough edges are prevented from coming in contact with the wool. The edges are hemmed, and then turned to the interior or exterior of the pack or bag as in Figs. 1 and 2, or sewn flat inside or outside as in Figs. 3 and 4, or they may be doubled over one another inside or outside as in Figs. 5 and 6. The fibres from the raw edges are thus prevented from breaking away and mixing with the wool. The invention is applicable to packs made of plain or twilled cloth as well as to those made of cloth or yarns treated as described in Specifications Nos. 6303 and 6307, A.D. 1884.

7743. Tickle, J., and Leonardt, F. May 15.

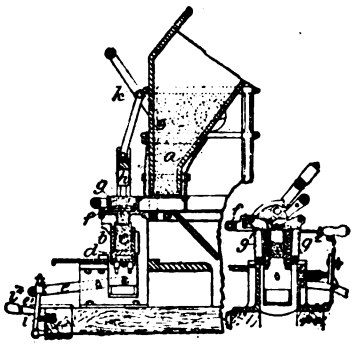

Packeting and filling granular &c. substances.—Relates to machinery for filling, compressing, and folding, to be used in making up packets of powdered and other materials, such as tea or seeds. The filling is effected by a movable platform *d*, on which is placed a divided box or mould *b*, having a number of receptacles to correspond with a series of spouts which project from a fixed platform *f*, the latter being placed in front of a hopper *a* containing the powder. In the receptacles are placed the bags to be filled. By means of the lever *e* the platform *d* and the mould *b* are raised to the spouts, and can there be held in position by means of a stop e^1. By pressing the spring *i* the platform can be lowered. The platform *d* can thus be held in any position, and this device is made use of to ensure a uniform weight of the material in the bags. In combination with these there is a sliding drawer *g*, which passing under the hopper receives the powder, and on being drawn forward over the spouts it strikes against a stop, and thus the powder is driven through a grating at the bottom on to the spouts and bags. To effect the adjustment of the powder in the bags, the platform *d* can be oscillated by means of cams. The powders are further pressed into the bags by rammers *h* worked by weighted levers *k*. To effect the creasing and folding of the bags the moulds or boxes are next passed to a channel on a movable platform. A forked bar *f* is passed between the open ends of the bags, and then front and back creases g^1, g^2 are, by an arrangement of levers, moved back and forward, thus effecting the two first folds. The other two folds are effected by moving the moulds to the right and left alternately under the creasers. The moulds at this stage are held fixed in position by a lever at each end. The form of the packet is made more perfect by raising the movable platform and pressing the packets against the creasers. A honeycombed arrangement at the bottom of each receptacle keeps the bottom of the packets in shape. The moulds are next passed to a skeleton platform, and the bags come against rammers, being thus ejected on to a band which takes them to be re-wrapped.

Digitized by Google

8802. Allison, H. J., [*Robinson, A. S.*, and *Schell, A.*]. June 10.

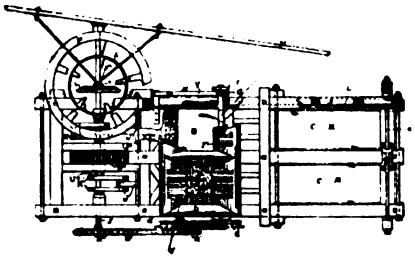

Baling-presses.—The Figure shows a side elevation, partly in section, of the baling-press, which is a duplex press having two platen chambers B arranged one above the other, and two baling-chambers C, C¹ with open sides M similarly arranged. Secured to the linings L of the baling-chambers are longitudinal ways *m*, *m*, preferably of metal, and the opposite edges of the partition boards have grooves to fit these ways. Above the lining boards L is a stiffening-rack which can be depressed by means of a bolt for the purpose of contracting the rear end of the baling-chamber. The upper platen chamber is shown in section with its platen; below this in the Figure is shown an elevation of one of the feeding-chambers D with expanding sides, and the swinging gate in closed position. The feeding-mechanism consists of endless chains of spurs moving towards the platen chamber, and is operated by gear-wheels, sprocket-wheels, and a chain from the shaft *s*. By the operation of this feeding-mechanism the material is compacted as it is fed into the platen chamber. The swinging gates are provided with slots to give passage to the spurs, and are automatically operated on the movement of the platens by means of a rack bar engaging a toothed quadrant, and eccentric quadrant on the shaft, to which the gates are secured in such a manner that, when a platen is retracted for feeding in the material, the corresponding gate swings open against the side of the feeding-chamber, and when the platen moves forward to compress the material the gate closes automatically. Pivoted dogs working in slots bear against the rear ends of the compacted bale when the pressure of the platen is withdrawn. The platens are actuated in a reciprocating manner by connecting-rods, cranks, and a shaft. The press may be operated by a sweep lever acting upon a shaft at the side of the press, and giving motion to a gear-wheel, or by a belt pulley giving motion to the same shaft by bevel gearing. A heavy flywheel W is employed to regulate the action of the machinery.

9070. Bourdon, J. June 17. *Drawings to Specification.*

Packing-materials. — Cork ribbon, made by attaching strips of cork to a continuous backing of fabric, is stated to be applicable, among other purposes, for packing.

9346. Allison, H. J., [*Robinson, A. S.*, and *Schell, A.*]. June 24.

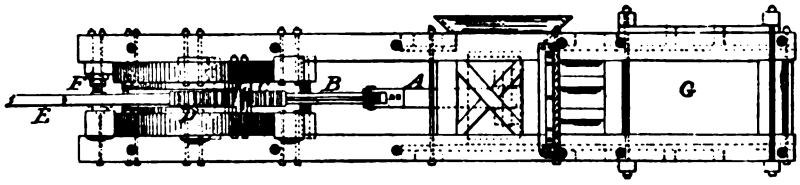

Baling-presses.—The Figure shows a side elevation of a sweep lever baling-press. Hinged to the rear end of the platen is the platen arm A pivoted at its opposite end to short lever B. The latter has a short limb C of semi-elliptical form with teeth on its face edge, gearing with a semicircular toothed edge of the short limb D of the sweep lever E. These operate to thrust the platen forward with a gradually-lessening speed but with increasing force. A friction device F is provided between the frame of the press and the sweep lever to prevent rebound of the latter. The baling-chamber G has open sides to admit any desired number of bale bands, and the vertical inner sides of the bottom sills and top plates of the frame project inward from the horizontal linings to guide the compressed material and prevent buckling. The side walls of the platen chamber are provided with elastic retaining-dogs to hold the compressed material from moving back.

9350. Haddan, H. J., [*Schlüter, C., Forster, C.*, and *Long, O.*]. June 24.

Wrapping and packing materials.—Rows of tubes of hay or other fibrous material are secured at intervals to sheets of paper, linen, or other flexible material, and used to form an envelope, wrapper, or cushion, according to the manner of application. The tubes may be formed and fastened to the sheets in various ways.

(*For Drawings see next page.*)

Digitized by Google

9350.

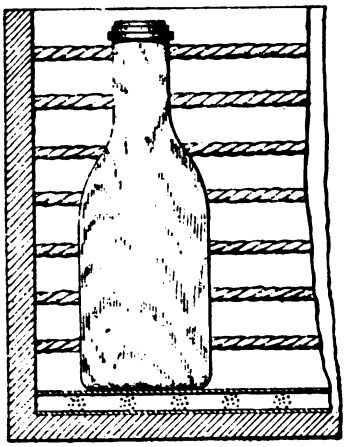

10,324. Clark, A. M., [*Baumgarten, C.*]. July 18.

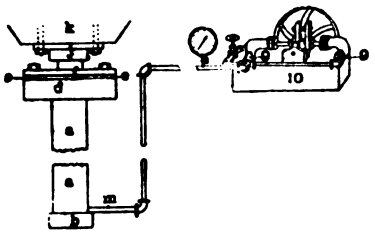

Baling-presses.—Relates to a hydraulic press for baling cotton. A side elevation of the press is shown with an ordinary force-pump 10 and check valves 9 connected therewith. A simple tube *a*, screw-threaded at each end, is closed hermetically at the lower end by the cap *b*, and has a strong recessed collar *d* screwed on the upper end. Within the recess of the collar is placed a ring of elastic packing pressed down by the gland *f* provided with stud-bolts *e*. In the tube *a* is fitted another tube to serve as a ram, this inner tube being closed at the ends by plugs. On the head of this ram is seated a metal cap or bolster *j* to which is attached the follower *k*. A strong coiled spring is arranged under the ram to prevent the latter falling below and closing the supply pipe *m*.

10,585. Day, St. J. V., [*Swan, P. S.*]. July 25.

Wrapping-materials.—Cloth to form sacking &c. for bags, packs, wrappers, or coverings, is covered with sufficient paper pulp mingled with size to make it adhere and form a skin or coating, and is then passed through the pressing, drying, and polishing rollers of a paper-making machine. One or both sides of the cloth may be papered.

11,084. Gates, T. Aug. 9.

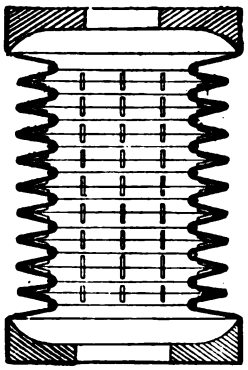

Sacks and like bags.—Relates to flexible bags, sacks, or bottles for containing oil and other liquids. The receptacle is made of goldbeaters' skin or similar material, and in the form of circular bellows. It is prevented from bulging by strings in the hollows or depressions, and from expanding too far longitudinally by webs or filaments inside. The Figure shows the reservoir of a pressure lamp, the ends being made large to prevent contact of the folds with the sides of the lamp.

11,357. Costa, A. E. da. Aug. 16.

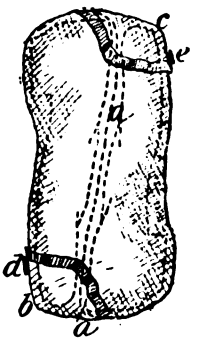

Bags for boots, slippers, &c. The bag is formed with a central partition *a*, and mouths *b* and *c* on opposite sides and ends. These are closed by suitable flaps secured by buttons *d* and *e*, or otherwise. The bag is intended for packing boots &c. in travelling trunks.

11,527. Borns, G. M. Aug. 22.

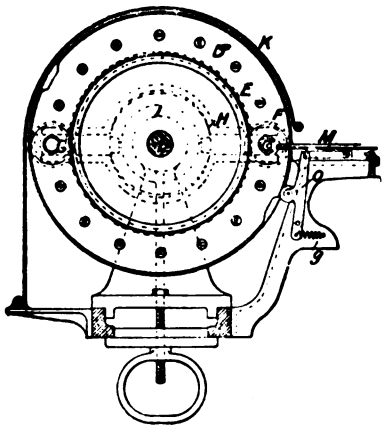

Wrappers, applying to newspapers and the like.—On the shaft B, at both ends, are fixed concentrically a pair of spur-wheels E and a pair of discs D.

Digitized by Google

The spur-wheels engage with pinions F which revolve on spindles capable of sliding through the discs D, and provided with slots or grippers G at those ends of the pair nearer to one another. The newspaper to be folded and the wrapper are placed on the table M, which is moved towards the grippers by the action of the spring *g* on the lever O. The pair of grippers G takes up the paper, which by the rotation of F is rolled round them, and becomes ultimately so bulky that the gummed end of the wrapper is fastened by being pressed between the cover K and a drum placed loosely on B. By means of the oscillating lever H actuated by the cam I the grippers now move apart and the wrapped newspaper falls into a receptacle. By this time the shaft B will have made half a revolution, and so the next pair of grippers will take up another paper and wrapper, and so on as before. A simpler arrangement, with one disc and one or more grippers, may be adopted.

11,910. Lake, W. R., [*Elkan, A., Lande, B.,* and *Frank, H.*]. Sept. 2.

Bale ties.—Bands for binding or securing boxes and the like are formed of twisted wire, and at intervals suitable eyes or holes are left for nails. The direction of the twist of the band is changed at each eye, *i.e.*, it is alternately right and left hand; this is done with the object of keeping the eyes in the same plane, or approximately so.

12,229. Lewis, G., [*Drewett, T.*]. Sept. 10.

Baling-presses.—The follower is pressed downwards or upwards by toggle-joint levers *b*, *c* actuated by the piston or ram *m* of a fixed or oscillating hydraulic cylinder *g*. The boxes *k*, *k* either revolve upon the column *l* or are fixed thereto. In the latter case the sides of the boxes are continued to the press head B and are formed by long plates which also act as and take the place of the ordinary columns.

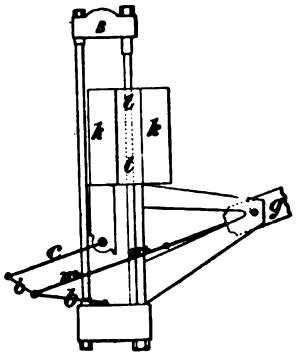

12,230. Dack, W. M. Sept. 10.

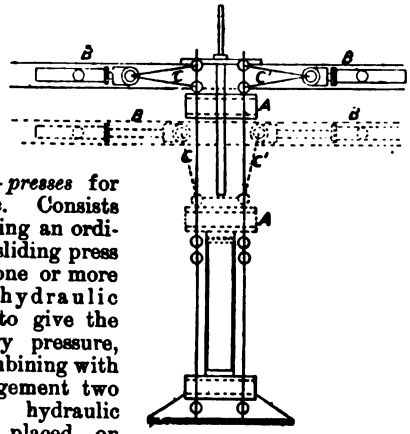

Baling-presses for cotton &c. Consists in employing an ordinary or a sliding press box with one or more central hydraulic cylinders to give the preliminary pressure, and in combining with this arrangement two oscillating hydraulic cylinders placed on opposite sides of the press to give the final pressure, the ram of each being connected to the centre of a toggle-joint, one end of which is connected to the follower and the other to the fixed bottom or top of the press. The Figure is a diagram showing one of the modifications described, in which the cylinders, toggles, &c. are fixed to the upper part of the press and force the follower A downwards. In this modification the hydraulic cylinders B, actuating the toggles C, C¹, are mounted on an independent frame which is either stationary or movable. The full lines in the Figure show the follower, toggles, &c. in their highest position, and the dotted lines show them nearly at the end of their travel.

12,666. Edge, W. Sept. 22. *Amended.*

Parcelling washing-blue &c.—Blue or other colour for bleaching, dyeing, and domestic use is packed or wrapped up in a bag A of woven fibre provided with a double-ended handle B, the neck of the bag being tied around the handle above the lower knob. In some cases the handle may be dispensed with, the neck of the bag being long enough to afford a convenient grip.

13,170. Fewster, P. Oct. 4.

Baling-presses for hay, straw, and other materials. A table A is fitted with an upper framework B, C, D, the top and front portions of which are hinged to the back and lower portions respectively. A

Digitized by Google

platform C, actuated by a threaded screw nut revolving horizontally with a bevel-wheel E, to which rotary motion is given by a pinion-wheel and lever handle F, slides up and down and compresses the hay, straw, or other material against

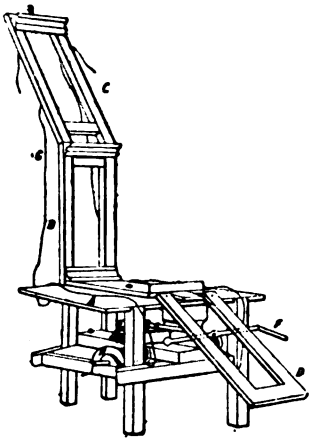

the framework. When the hay &c. is sufficiently pressed, it is bound up by twine G wound on reels H fixed on the under part of the apparatus, the twine being hitched on to the top portion of the framework before the platform is loaded, so that it can be easily brought down in readiness for tying.

13,548. Charleson, W. Oct. 14.

Packing-materials.—Relates to a composition for coating packing-paper or other material to render it grease and damp proof. One pound of glue is soaked in the greater part of 40 fluid ounces of water, and then dissolved in the same water on a water bath. A mixture of ¼ oz. resin, ¼ oz. white chalk, ½ fluid ounce glycerine, and a little water is then added. China clay may sometimes be added in addition to or instead of the chalk, and the varnish coloured in any suitable tint.

13,561. Howard, H. P., Jones, S., and **Jones, F.** Oct. 14.

Wrapping-materials.—Relates to wax paper, for wrapping sweets, biscuits, soap, tobacco, &c., which has hitherto been merely plain waxed paper. The sheets are first printed in one or more colours, either by letterpress or lithography, and are passed through a bath of hot wax. The superfluous material is then removed by pressure or by passage through heated chambers.

14,748. Amos, M. Nov. 8.

Baling-presses.—According to the modification of the invention shown in Fig. 1 the apparatus consists of a pair of bars A, B kept parallel by the sliding sockets *a*, *b*, but capable of sliding over each other in these sockets. One bar A is pierced at suitable intervals throughout its length, while upon the other bar B is formed an ear *c* from which depends a link *d* into which takes the hook *e* of the lever *f* employed to actuate the bars which under one method are coupled to platforms, frames, &c. placed above and below the material to be compressed. The lever *f* is furnished with a spring pawl *k*, the spring of which tends to tilt the pawl so that its lower notched end enters the holes in the bar A as they are brought opposite it, whereby the pawl serves as a means of maintaining the bars approximately at the position to which they have been forced, while the spring pin *h* is withdrawn for insertion in a fresh hole for the purpose of further compressing the material. Figs. 2 and 3 show in elevation and plan a modification adapted for compressing materials enclosed in a chamber or receptacle. The perforated bar A is anchored at its lower end in the floor, or in a frame upon the floor, and is partially embraced by a socket formed in the upper end of a forked bracket-like bar B corresponding to the unperforated bar previously described. This bar B is fitted with a spring pawl *k* and stands on a platform C surmounting the mass of material. The hand-lever, which is suspended from a link *d* depending from the compound bar, is actuated to compress the mass by the exertion of a downward stress on the platform. After being compressed to the desired degree at one point the material is similarly acted on at other points, there being a sufficient number of anchored bars disposed as desired in the receptacle.

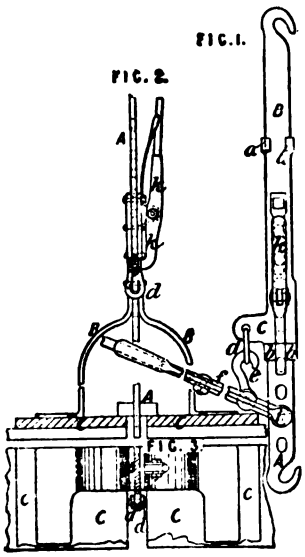

14,860. Cheswright, C. Nov. 11. *Drawings to Specification.*

Wrapping-materials.—Relates to metal foil for wrappers or coverings for chocolate &c. A dull granular pliable foil is obtained by beating a number of sheets by a power hammer.

14,970. Whiteman, W. T., [*Clawson, C. C.,* and *Thurber, Whyland, & Co.*]. Nov. 13. *Amended.*

Packeting and filling granular &c. substances.—Relates to an improvement on the invention

Digitized by Google

described in Specification No. 5195, A.D. 1882, for weighing and packing granular and pulverulent substances. For granular substances the hopper E is of a rectangular section and is provided with shoots. For pulverulent substances the hopper is

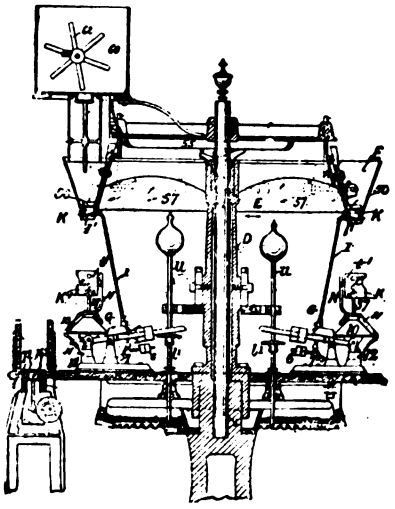

preferably annular, being fixed to D as in the other case, and provided with delivery openings and attachments as shown. The hopper is fed from the bin 60, in which rotates the stirrer 62, the supply therefrom being cut off by a float arrangement. When the machinery is set in motion the bar D rotates, and with it the hopper, and thus the material is moved towards the delivery openings by the inclined stationary blades 57. The material is pressed through the openings, and accuracy in weighing is ensured by the valve 50 operated on by the cam 55. To the weighted arm of the balance G is attached the rod I carrying the supply-gate I^1. The scale and beam are provided with suitable V-shaped grooves to rest securely on knife-edge bearings. The package-support K^1 is attached to the vertically-adjustable rod 37, and certain gauge-bars are capable of lateral movement, thus adapting the machine for packages of any size. The conical skirt 10 protects the scale from any deposit of particles from the material weighed. The scale is first held down by the latch N, and in this position the supply-gate closes the delivery opening. When now a package is placed on the support, it strikes against the finger t^1, thus releasing the latch from the notch 12 and allowing the scale to ascend, while the weighted end descends and opens the delivery opening. When the package is filled the scale again descends, and is expedited in its descent by the projection l^1 on the spindle u, which is moved upwards by the action of a cam underneath, while the beam end moves it downwards. A pair of brushes at the delivery opening and a stop underneath prevent the beam from rebounding. While the spindle u is moved downwards it is put into gear to actuate, through the medium of a ratchet-wheel and spring, the tapper 162, which taps from underneath the belt 72 on which the packages are placed. Centrifugal balance-weights 7 are used, and also supplementary nut-weights 6. A smaller machine may be used in which the hopper is stationary, the substance being filled into receptacles movable on the scale, through openings in which the substance is passed to the packages below. There are modifications in the catch and other parts to suit this arrangement.

16,020. Carson, A. Dec. 5.

Filling tea into boxes. The tea is packed into the box or boxes by means of one or more stampers A which receive a reciprocating motion from a disc C provided on its surface with a cam groove *c* in which friction rollers on the arms F attached to the stampers work. The disc is adapted, by means of a groove and feather arrangement, to slide on a vertical shaft D, which receives a rotary motion from the horizontal shaft H, and thus, as the tea rises in the box, provision is made for the throw of the stamper diminishing. The nut K, with friction rings, serves to connect the disc to the vertical shaft with the requisite tightness. The stampers may be perforated for the tea to pass through, and for its more even distribution the table on which the box is placed may rest on springs. When the box is packed the disc and stampers may be lifted by means of the screw shaft N worked by the hand-wheel P.

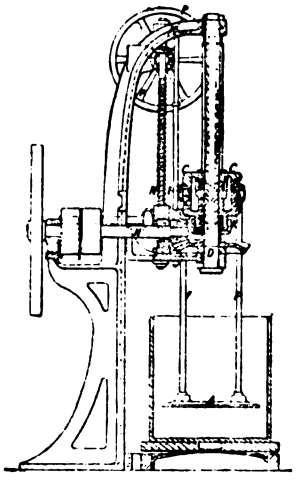

16,295. Dalziel, D. Dec. 11.

Paper and like bags.—Relates to a method of closing the mouths of paper bags used for the transmission of samples of grain or other produce, and consists in providing a flap A on the front portion in the position shown, the bag at first being open along B C and C D. The upper end is doubled about the line E C so that the corner B comes over the point D. It is then doubled about the line D F and, finally, the flap A is turned in under the four thicknesses, as shown in the second Figure.

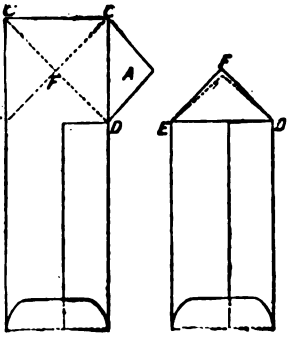

Digitized by Google

17,081. Dick, J. Dec. 31.

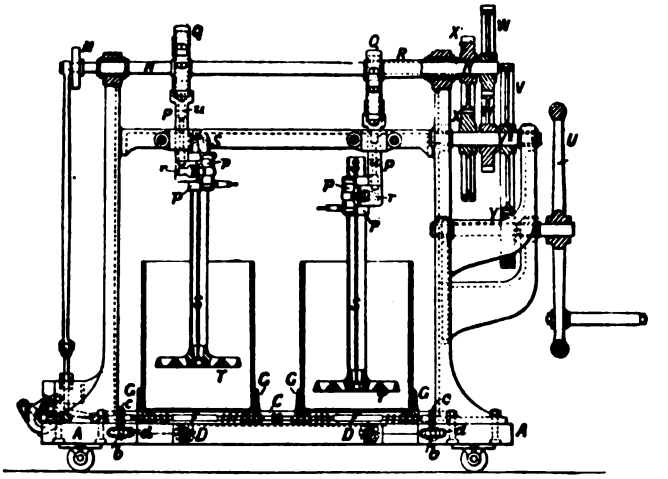

Filling tea &c. into boxes. The apparatus is supported on a platform A resting on wheels and supporting a second platform C on which the boxes rest. The boxes are secured by the clamps G adjusted to a box of any size by the right and left handed screw F worked by a handle on the worm *b* in gear with the worm-wheel *c* keyed on the screw shaft F. The slot *d* admits of oscillatory motion of the piece *c* on the wheel D, which is effected by a ratchet disc connected to C at one end, and worked by a crank disc M on the main shaft N. By this means every portion of the material to be packed will be brought under the perforated stamper ends T. The stamper arms are in two parts S and P, the former passing through a box arrangement attached to the lower part of the latter as shown. The upper end of the arm P is connected by a strap Q to a cam on the shaft N, or on the sleeve R if desired to pack two boxes independently of one another. The main shaft and sleeve derive motion from the hand-wheel U actuating the spur-wheels V, V¹, W, W¹, X, X¹, as shown. To a bracket on the lower part of P is attached a pawl and stop in gear with teeth on one face of the arm S. This is normally the only connection between both arms. When, however, the stamper is moved down to within a short distance of its extreme limit, a small cam in connection with that which works the arm P actuates an inner rod *u* passing down through P, thus pressing the frame *r* against the action of a spring and causing shoes to grip the arm S, thereby effecting a secure attachment of the arms to overcome resistance, to be again disengaged when the arm rises, the pawl and stop becoming the only connection. As the box gets filled the stamper grows shorter by the lower arm remaining stationary while the upper arm slides over, the pawl and stop being at the same time swung round out of gear, and brought back again by the action of a spring.

A.D. 1885.

1005. Cummins, A. E. Jan. 23.

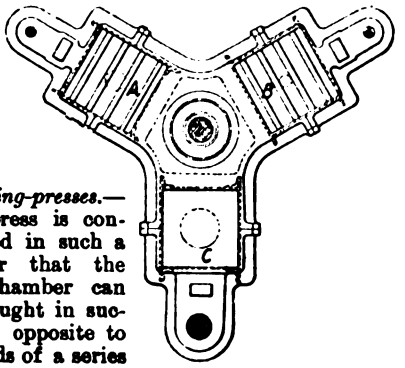

Baling-presses.—The press is constructed in such a manner that the bale chamber can be brought in succession opposite to the ends of a series of fixed feeding-boxes A, B, C, each with a separate ram for forcing the contents of these boxes into the bale chamber, which is fitted with grids or fingers to retain the material therein when it has once been forced into it.

1648. Andrew, F. Feb. 6.

Bale ties and bale-tie fasteners.—The ends of the iron bands are slotted longitudinally, and then a strip of metal bent T shape on itself is passed through and the ends turned over on the principle of an ordinary paper fastener.

1878. Brewtnall, H. W. Feb. 11.

Bale-tie fasteners.—The ends of bale hoops or wires A, A, or like articles or materials requiring

Digitized by Google

to be joined, are passed through a case D in which is pivoted a bar C of oval or cam section. The ends of the hoop or wire pass between the surface of this bar and rests or cushions B, B, and on the

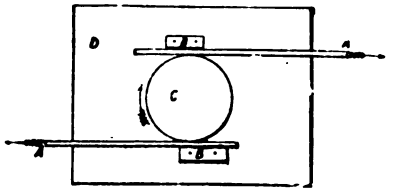

bar being turned as indicated by the arrow, in a direction tending to bring its longer axis between B, B, so that the ends of the hoop &c. are gripped, any further tension on the hoop &c. will but increase the grip. Loosening is effected by turning the bar in the opposite direction. The details may be modified.

1973. Johnson, J. H., [*Ripberger, G.*]. Feb. 12.

Sacks and like bags.—Relates to sacks or like receptacles for the preservation of provisions or analogous matter, such as bread, biscuits, lard, grain, seeds, groceries, druggists' wares, or stores, &c. The sack &c. is constructed of, or lined with, cotton, wool, or other fibrous material constituting a filtering-medium, the same being impregnated with substances capable of destroying or repelling injurious germs &c. The material of which the receptacle is made may also be impregnated with the same substances. The impregnating-liquor may be made by treating a mixture of castor leaves, laurel leaves, three-leaf leaves, green walnut shell, and gentian root with boiling water, the extract or solution obtained being filtered and salted. The impregnated sack may be lined with impregnated fibres, and a second sack, not impregnated, may be inserted, the whole being then stitched together. A short impregnated wooden cylinder is employed to assist in the closure and tying of the sack.

2105. Moore, J. T. Feb. 16. *Amended.*

Baling - presses. — Relates to presses suitable for baling and other purposes, in which the principle of construction described in Specification No. 5097, A.D. 1884, with respect to a press for ensilage, is adopted. The platen C is actuated through the toggle-levers D, E pivoted to nuts working on the right and left handed screw shaft P.

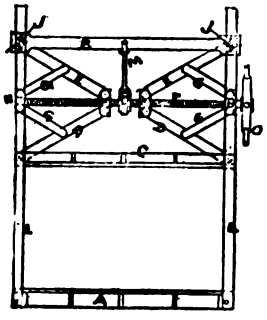

The screw shaft is worked by the hand-wheel O and the lever M, and is kept in position by links G, G connecting the middle point of the toggle arms with loose collars H. To adjust the size of the press the standards L are provided with a series of holes to receive the fixing-pegs J.

2239. Middleton, W. Feb. 18.

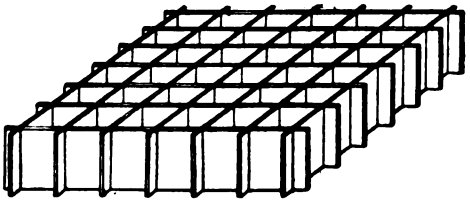

FIG. 2.

Frames for packing eggs &c. in boxes. In each compartment of a specially-constructed box are superposed a number of trays with partitions of cardboard between. The trays are made up of a number of cardboard pieces having slits along one edge, as shown in Fig. 2, to receive corresponding cross-pieces, the whole when put together forming a number of cells in each of which an egg is placed. By limiting the number of cells in each tray to, say, a dozen or a multiple thereof, the direct counting of the eggs will be obviated.

2616. Moore, J. T. Feb. 26.

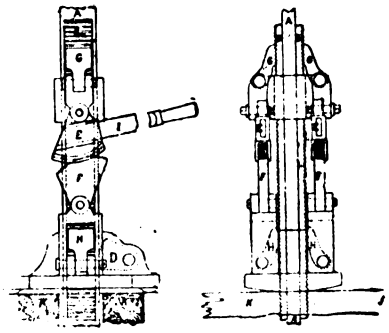

Baling-presses for ensilage and other material. Consists in the application of toothed sectors for obtaining pressure. The Figure shows a method of applying the invention to an ensilage press. E, F are the toothed sectors, a pair being placed on each side of the perforated bar A, which passes through the boards K covering the ensilage and is secured to the bottom of the silo or stack. The sectors E are pivoted to the upper part or head of the press, and the sectors F are pivoted to the

Digitized by Google

lower part or floor-holder, which rests on the boards K and slides freely on the bar A in a downward direction, but is prevented from rising when the pressure is removed by the pawl D. On each side of the bar A racks B are fixed, in contact with which are pawls H attached to the floor-holder and pawls G attached to the head of the press. To actuate the press the lever-handle I is depressed when the longer sides of the toothed sectors are pressed together and force the floor-holder down one tooth lower on the rack. When the lever I is raised the shorter sides of the sectors come together and the two upper pawls sink one tooth lower, so that the top and bottom pawls sink alternately as the handle is raised and lowered. When a continuous pressure is required the racks B are dispensed with and the perforations in the bar A are made closer together, and the method of operation is slightly modified.

2979. Louvot, E. P. March 6.

Packing-materials.—A composition is made by filling with tar the pores of dry absorbent bodies such as cardboard, paper, rope, canvas, &c. On placing tar products in contact with the bodies and creating a vacuum the tar settles in the pores of the bodies. The material is then subjected to pressure, and the volatile and liquid portions of the tar are afterwards expelled by graduated heat. The product is stated to be impermeable, uninflammable, and acid-proof, and capable of application in making packing or covering materials.

2981. Harris, H. March 6.

Baling-presses for trussing hay or straw. The press, which is mounted on wheels, has top and bottom platens C, C^1, which are moved to and from each other by right and left handed screw shafts D, D^1. The screw shafts are worked by rotating the shaft *b* by a handle thereon or by other means, which motion is communicated by intermediate bevel &c. gearing to the screw shafts. At the ends of the press are partitions B, B slotted so as to allow the movement of the platens, and at the sides are hinged doors. For lashing the compressed truss the platens are provided with slots *g*, g^1, as shown.

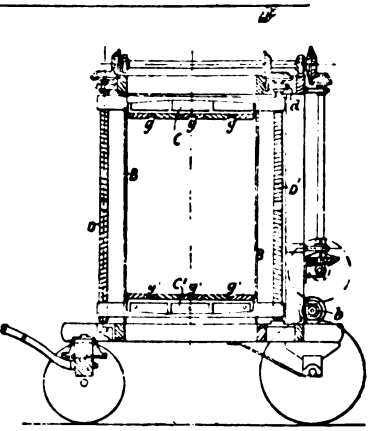

3038. Lake, H. H., [*Baker, J. M.*]. March 7.

Packing-materials for glassware, crockery, &c. A sheet or roll of "chemical wood fibre," produced by boiling wood chips with caustic soda *in vacuo* or otherwise, is embossed while damp, to form bosses &c. as shown in section by the Figure. Additional strength and stiffness can be obtained by treatment with glue and glycerine or other suitable composition. The composition may be applied between two sheets of the material, which are then embossed while the adhesive substance is still damp.

3187. Boult, A. J., [*Edwards, A.*]. March 11.

Wrappers.—Relates to butter packages applicable as dishes. Two similar dishes A, A^1 of glass, wood, metal, paper, or other material, each containing when filled a given quantity of butter, have apertures E in their bases fitted with stoppers, and are placed with their mouths together and secured in this position by means of a band C of paper, which fills a groove half of which is formed

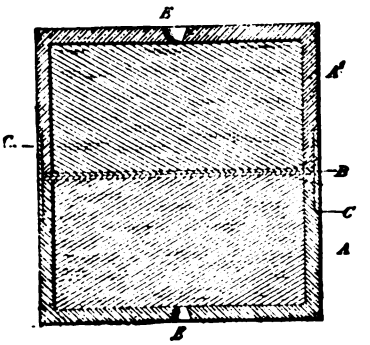

in the rim of each dish. The dishes may be made to contain different quantities of butter, or one of them may form a cover only.

Digitized by Google

3279. Shield, H., and **Howarth, J.** March 13.

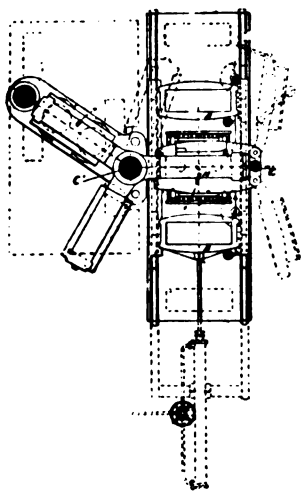

Baling-presses.—The pressing operation is divided into two parts or stages. The bale is partly pressed by one set of hydraulic rams, and the pressing completed by another set. In the modification shown, which is a plan of the apparatus, boxes B are each in turn moved by water or steam power over the preparing-rams, and over these are swung shallow boxes H. The preparing-rams now force the material from the former box into the latter, in which it is retained by passing a fork underneath, or by locking the lashing plate thereto. Both boxes are next moved aside, the shallow box, after the bale therein is partly lashed, being moved over the finishing-rams when the pressing and lashing is completed. It is provided that the one ram or set of rams is ascending while the other is descending. There are sundry improvements in details. Means are provided so that, when desired, the follower of the preparing-rams can be gradually lowered, and again that the boxes cannot be moved while the operator is dangerously near. There are improved glands to facilitate changing the leather. Lastly, to avoid dead pumping, a block arrangement is provided to be placed beneath the bale.

3501. Capel, H. C. March 18.

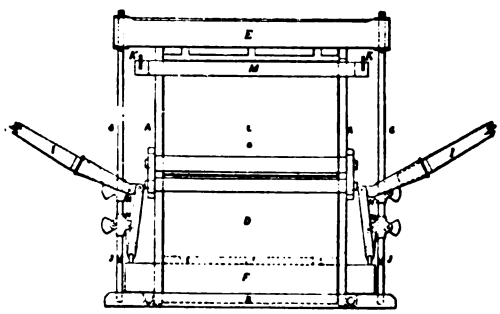

Baling presses.—Relates to a small box-press for hay, straw, rags, &c., worked by hand. The top and bottom of the press are provided with platens E and F. The upper platen E rests on the rods G hinged at J as shown, so that the platen can be moved aside for loading the press. The packing is effected by working the handle I, which is in connection with the lower platen by the link bars H, H. The grippers on the bar G, to which the handle and a link at each side are shown pivoted, are adapted to slide on the bar in an upward direction only. To facilitate the removal of the finished bale from the press, one or both ends A are pivoted at their base to the frame B, and the upper portions C of the sides are also movable, being pivoted as shown. When the box is closed up a cross-bar on the ends fits into grooves on the bar M, and the whole is then secured by retainers K pivoted to the ends.

3697. Abell, W. P. March 23.

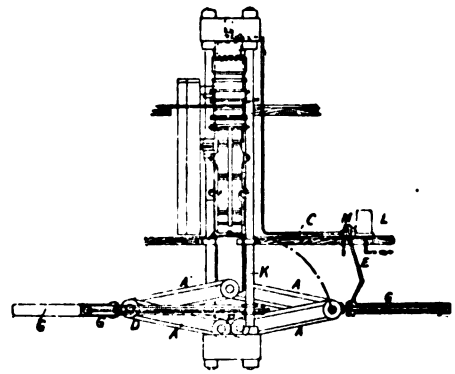

Baling-presses.—The baling is effected by the levers A, A^1 connected to and actuating the follower K on the toggle-joint principle. The cylinders G, G are braced together, and are capable of an upward and a downward motion so that the plungers which they carry and which actuate the toggle-levers act constantly in a line passing through cylinders and joints of levers. The cylinders are supplied through the swivelling pipe E with the gas or liquid which actuates the plungers. Instead of two cylinders one alone may be employed. It is moreover provided that the potential energy of the levers is utilized in forcing the waste liquid or gas from the cylinders back into the receiver L^1, from which the pump is supplied. Or, by a special arrangement, the energy of the levers may be transferred directly to the pump by being employed to assist in lifting an accumulator in connection therewith. The top of the press is in connection with the pressure and exhaust valve M by the pipe C, and so can be pressed upwards between guides to permit of lashing the finished bale. The sides of the box at the lower end are adjustable so as to admit of being moved aside to give admittance to the toggle levers. Suitable catches hold in place the boxes containing the material to be packed.

4195. Lloyd, F. G. April 2.

Packeting and filling tobacco &c.—Relates to an improvement on apparatus described in Specification No. 2365, A.D. 1880. The tobacco or other

Digitized by Google

substance is placed on the paper in which it is to be wrapped, in the bottomless buckets B having the inclined sides and lips at the top as shown. The buckets, which are connected by an endless

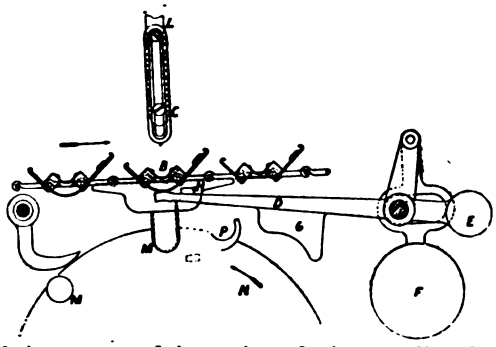

chain, are moved intermittently in one direction, while the wheel N carrying the moulds M is moved intermittently in the opposite direction; it is so arranged that during the period of rest each of the buckets will come in succession over the moulds, and then the plunger L will press the package into the form, where it is folded as described in the above-mentioned Specification. The sliding piece C attached to the plunger grips the paper, pressing it against the lever D, and thus preventing the package from moving aside on its way to the form. The lever, which in the first instance is moved upwards to the stop H by the folder P pressing against the cam G, releases the paper when on the descent of the plunger the arm of the pivoted weight F passes the vertical centre line.

4689. Baynes, F., and **Whalley, J.** April 16.

Sacks and like bags. —A double cloth *a* is woven with two separate selvages *d*, *d* and a double selvage *c*, and with transverse strips *b* where the two cloths are woven together. By simply cutting the latter strips along the width of the cloth, bags with the mouth *d*, *d* and bottom *c* will be produced.

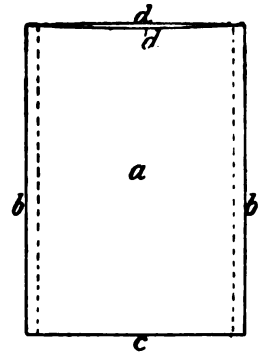

5115. Coates, T. April 24.

Paper and like bags, making. The paper web drawn from a roll by rollers is printed and creased by blocks actuated by cams. Paste is applied by a suspended roller and box which are lowered by a cam. The web, cut into proper lengths by shears, is delivered to a former, which consists of a series of rectangular blocks M fixed to a frame B, on a shaft which revolves intermittently. Folders N are pivoted at D to the frame B. Adjacent folders are joined by links G jointed at E and at C to radial rods K, which are pulled towards the shaft A by the springs S, thus keeping the folders in the position shown at X. Pins U on the rods K slide on a fixed cam and close the folders as shown at Z. The upper portion of the forming frame revolves between fixed side plates provided with hinged plates, so that when a blank enters at X the side plates fold the sides of the blank and the hinged plates,

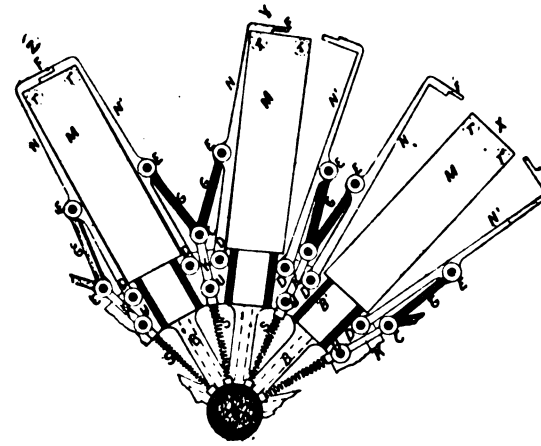

actuated by the cam, fold the underside of the blank. The bottom of the bag is partially formed at Y and Z by the formers N. After half a revolution the folders are released as at X, and then rollers assisted by internal rollers *r* release the bag from the former M and deliver it between flattening-plates. A moving plate in conjunction with the flattening-plates finishes the bottom. The completed bag is pressed by delivery rollers.

6169. Cheevers, J. May 20.

Packeting and filling granular &c. substances in connection with weighing-apparatus. There is an extra lever A above the main beam B to automatically open vertically-sliding gate-valves carried by the frame C, so that the seeds, meal, sugar, coffee, &c. can only pass when the weight end of the scale is depressed. When the pan D overcomes the weights it sinks, and the frame C

Digitized by Google

falls by its own weight, shutting off the supply. The pan D is pivoted and when charged is tilted by the operator, the seed falling down the feeder E into a bag. At the back of this feeder is

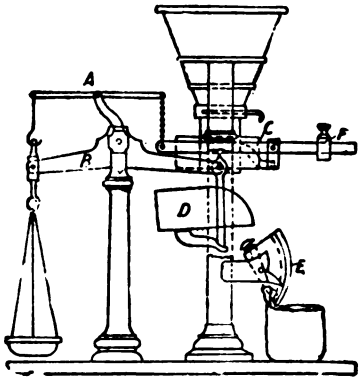

a small chamber for water which drips through porous material, and serves to moisten the gummed flaps of the bags. The working of the frame C is adjusted by means of the weight F. In some cases the bag is placed on the scale-pan, the feeder E being then carried by an upright on the same. There may be a catch to keep down the pan until ready for a fresh charge.

7267. Mayos, T. T. June 15.

Baling-presses for binding or trussing straw. The apparatus consists of a number of hollow "receivers" (one of which is shown detached) fixed rigidly to a plank sliding on rollers in a frame. To the same plank are fixed upright boards or "dividers" for regulating the length of the truss. One, two, or three "receivers," as desired, may be used for each truss.

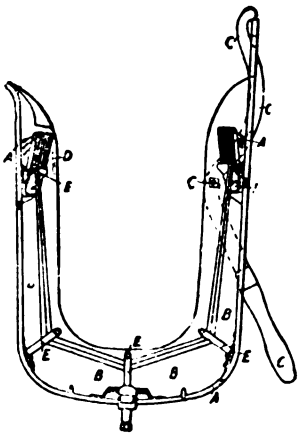

Each receiver consists of a piece A of bent iron, to which two plates B are fixed. In the Figure one of the plates has been removed to show the interior arrangements of the receiver. Fixed to one of these plates B is a bent lever C, worked by hand, for compressing the straw. A catch D is provided for holding the end of the lever, while the truss is being tied. E, E are spring clips for holding the spring until required.

7593. Bamber, J. June 22.

Baling-presses for hay &c. The platen B, which moves between four uprights D, consisting of hollow tubes resting on the platform A, is actuated by the screw E passing through a nut on the crosshead F. The screw is worked by the handles H, but, to cause the quick ascent of the platen when the trussing is completed, the screw may be worked by a rope L passed round the hub of the handles, as shown. The grooves G on the platform and platen are used for lashing.

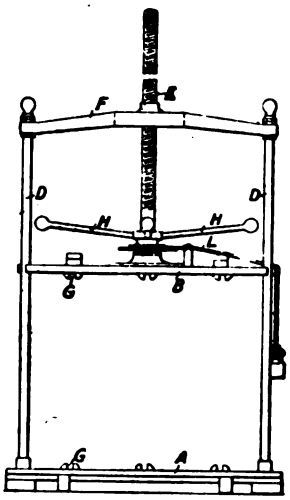

7850. Arnold, C. H. June 29.

Packing-materials.—The oil or similar substance, by which the fabric of a certain class of waterproof packing-material is made waterproof, often finds its way to the goods packed therein and so injures them. The invention consists in remedying this defect by coating the waterproof material on what is to be the inner side with greaseproof paper, which is applied by rolling the paper upon the material whilst the waterproofing-substance is still in an adhesive state.

8089. Cluderay, T. July 3.

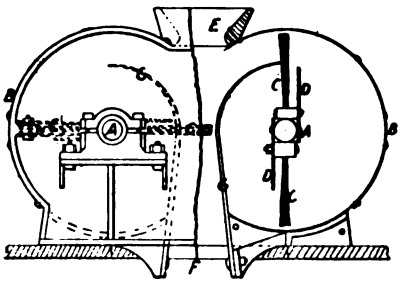

Sacks, cleaning. Two square shafts A, A revolve in a casing B, B consisting of two connected cylinders. Brushes C, C are bolted on the plates D, D carried by the shafts, the plates being slotted to allow the brushes to be adjusted when worn. The shafts are connected by spur gearing, so that, when one pair of brushes is horizontal, the other is vertical, and the shafts are revolved by a driving-pulley on one of them. One end of a sack turned

Digitized by Google

inside out being let down between the brushes through the opening E, the brushes remove the dirt and project it downward through the opening F; the sack is kept from being caught by either brush by the narrow iron guards G.

10,043. Johnson, J. H., [*European Paper Bag Machine Co.*]. Aug. 25.

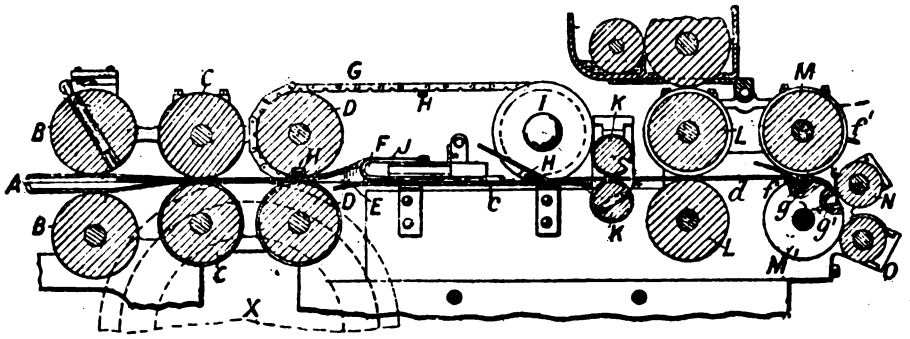

Paper and like bags, making. Relates to a machine for making satchel-bottomed bags. A tube, previously pasted, and formed and partially cut on a former A, passes between rollers B; the top roller severs the upper side of the tube. Feed rollers C pass the tube to rollers D which carry, by means of a chain G, knife folders H. A fixed spring finger E causes the blank to pass over a guide-finger F. The knife folder H enters a recess in the roller D and travels with the paper, creasing it by contact with the finger F. A strip J, fastened on the top of the guide-finger and folded under it, presses the tube. Rollers K hold the tube while the folder H when rounding the roller I leaves it. The rollers K completely sever the blank by means of an internal knife connected with a lever actuated by a cam and hooked bar which catches a pin on the pasting-rollers L. The blank passes between rollers M and M^1. The top roller M carries two blades f, f^1 and the under roller nippers g, g^1. The blade f^1 tucks the leading flap into the bite of the nipper g^1, and then the knife f and the nipper g^1 tuck the last flap. The nipper g^1 carries the bag under the wiper roll N, then releases it, and the nipper g carries it under a wiper roller O which doubles it upon itself, completing the last fold.

10,837. Wills, H. H., and **Rose, W.** Sept. 12.

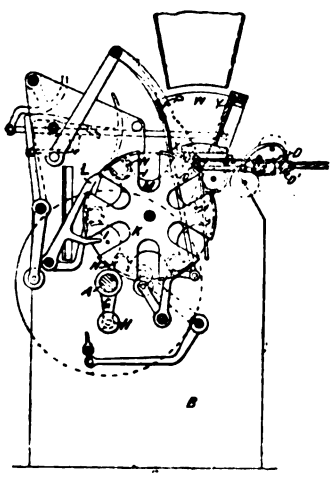

Packeting and filling tobacco.—The machine consists of a plate M, carrying a number of mould boxes N, of the form shown (in which the packets are formed), and rotated intermittently by means of the plate K provided with slots I to receive the roller H at the end of the arm G on the main shaft A, from which the various parts of the machine are operated. The plate is held firmly in the intervals by the detent L. The wrappers are fed between the rollers D, D, and are pressed into the mould boxes by the plunger P. The tobacco is fed into the hopper W automatically, is pressed against one side by the pusher plate Y, and is forced into the mould box containing the wrapper to receive it by the plunger P. The edge of the wrapper held between the last rollers D, D^1 is now released, and the other edge is held between the back of the hopper and a bar operated by levers and cams from the shaft A. The plate M being now partially rotated, the ends of the wrapper are lapped over each other, and both the tobacco and wrapper are rotated by pistons entering the ends of the packet so as to cause the wrapper to encircle the tobacco. The tobacco is then compressed by the pistons passing further into the packet. After another partial rotation the packet is acted upon by the folding and sealing devices. These consist of three frames, the upper carrying three pairs of folders for making the three upper folds at each end, and each of the lower carrying a pair of folders for the side folds, and a third folder for the last fold. This last folder closes upon a plate which, after the sealing-wax &c. has been dropped from a cistern upon the fold, turns up against the end of the packet. After the next rotation the finished packet is ejected from the machine.

Digitized by Google

11,119. Capel, H. C. Sept. 18.

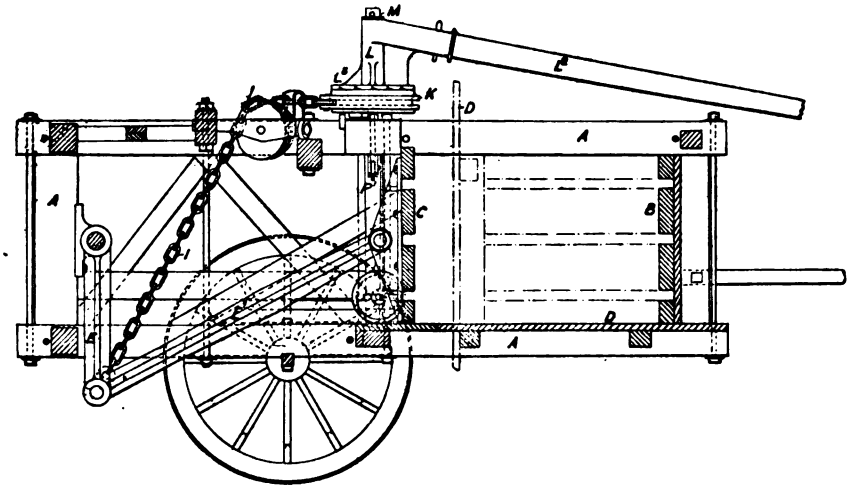

Baling-presses; bale ties.—A horizontal press, for baling hay &c., operated repeatedly by the continuous rotation of a shaft or its equivalent is described. The bed B and the table D on which the hay is placed are hinged to the main frame A so that they can be moved out of position to enable a horse to be harnessed to the press. The platen or follower C is worked by a toggle-joint E, E¹ connected by a chain I passing over a pulley with a drum K rotating on a fixed shaft M. A sleeve L mounted on the latter is provided with a socket for the reception of a pole L² worked by a horse moving continuously in a circular path around the machine. The drum and sleeve are connected by a sliding bolt carried by the former and arranged, when a hand-lever P¹ is depressed, to enter a notch in a flange L³ on the sleeve. The drum and sleeve are automatically disconnected by a projection on the framework arranged to withdraw the bolt at the proper moment. Means are described for locking the parts in position, when the follower is at the forward end of its stroke, until the bale has been bound. The drum K is shaped so as to ensure uniformity in the force exerted by the horse during the pressing operation. A device for twisting hay or other material to form bands or ropes for binding the bales is described; it consists of a hollow shaft rotated by suitable gearing. The hay &c., being fed into one end of the shaft by rollers, is twisted by the rotation of the shaft, and when it leaves the other end of the shaft it is wound upon a drum driven by worm gearing. The press may be provided with wheels for transport and a box for enclosing the material to be baled, and may be constructed to be worked by steam. Modifications are described as regards the arrangement of the chain and toggle levers. In some cases the chain may be dispensed with, the toggle levers being actuated by cranks.

11,587. Bradford, T. Sept. 29.

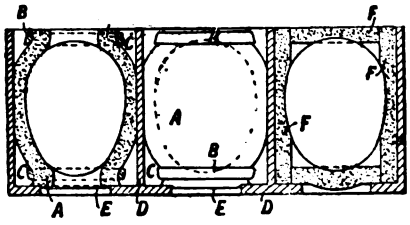

Frames for packing eggs &c.—Each egg is wrapped in newspaper or other suitable substance A, the ends of which may be held by rubber bands B, and then inserted in the holes C of a cellular or honeycombed block of wood or other suitable material D. The holes E are for the insertion of the finger to push out the eggs. The holes C may be lined with felt F. When the box is filled it is enclosed in an outer case, which may also contain butter, lard, &c.

11,990. Golding, W. Oct. 9.

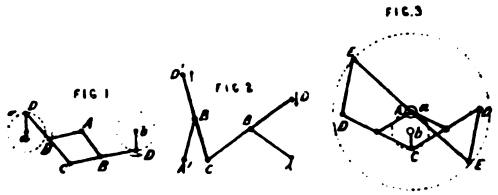

Baling-presses.—Relates to a system of crank &c. linkages, three forms of which are shown in the Figures, and which may be applied as pressure mechanism for compressing cotton &c. Two links A B, C D, pinned together at B, are termed a "claviger," and by modifications and additions, and combinations of two or more clavigers, mechanisms of many descriptions for the transmission and conversion of motion are constructed. In the case of baling-presses an arrangement similar to Fig. 2 is used; a small pressure with great range at D produces a heavy pressure with small range at D¹. The fixed centres A, A¹ may be in any relative position, and any number of clavigers may be employed.

Digitized by Google

12,375. Pocock, S. J. Oct. 16.

Frames for packing eggs, china, &c.—Packing-cases are fitted with trays, each formed of a wooden frame carrying two distinct layers of felt. The lower layer is plain, but the upper has either a series of X-shaped slits or holes cut through it to receive the articles, or is made with a series of hollows or corrugations by means of strips of wood as shown.

14,427. Gee, R. Nov. 25.

Baling-presses.—Consists of means for using over and over again the water which raises and lowers the tables of presses. The water forced out by the descent of the ram is discharged into a cistern from which it passes to a pump which forces it to the accumulator A fitted with a heavy weight C. The descent of this heavy weight forces the water

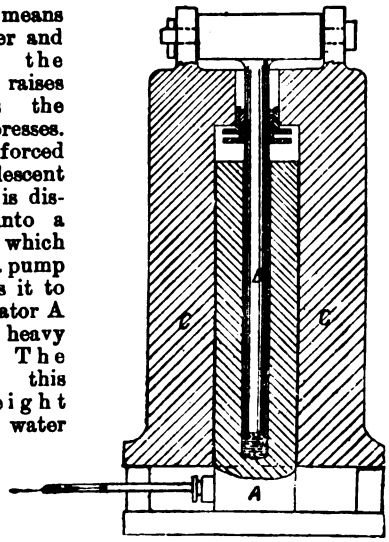

back into the cylinder and thus raises the ram. A double inlet and outlet valve actuated by a cam regulates the passage of water to the cylinder and between the cylinder and accumulator.

14,796. Lorenz, W. A., and **Honiss, W. H.** Dec. 2.

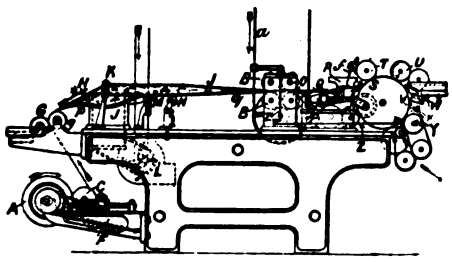

Paper and like bags, machines for making. Paper is drawn from a roll A by the rollers B, and guided by the cylinder C mounted on a sliding frame F. A border of paste is applied by a roller G. The sheet then ascends an apron H and is guided by two rollers K to an exhausted hollow former J. Rollers M fold the paper on the underside and a roller N presses the edges together, forming a tube. The sides of the tube are tucked in while on the former before reaching the rollers B. Rollers O then cut the tube into lengths and deliver the blanks to a reciprocating carriage P provided with a presser plate Q. As the carriage advances two tuck arms, with triangular ends having similarly-shaped wire loops hinged to them, actuated by a switch cam and levers, tuck in the ends ; the loops are then raised by bars. The part to form the bottom has now a rectangular section projecting upwards, if struck by a vibrating finger *f*; folding-plates R, actuated by segments of wheels and cams, then fold down the sides. The partially-formed bag is then passed to a cylinder S, provided with central and side nippers, which carries it under a pressing-roller T and under a pasting-roller U. When the central nipper is released the bag passes above a bar V ; a bifurcated blade W then folds a flap and delivers the bag to a rocking box X which completes the folding. The bag is afterwards pressed. In the absence of a bag a feeler Y causes the rod Z to place the strap *a* on a loose pulley.

14,885. Windust, C. C., and **Hutchison, A. L.** Dec. 4.

Packeting and filling tea &c.—The package of lead &c. to receive the tea or other goods, raw or manufactured, is formed on a special mould having a funnel at the top to facilitate filling, and a guide at the sides to regulate the size of the package. There is, besides, a special rest on which the mould is placed while the package is being formed. The mould, with the package on its end, is next placed in a block and the material is filled in, the whole being then placed on a table filled underneath with sawdust to deaden the noise of ramming. The ram G attached to the pivoted arm A worked by the treadle F is now brought to bear on the material, which when sufficiently packed is pressed down by the ram while the mould is being withdrawn. B is an india-rubber spring by which the ram is automatically lifted.

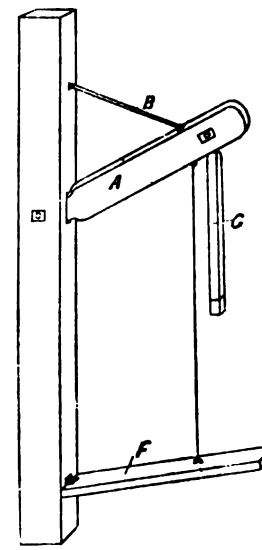

Digitized by Google

15,778. Frank, H., and **Hochstadte, A. F.** Dec. 22. *Drawings to Specification.*

Bale-ties.—Relates to metal bands or straps for binding and securing boxes and the like. The band is formed with projecting longitudinal stiffening-ridges, having a depression along the centre which is perforated to receive the nails. The extreme ends of the bands are also turned under.

A.D. 1886.

126. Leinbach, F. W., Wolle, C. A., and **Brunner, E. H.** Jan. 4.

Paper and like bags, making. A roll of paper A is formed into a tube with tucked-in sides by a former B consisting of a series of plates. A thumb notch is cut in the upper ply by a cutter C, which is prevented from clogging by means of a lever which ejects the cut paper. As the tube is drawn forward it passes over a plate D and beneath a pressing-bar E, which is grooved so that it will not press the folds, to feed-rolls F, which are also grooved. The bottom fold, however, is pressed by spring fingers G. The tube passes through and is cut into blanks by the severing-rolls H, the upper of which carries the cutters. A blank is then delivered to a reciprocating table K, and a presser-plate *h* comes down upon it and causes its mouth to gape. The front end of the blank is held by a nipper N, while a pair of side tuck folders *f*, with triangular ends, having similar wire loops hinged to them, enter the tucks as the carriage moves forward. The wires are turned over by fixed rods, and thus fold the upper ply backward upon itself. The folded blank is now of diamond form, and is pressed by a plate L attached to bars M actuated by cams. During the previous operation the blank, having been caught by a central nipper on a revolving drum P, continues to move forward. Two pairs of side nippers act upon the sides of the blank where the bottom is to be folded. The central nipper is then released, and the flap previously pasted by the roll R passes above a fixed bar S and is folded between the bar and drum, and then delivered to two plates T which form the last fold. The bag is finally pressed between the drum P and a roller X.

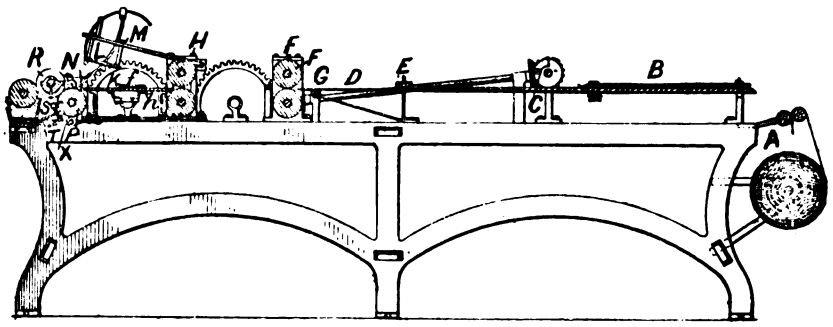

831. Belcher, F. C. Jan. 19.

Paper and like bags, making. Relates to the cutting and folding mechanism. A paper tube formed as usual on a former A passes through the rollers B, B¹. The upper roller has a cutter actuated by a lever and fixed cam, which makes a central transverse cut on the upper side of the

Digitized by Google

tube. Feed rollers C, C cut two parallel longitudinal slits at the ends of the previously-cut slit and pass the tube to rollers D^1. The lower roller D^1 is provided with a longitudinal cutter at each end, which severs the upper side of the tube, leaving the middle portion of the lower side uncut. The upper roller D^1 and roller D^2 carry, by means of chains G, knife folders along with the tube. The upper portion of the tube is deflected upwards, by means of a spring finger E, upon a vibrating finger F, actuated by a bar *g*, a lever *h*, and a cam K. The finger F, in conjunction with the folder, folds part of the bag bottom in taking up the position shown by the dotted lines. Pressers N and O, reciprocated by levers and cams, press the fold, which is then pasted by the upper roller P and pressed by the lower roller P. The bag is finally severed and folded. The various rollers and shafts are driven by spur gearing from the shaft A^1.

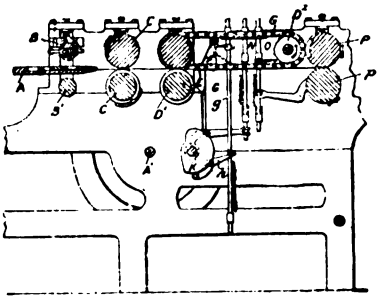

---

856. Anderson, C., and **Bumsted, F. D.** Jan. 20.

Paper and like bags, making. Relates to a machine for making square-bottomed paper bags, the bottoms of which are not folded in the usual manner, but as shown in Fig. 3. A blank is cut from the web and folded round a mould plate, corresponding in form to the interior of the flattened bag, to form a tube. The mouth *a* is then opened and the sides *b* deflected inwards, causing the paper to assume the form of a square box resting upon the mould plate. The sides *b* are held down while the front flap *c*, and immediately afterwards the back flap *d*, are folded inwards, the parts being then in the position shown in Fig. 3.

FIG. 1.

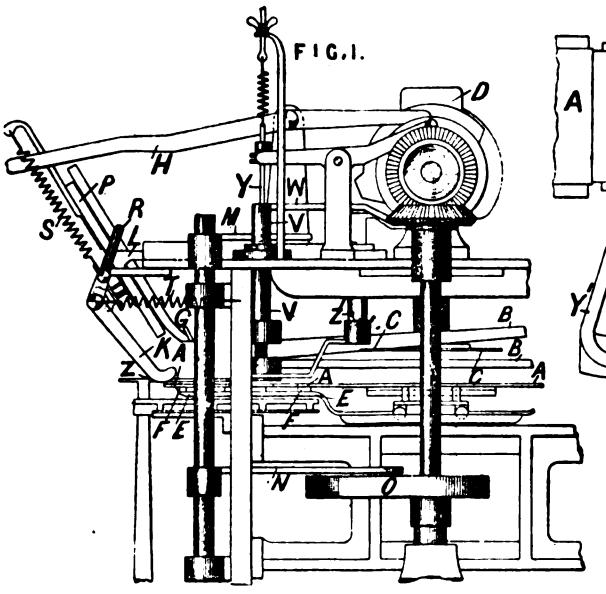

FIG. 2.

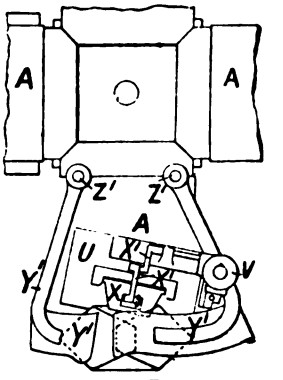

FIG. 3.

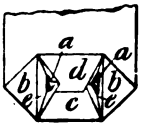

The bag is completed by folding the ends *e* towards and down upon the centre of the bag bottom. Fig. 1 shows a part elevation of the back of the machine, and Fig. 2 a part plan of the mould plates with side and back flap folders. The web is pasted, fed to the mould plates A, and cut into blanks by a pair of cutters B, as described in Specification No. 5372, A.D. 1881. The blank is held upon the front mould plate by a plate C, while two oscillating arms, pivoted to the bracket D and having notched folding-blades, fold the edges of the paper under the mould plate, thus forming a tube, the pasted edges being held at intermediate points by flappers E, having studs F projecting through the notched folders. The tube is carried through a right-angle, and its mouth is opened by a forward and rising movement of a fork G, which is afterwards depressed by a lever H to crease the paper for the back fold. In the meantime arms K, moving in the opposite direction to the fork, deflect the sides *b*, Fig. 3. The fork G is moved horizontally, by a slide L operated by levers M, N from a cam O, and along a guide P by a lever H and spring S. The arms K are jointed to a bracket and connected at their upper ends R to move with the slide, and are held against the latter by a spring T. A gauge-plate U, which is partly rotated by a sleeve V with cam lever W, regulates the amount of paper raised by the fork and carries the back flapper X. The flapper is operated by cranked levers X^1 connected to a reciprocating rod Y passing through the sleeve V. The front flap is folded by a slide Z, and the end flaps are folded by arms Y^1 carried by vertical shafts Z^1. The completed bag is carried to taking-off rolls mounted on a

Digitized by Google

swing frame. The mould plates radiate from a vertical shaft and are intermittently rotated through a right-angle by a geneva stop mechanism, and the various other motions are derived by suitable cams and levers.

1472. Hansen, H. G., and **Mackenzie, F.** Feb. 1.

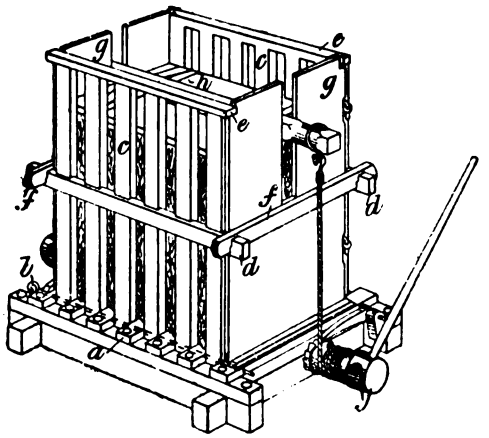

Baling-presses.—The bottom of the press is made up of a number of bars *a*, between which and pivoted thereto by the pin *b* are similar uprights *c* forming the sides. These are strengthened by cross-rails *d* and *e*, and are held together by a notched bar *f* which takes into notches in the rails *d*; the ends of the press are recessed to receive the top rail *e*. The hay &c. is compressed by the platen *h*, drawn downwards by the windlass *j*. To remove the bale, the bars *f* are removed and one pivoted side turned down into a horizontal position, thereby forming a platform on which to receive the bale. The side which is not used as a door may be fixed to the ends *g*. The press is easily taken to pieces.

1507. Baines, J. M., and **Washington, S.** Feb. 2.

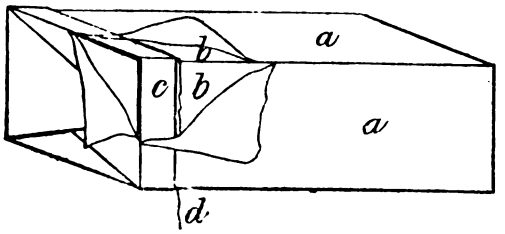

Paper and like bags.—The bag or packet, which may be cylindrical or oblong, is formed of an outer covering of paper or tinfoil *a*, to which is pasted a lining of cardboard *b*. At one end, between the covering and lining, is placed a narrow strip of cardboard *c*, to which a cardboard lid is attached, the outer covering being pasted to both. By cutting through the outer covering round the lower edge of the strip *c* (by a string *d* placed therein or otherwise) a convenient lid will be formed, of which the strip *c* forms the flange.

1950. Dufton, W. H. Feb. 10.

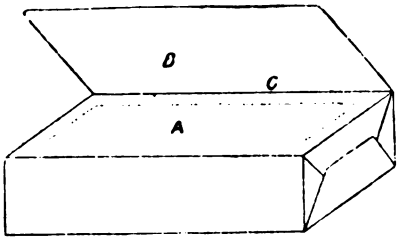

Wrappers for packing tobacco, cigars, tea, &c. A sheet of tinfoil or other material is perforated, at a part which will become a side of the packet, to form a lid or flap A. Another sheet B of similar material is joined at C so as to overlap the flap A in an opposite direction. The sheet is then moulded into the form shown in the Figure. To open the case, the upper lid is raised and a knife run round the perforations to enable the lid A to be opened. The lid A may be cut in the first instance instead of being perforated. The case is held closed by an india-rubber ring.

2102. Trayes, J., and **Anderson, J.** Feb. 13.

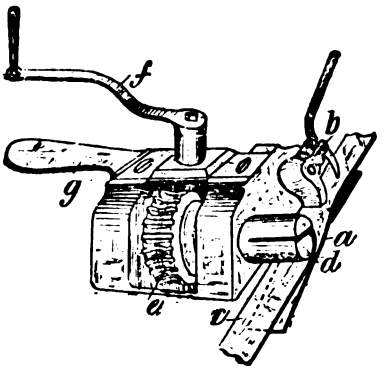

Baling-cramps.—The apparatus is for straining hoop iron round bales, boxes, and other packages. One end *a* of the hoop is fixed to the cramp by the clip *b*, and the other end *c* is passed through the slot in the spindle *d* on the worm-wheel *e*; on rotating the spindle by means of the handle *f* and the worm and worm-wheel, the hoop is tightened and held until secured. The handle *g* is for steadying the cramp during operation.

Digitized by Google

2635. Cheswright, C. E. H. Feb. 23.

Wrapping-materials.—Relates to a modification of "Bett's metal" which has a thicker coating of tin on one side than on the other. The metal is made by rolling together a plate of lead between two plates of tin which have the desired ratio of thickness. Wrappers are made from this by plungers and dies, the side which is exposed to wear or corrosion having always the thickest coating of tin.

2745. Goode, F. W. Feb. 25. *Drawings to Specification.*

Bale-tie fasteners.—Relates to means for connecting metallic and other bands. One end of the band has a rectangular hole punched in it, while the other end has a similarly-shaped but slightly-smaller hole with projecting flanges at two of its sides. The fastening is made by clinching these flanges after passing them through the hole in the other end of the band.

2849. Pelling, T. L. Feb. 27.

Wrapping or covering materials.—In packing goods in hermetically-sealed tins &c., a layer of parchment or other suitably-prepared material is placed between the tin &c. and the food stuffs, which may be meats, fish, fruits, or vegetables. The material may be placed in the top or bottom of the tin, or round the latter.

3345. Thomas, H., [*trading as* S. Thomas & Sons.] March 9.

Papering needles; wrappers.—On a T-shaped paper strip, as shown in Fig. 1, or on a single strip or strips of other shape, the needles are attached, in the ordinary way, in rows. In the form shown, the making up is effected by folding the side flaps *a* and *b* over the central part *d*, and then the flap *c* over all. The package thus made up is gummed at the back to an outer wrapper, the side and bottom flaps of which are turned over as when forming the inner package; then the upper tongue *i* of the wrapper is passed through the slit *k* in the bottom flap *g*, Fig. 2, thereby securing the whole.

FIG. 1

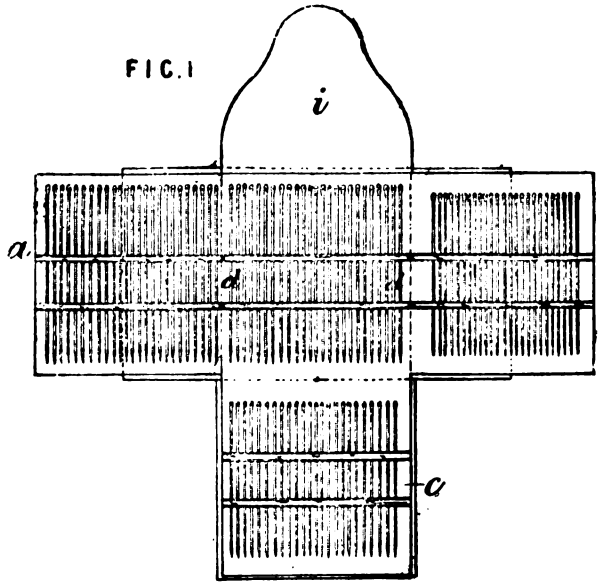

FIG. 2.

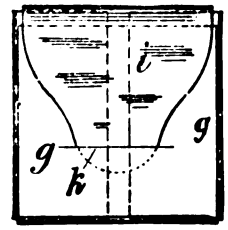

3572. Thompson, W. P., [*Pond, J. A.*]. March 13. *Drawings to Specification.*

Packing-materials.—Relates to the coating or "enamelling" of wood, paper, cloth, papier mâché, and other fibrous or porous materials. The principal object is to provide a cheap form of impervious packing-material, for edible substances &c., which will not impart any flavour to the substance packed; the coating will also serve, however, as a preservative, and as a water, grease, and acid-proof covering and to give an improved appearance to the surface. The coating consists of shellac, to which may be added 2 to 6 per cent. of beeswax, stearic acid, or other fatty acid; it is applied to the paper &c. by passing the latter between pressure rollers, the lower of which is supplied with the coating-substance and heated to 230°–300° F. by internal gas jets &c. The coated material may be polished by being passed through another pair of heated rollers, or by applying rapidly-revolving heated metal discs to the coated surface.

Digitized by Google

4051. Murray, D. A. B. March 23.

Sacks and like bags. — Relates to improvements in the mouths of bags to facilitate the filling and fastening of the same. The mouth A^1 is formed funnel-shaped by cutting from an ordinary bag the ears *a*, *a* along the line a^3, and then sewing the portions together. A seam along the line *b* at the base of the ears is also sewn. When the bag is filled it is fastened by simply folding down the funnel-shaped mouth between the grain &c. and one side of the bag, the ears serving as handles.

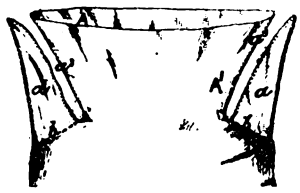

4546. Bellhouse, E. L. April 1.

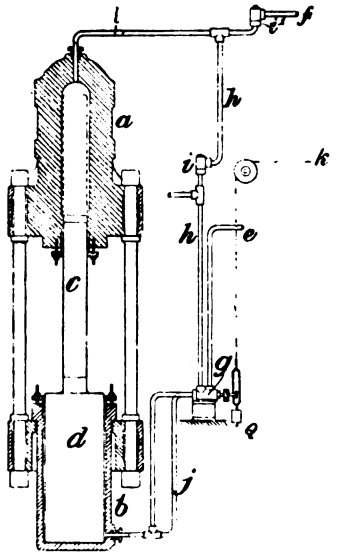

Baling-presses.—Relates to an auxiliary arrangement of differential rams by which an increased final pressure is given to the press, these rams being worked by the same pumps &c. by which the initial pressure is given. In the Figure is shown this arrangement. *c*, *d* are the two rams of different section, both being in one piece and working in the cylinders *a* and *b* respectively, which are firmly connected together as shown. The pipe *e* leading from the pumps &c. communicates with the cylinder *b* through the pipe *j* and the valve *g*, which is actuated by the cord *k* passing over a pulley. This valve shuts off the water from the cylinder *b* while the initial pressure is being given, the water in that case passing along the pipe *h* through the back-pressure valves *i*, i^1, and the pipe *f* to the press. When the pressure has reached the maximum which the pump will bear, the valve *g* is actuated to open communication with the cylinder *b*. The water is then forced to the press by the ram *c* through the pipes *e* and *f* with an increased pressure depending on the ratio of the section of *c* to that of *d*. Two modifications are described, one being double-acting, and both are self-acting.

4719. Richter, C. F. April 5.

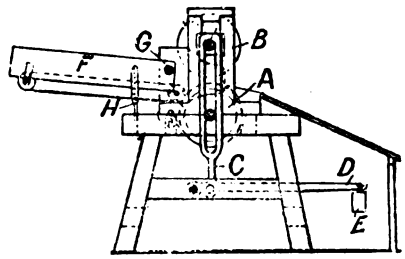

Packing-materials.—Relates to a method of and apparatus for softening straw for use as a packing-material. The straw is softened by being caused to pass between the two rollers A and B. The lower roller A is mounted in fixed bearings and may be turned either by hand or by power. The upper roller B is mounted in bearings at the top of the slotted bar C. The bar C is connected as shown with the weighted lever D; the straw which passes between the rollers is thus always under the pressure due to the weight E. The upper roller is turned by the friction of the straw passing between the rollers. F is the feed arrangement, which carries the straw direct from a thrashing-machine. It is hinged at G, and can be supported at any angle by shifting the pins in the holes of the upright H.

5040. Sherring, E. April 12.

Wrapping-materials. — Consists of a sheet of cardboard &c., rendered waterproof and antiseptic if desired, and having formed on both sides depressions and projections *a*, *b*. The depressions may be filled with pulp, and between them there may be vent holes *c*.

5323. Spence, H. April 16.

Bags, waterproof. The bags are formed from two pieces of cloth woven together at intervals longitudinally and transversely along the lines B, C. The fabric thus formed is then waterproofed on both sides. By cutting along the lines E, D, and F the bags will be formed, or, if a closed bag

Digitized by Google

is required, along the lines D and E only, in which case a small hole for the insertion of articles can be afterwards made.

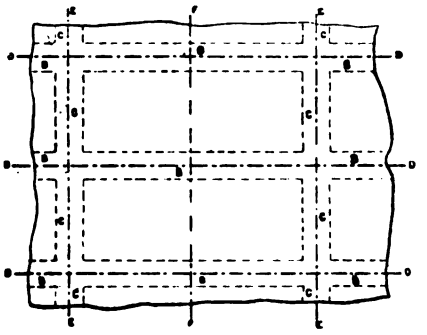

5712. Dickie, W., and **Inglis, W.** April 27. *Drawings to Specification.*

Paper and like bags.—To exclude moisture, a lining of waxed tissue or parchment paper, or an equivalent, is employed. The lining is cut to the same size as the outer strong paper, and is folded and gummed up the centre before folding the latter. Both thicknesses of paper are folded together when forming the bottom.

5774. Warburton, J. S. April 28.

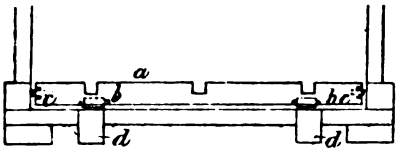

Baling-presses for hay, straw, and other material. A false bottom *a* is provided having rollers *b*, *c* underneath and on the sides so as to be conveniently run on and off for loading and unloading. When off it rests on projecting pieces *d*, *d*.

6809. Russell, C. H. May 20.

Packeting or parcelling tea, cigars, &c. for automatic-delivery machines. To better preserve the contents and ensure the free motion of the package in the machine, the goods are packed in hard tubes or cases of cardboard, tin, &c., the ends of which may be suitably closed by adhesive labels or by other means. These tubes or cases are further utilized by having advertisements printed thereon. The application to cigars, cigarettes, tea, sugar, and tobacco is mentioned.

6993. Stout, J. R. May 25.

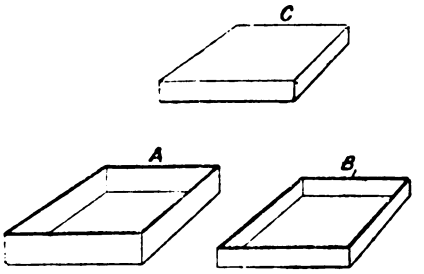

Packeting and filling confectionery &c.—The object of this invention is to pack confectionery and other tender articles so that the upper portion will be exactly flush with the upper edge of the box. This is effected by using in the first instance a paper or other box such as that of which the parts are shown in the Figure, where A is the body, and B and C two rectangular caps to serve as bottom and top respectively. To pack the confectionery &c., the cover C is first placed on the body and both turned upside down. On the cover as bottom the confectionery &c. is now packed, and when the body A is full, the bottom B, glued on the inside of the flange, is put on. The box is then completed, and also the packing. The caps, which are made from a blank, have that portion of the side flange passing over the end bevelled. A top and bottom not lapping over the body may be, however, used.

7613. Packer, E. G. W. June 7.

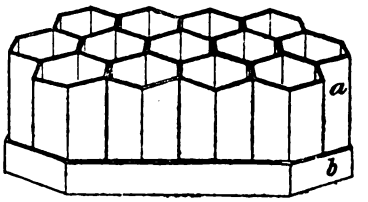

Frames for packing eggs &c.—The eggs &c. are separately packed into hexagonal cells *a* of cardboard &c., a packing-substance being used in addition if desired. A number of these cells, glued or otherwise attached together, are placed in a base *b* of the same material, and preferably flanged as shown. These may be placed in tiers, the upper one being also covered with a flanged piece or cap.

8709. Paget, A. July 2. *Drawings to Specification.*

Frames for packing incandescent lamp mantles.—For transport each mantle is suspended in a tube or bottle from a wire passing through the cork; a number of these bottles are placed in a weighted circular frame, which is supported by gimbals after the manner of a ship's compass.

Digitized by Google

9179. Newton, H. E., [*Germain, F. E. de*]. July 14.

FIG. 2.

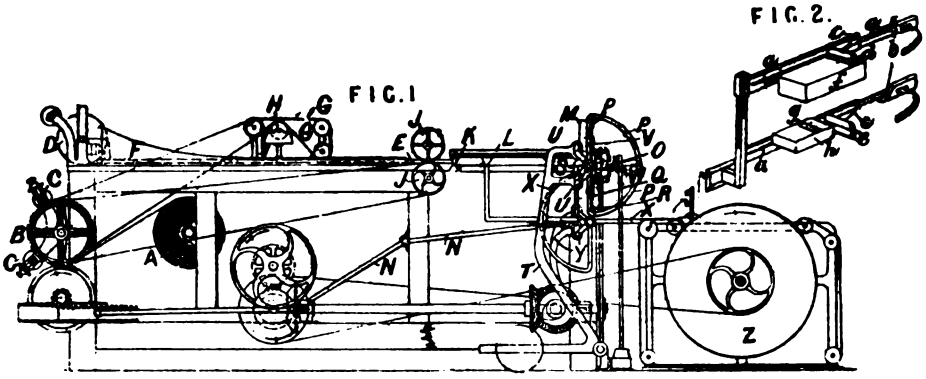

Paper and like bags, making. The web from the drum A passes round a roller B, with contact-rollers C, and under a roller D to a former E along helicoidal plates F, which guide one edge of the paper after the other, down upon the former E. A line of paste is deposited along the first edge by a felt band G, which receives paste from a roller H running in a trough carrying brushes I which remove extraneous substances from the band. The tube is intermittently drawn forwards, and the pasted edge pressed by rollers J, which stop after a certain length of tube has been delivered beyond a guillotine knife K. The knife K is carried by two graduated slides L, which allow it to be adjusted for bags of different sizes. The knife carrier is reciprocated vertically along a frame M by a cam lever N. In forming the bag bottom the mouth of the tube passes on to a pair of grippers O carried by curved arms P, and is held against the grippers by a pair of bars Q carried by a frame R centered at S. The grippers and bars are then partly rotated to open the mouth of the bag, by weighted cam levers T, the ends U of which engage the back lever ends of the arms P and frames R. A triangular plate V sliding horizontally in front of the frame M, and acting from one side upon the tube, when the latter is being opened, causes the bag bottom to take a square form and presses down the folds. The folding-apparatus, Fig. 2, which advances from the opposite side to the plate V as the latter retires, is provided with arms *a* having helicoidal surfaces or folders *b*, *c*, the former of which pass over the bag bottom when advancing, while the folders *c* pass under the upper and lower corners of the square bottom and deflect them through a right-angle, so that they project through slits in the arms *a*, and between rollers *d*, *e*. As the folders advance the lower roller *d*, working in a paste box *f*, applies paste to the underside of the top flap, while the roller *g* of the paste box *h* deposits paste upon the underside of a plate W, Fig. 1. As the apparatus returns the upper roll *e* transfers the paste from the plate W on to the upper side of the bottom flap, and the folders *b* fold the projecting ends down upon the bag bottom. The finished bag is held by a pair of arms X which, when oscillated by cam levers Y, carry it to a drying-cylinder. The parts are made adjustable for bags of different sizes. A modified form of machine is described.

9646. Elias, L. July 26.

Paper and like bags.—Relates to glazed material for cornets, bags, &c. for packing tea, coffee, cocoa powder, pudding meal, flour, maize meal, soup meal, almond powder, vermin powder, metal colours, snuff, &c. The material consists of metal foil placed behind transparent cambric or waxed paper, and sometimes backed by common paper.

9968. Lake, H. H., [*Thompson, R. H.*, and *Norris, H. D.*]. Aug. 3.

Wrappers for bottles &c. Cardboard &c. is corrugated longitudinally, and creased at intervals transversely along the lines *a*, *a*. This packing-material, previously made up if desired into the shape of the bottle &c. and covered with smooth paper, is placed over the article so that the creases will be vertical, the ends being secured by gumming &c. In the wrapper as completed an even number of creases appear for convenience in folding flat.

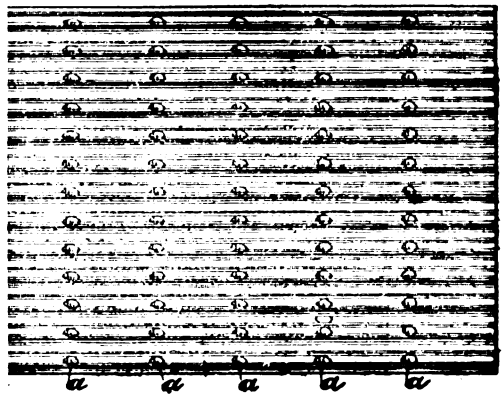

Digitized by Google

10,126. Edwards, S. Aug. 7. *Amended.*

Packing-materials.—Paper boards or the like are made with projections and indentations, as shown, by passing over a roller or between rollers after leaving the felt of the paper-making machine.

10,228. Pearman, D. Aug. 10.

Packeting and filling granular &c. substances.—A tube formed round a hollow cone of sheet lead &c. is closed at one end by a cap, and is then, with the cone, held in a hollow block while the coffee and groceries are being packed. The cone is then withdrawn, and the open end of the tube closed by another cap. The jointings are secured by labels or solder.

10,337. Brewer, E. G., [*Tinchant Frères*]. Aug. 12.

Wrappers for cigars, cigarettes, tobacco, and the like. A thin sheet of cedar or other wood is wrapped round a packet of cigars &c., and held in position by an elastic or other band.

10,521. Lesieur, L. F. Aug. 17.

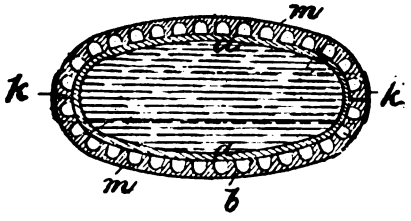

Wrapping-materials for bottles and other glass vessels. Consists of layers of cork or other elastic material *b* grooved longitudinally and transversely, the projecting pieces being further perforated, or of small pieces of the material, attached to a covering *m* of suitable fabric. The joints of the layers are secured by metallic shields *k*. The covering is shown surrounding a bottle *a* which it serves to protect in transit.

10,660. Pool, J. C. Aug. 20.

Frames for packing eggs.—Trays with wooden sides and cardboard tops, having corresponding rows of perforations d^1, are used in pairs to receive the eggs as shown. The upper tray is secured to the lower by dowels *f* &c. The eggs, being thus firmly held between the tops of the pair, can be conveniently examined by holding up the trays

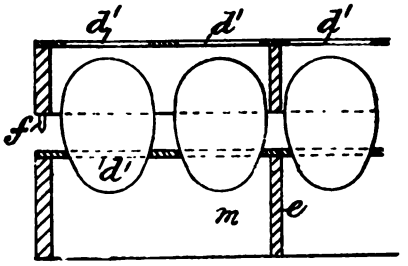

between the eye and the light. A number of these pairs may be piled on one another and placed in a case for transport, the top one being covered. The trays are strengthened by partitions *e*.

10,858. Donisthorpe, A. R. Aug. 25.

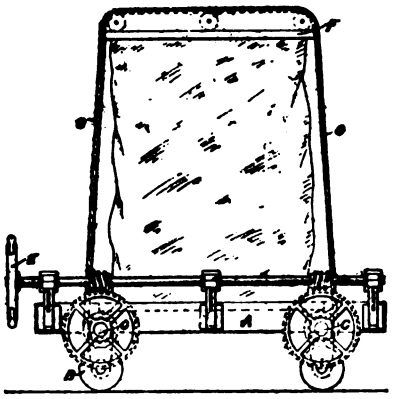

Baling-presses.—Under the base-plate A are two shafts C on which the compressing-rope &c. G passing over rollers on the plates F is wound. The shafts are rotated from the hand-wheel &c. E through worm gearing as shown. The press when used for baling may have wheels or rollers B for being moved about, and the platen F may be counterweighted.

11,080. Barrow, E. Aug. 31.

Bale-tie fasteners.—Corrugations or loops *e*, *g* are formed by special dies &c. on the ends of the metallic band, the sides of the loops being horizontal, as shown, or vertical. A plate or buckle *a*, flanged or otherwise, with one or more slots *b* according to the number of loops, is passed over

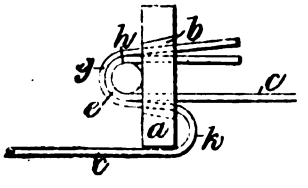

Digitized by Google

the loops, which are first fitted into one another, and secured by a pin *h*. When the bale is allowed to expand the plate is forced round in a line with the band *c*. Modifications are described in which the lower loop *k* also passes through a slot in the plate, which then rests partly under the band.

11,161. Rawson, F. L., and **Rawson, W. S.** Sept. 1.

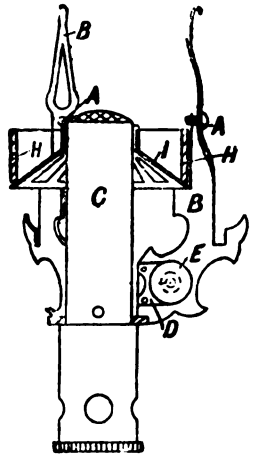

Fragile articles, treating to prevent damage during transit.—To prevent breakage of incandescent gas lamp mantles during transport, they are dipped into a solution of ozokerit contained in a glass cylinder resting in a metal cylinder containing oil which can be raised to a high temperature without vapourization. The mantles are slowly withdrawn, and the excess of paraffin is removed by wiping with a warm piece of glass.

11,284. Watson, J. Sept. 4.

Baling-presses.—Relates to compound or double presses for pressing cotton, jute, &c. in which the followers of two press boxes are so worked, by means of toggle-levers or thrust-rods, that the follower of one press is caused to descend while that of the other press is caused to ascend. The Figure shows a front elevation, partly in section, of one form. The two press boxes A, B are supported by a base-piece C and have ordinary main doors and end casing doors. The columns D support the press-head E, and the beam F supports and guides the crosshead G. There is a toggle-lever I, I for each box, the upper end of each lever being pivoted to the head E and the lower end to the corresponding follower; while the middle joint K of each lever is connected by a link L to one and the same crosshead G, which is provided with a nut within which the screw shaft works. The shaft turns in a bearing at P, and is fitted with a wheel or other mechanism for turning it. On turning the shaft the nut travels along it and pulls one link and pushes the other, forcing the corresponding follower home in the one case, and lifting the other follower out of its box. In the compound press having thrust-rods, the latter are pivoted at

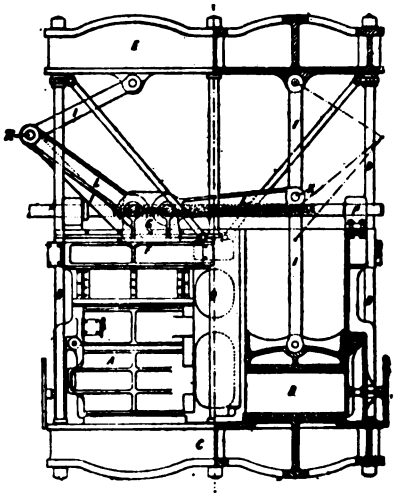

the lower ends to the followers and at the upper ends to the ends of vibrating bars, the lower ends of which are hinged to the base-piece. The vibrating bars carry crossheads at their upper ends, and each crosshead has a nut working on a right and left handed screw shaft. Provision is made for allowing the shaft and nuts to move up and down in consequence of the movement of the vibrating bars. In another modification, the screw shaft turns in fixed bearings carried by brackets fixed to the boxes, and the crossheads are connected to the ends of the vibrating bars by means of links. For pressing light material a press box is used which is of slightly greater diameter in the lower than the upper part.

11,287. Paget, A. Sept. 4.

Fragile articles, treating to prevent damage during transit.—Relates to means for temporarily strengthening the mantles of incandescent gas lamps to prevent breakage during transport. The mantles are strengthened by being dipped into a resinous, glutinous, or farinaceous solution, which can be afterwards burned off. A suitable resinous solution may be prepared by dissolving 2 ozs. of shellac in 3 ozs. of spirits of wine; a solution of starch or glue in water may, however, be used. The mantles may be immersed in a melted substance such as paraffin wax, and removed while hot, or they may be immersed in melted paraffin wax, beeswax, or tallow, the substance being allowed to cool and solidify with the mantles in it.

Digitized by Google

11,475. Brookes, A. G., [*Stearns, C. O.*]. Sept. 9.

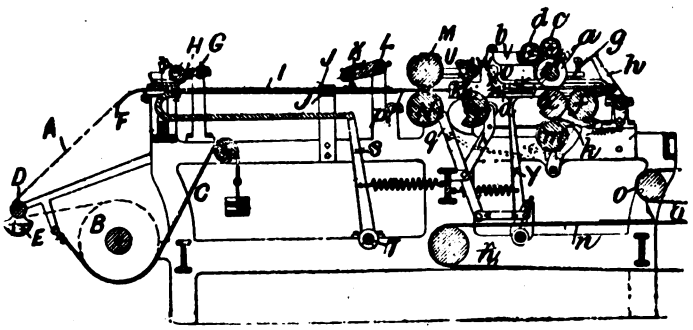

Paper and like bags, making. The web A is drawn by feed-rollers M, N from a roll B, kept tight by a weighted strap C round a roller D, where it is pasted along one edge by a wheel dipping in the box E, and held against the web by a spring over a tail-piece F, then beneath printing-mechanism G, with revolving type H, and along a former I with side wings and guides J for bringing the edges together. A lip is cut in the top ply by a pivoted cutter K rocked by the shaft L. The feed-rolls forward a certain length of tube over a plate to a slotted finger. A forked bar, reciprocated by a lever S from the shaft T, passes along with the tube to cause the tube to be deflected above and below the finger, and then withdraws to the position shown in the Figure while the blank is cut off by rotating cutters U, V. A folding-bar shown in two positions W, *w*, is moved along curved guides by its connection with a lever Y rocked by a pattern to form the diamond fold, which is then pasted by the roll *a* fed with paste from the box *b*, by the rolls *c*, *d*. The blank passes between the rolls *a*, *e* and above the rolls *e*, *f*, when the folding-blade *g*, carried by a rocking arm *h*, folds the end along a certain line by passing the partially-formed bag between the rolls *e*, *f*. The bottom is then folded upon the body of the bag by another blade *k*, which passes the bag between the rolls *e*, *m*. A travelling strap *n* carries the bags beneath a strap *o*, which, travelling faster than the former, lays the bottom of the bag flat. The folding-blades are connected by rods to cam-actuated levers *p*, *q*. The rollers at the end of the framework are adjustably mounted in a separate frame which can be moved for bags of different lengths. Alteration in width is provided for by altering the wings on the former.

12,054. Ripley, R. Sept. 22.

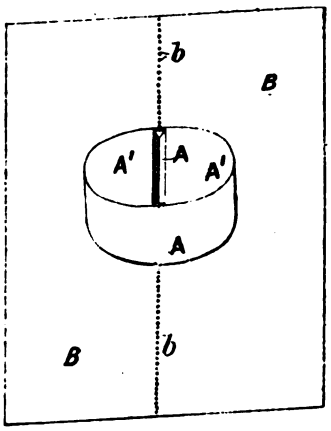

Parcelling blacklead, blue, &c.—In making parcels of blacklead, blue, &c., the block A^1 is nicked at A, or entirely severed into parts convenient for use. The wrapper B is perforated along the line or lines *b*, and when the block is wrapped these perforations come over the dividing line or lines, so that the parts can be easily torn off.

12,547. Day, J. M., Green, W. R., and **Walker, H. C.** Oct. 2.

Packeting and filling granular &c. substances.—The tea or other material is placed in a funnel, the end of which is surrounded by the wrapper, and by a block or casing which is then passed along a guide H under the plunger *c* until arrested by a

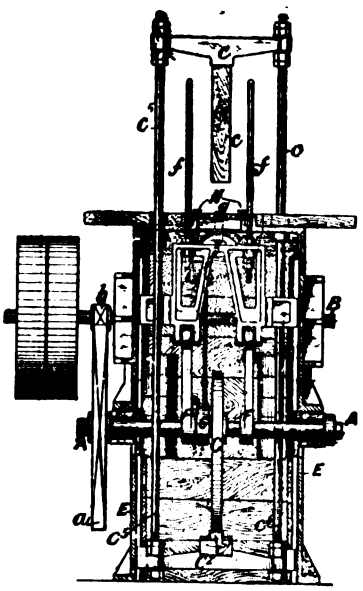

spring stop *g*. The plunger &c. may be actuated by levers, but are preferably actuated by cams on the shaft A, which is in connection with the

Digitized by Google

driving-shaft B by toothed gearing *a*, *b*. The plunger, which is carried as shown on the counter-weighted frame consisting of crossheads c^2, c^4 and rods c^5, is actuated by the cam C which constantly abuts against a roller c^1 on the crosshead c^3. The funnel, when the plunger presses on the material, is lifted by adjustable supporting-rods *f*, *f* actuated by cams F, F. As the plunger rises, after the material is compressed, flanges on the guide H prevent the casing from rising also. The packed case is next removed, the cam G withdrawing the stop *g*. The empty funnel now descends below the plunger, and is removed either by hand or automatically by secondary supports. Automatic feeding-devices may be used in which the stop *g* is dispensed with ; these consist of sliding blocks and catches, with spring levers worked from the cam shaft.

12,558. Capel, H. C. Oct. 2.

Baling-presses.—In the Figure is shown a press, for baling hay &c., adapted to be worked by a horse walking continuously round, but it may also be worked by a horse walking on an incline, or by steam power. To the upper end of the vertical shaft F supported on suitable bearings is attached one end of the pole K, to the other end of which the horse is yoked. On the lower end of the vertical shaft is a wheel G round the edge of which are radial notches, in which engages a pawl *h* pivoted to an arm H carried loosely on the shaft above the wheel G. The outer end of the arm H engages with a pin on the crank H^1 carried on a bearing H^2, and connected with the ram D through the connecting-rod I. As the shaft F is rotated the crank H^1 and thus the ram D are actuated through the pawl *h* which engages in a notch on the wheel G. When the crank passes its forward "dead centre" the elasticity of the material causes it to revolve more rapidly than the shaft F, the pawl sliding over several notches. By this device two or more strokes may be given for each single revolution of the shaft F. When steam power is used special gearing is employed. The frame on which the gearing is carried is preferably cast in one piece, and so mounted on the wheels as to give play in case of jolting when being carried about. The material is fed through a hopper at the side, and the baling-chamber C, which is open at both sides, is adjustable vertically by the screw C^2. The sides of the press may be inclined to facilitate tying &c. The ram is on rollers, and is formed of longitudinal strips with spring plates on top to prevent jamming. The follower plates which separate the bales have deep grooves for the ties, those on opposite sides being in positions not to interfere with one another.

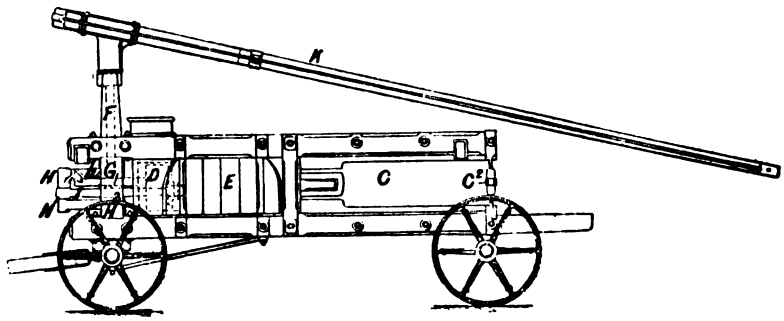

13,719. Beach, J. N., and **Smyth, G. H. M.** Oct. 26.

Wrappers for bottles and other articles. The wrapper consists of an inner piece *a* of cardboard &c., having attached to it in front strips *b* of corrugated cardboard, pieces of cork, or other elastic packing-substance. To the back of the piece *a* is attached a larger gummed piece of paper *c* for wrapping over all.

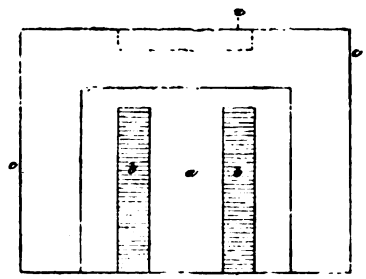

Digitized by Google

13,747. Wood, G. Oct. 27.

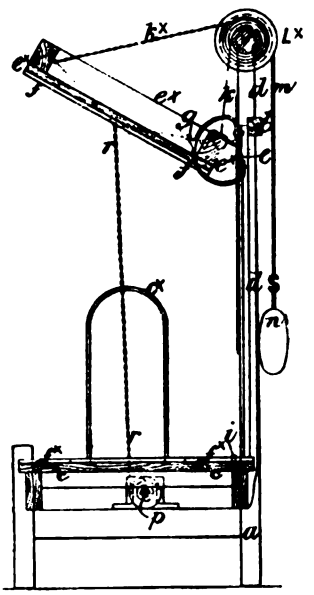

Baling - presses for trussing hay, straw, and clover. The platen, which consists of a beam *e* and hinged piece e^x, slides between two vertical grooved frames or standards *d*. It is counterweighted preferably through the cords &c. *k*, k^x attached thereto and to the roller L^x, and the cord *m* attached to a pulley on the roller and to the weight *n*. The chain k^x, which is attached to the front end of the hinged part e^x, is wound on a conical part of the roller, so that, in ascending, this part will lift in advance of the beam *e* as shown. At both sides of standards *d* are the standards *a* connected at the top by a cross-bar *b*, and at the base to the platform *c*. The platform has stops c^x for the truss and grooves f^x with spring retainers *i* for the band. The platen has also transverse grooves *f* for the same purpose, and a hook *g* to receive the loop. The platen is worked from the shaft *p* under the table, round drums on which the chains *r* in connection with the platen are wound. The shaft is actuated through a hand-wheel &c. by bevel &c. gearing, and a device is described by which supplementary pressure may be given. The pinion on the shaft is prevented from unwinding by a pawl, which can be thrown out of gear by a lever to relieve the pressure. The whole is on wheels.

13,969. Urquhart, A. Oct. 30.

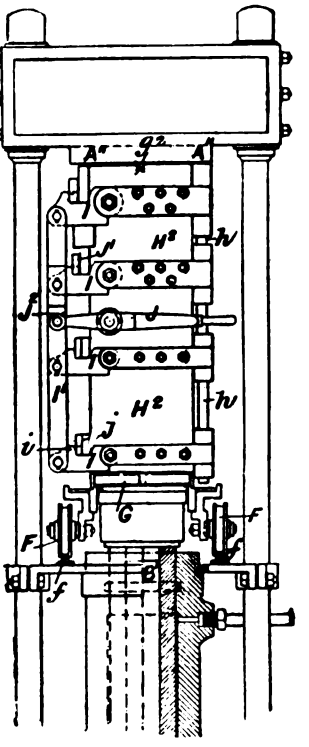

Baling-presses.—The box or press consists of iron or steel plates &c., hinged together through transverse stays thereon having single or double loops at the ends to receive corner pins or bars *h*. The end plate of the box is bolted to the back of a frame of the same shape as the box, but with the front end open. This frame is mounted through knee brackets on wheels F which run on rails *f* to enable the box to be brought over and from the ram B^1 of a hydraulic or other press having a pressing-plate A^{11} directly over the box as shown. The box is provided with a false bottom G grooved on its upper surface to receive the bale ties, and the plates forming the box have grooves g^3 at top for a similar purpose. The box, when full, is secured by catches I jointed to the front end H^3 of the box and to a connecting-bar I^1, the latter being actuated by a lever J also jointed to the end H^2 as shown. These catches take into projections J^1 of the stays on the adjoining side, and are prevented from loosening by a wedge driven under one of them. When the bale is pressed the box is withdrawn for lashing &c.

14,307. Scott, E. Nov. 6.

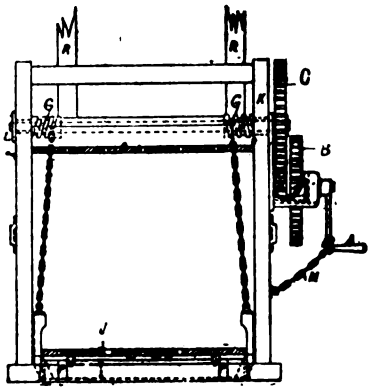

Baling-presses for hay. The platen J, which can be drawn forward over the bearers on which it rests to receive the hay, is lifted by working the handle A which actuates, through the toothed gearing as shown, the drum G on which the chain in connection with the platen is wound. At top is a fixed table O against which the truss is pressed. The pinion on the driving-axle can be slid into gear with either the wheel B or C, and thus a quick return motion can be obtained. The hook and chain serve as a brake &c. The whole can be turned over and automatically attached to a pair of wheels and axle for being carried about.

Digitized by Google

14,614. Allport, D. Nov. 11.

Wrapping-materials.—Paper or pulp is strengthened with wire, incorporated with it in the form of gauze or otherwise, and may be afterwards waterproofed or toughened and corrugated to form a strong material applicable, among other uses, as a covering-material for packing.

15,426. Turner, W., and **Lewis, G.** Nov. 26.

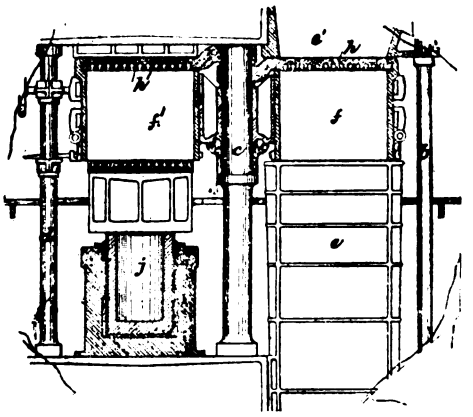

Baling-presses.—The pressure is effected in two operations. The press in which the preliminary pressure is given consists of a fixed box *e* into which the cotton is passed through the open top e^1. Over the fixed box is a movable box *f* which, with the box f^1, is swung on the column *c*, or they may be otherwise mounted so as to be conveniently passed from the preliminary to the finishing press and back. Each of the movable boxes has independently movable covers *h*, h^1. When the bale is loosely pressed into the box at the top, it is there secured, and is with the box swung over the finishing-ram *j*; as more than one movable box is employed both operations can go on simultaneously.

15,543. Gossage, F. H. Nov. 29.

Parcelling soap.—Tablets or bars of soap are wrapped in paper, calico, &c., sometimes damped, and made to adhere by pressure.

15,644. Mayos, T. T. Nov. 30.

Baling-presses for straw and the like. Relates to improvements in the machine described in Specification No. 7267, A.D. 1885. The hand-levers formerly employed are replaced by a double set of levers E, F, pivoted at e^1, f^1, and connected by links H, I to the foot-lever G, as shown. The spring K is provided to keep the levers raised while the receiver is being charged. The string clips are replaced by combs M, N, in which a number of strings are placed. The sides B, C are bent over at their edges, leaving sufficient space for removing the strings but preventing pieces of straw from getting inside the receivers. The

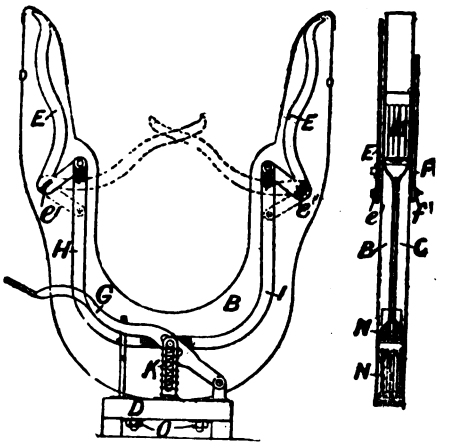

plates are secured by clips, and are easily removable to afford access to the combs M, N for filling them with strings. The receivers are secured to the base D by means of bolts O. Instead of the levers being arranged as above one set may work upwardly and the other set downwardly so as to compress the straw &c. between them.

15,890. Leeming, J., and **Leeming, J.** Dec. 4.

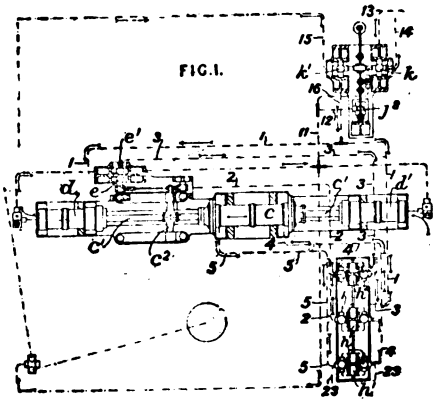

Baling-presses, supplying water to. Relates to water-pressure engine and pumps with a regulating-device to stop the action of the pumps when the pressure exceeds a certain amount in the hydraulic press. The water motor is shown at *c*, and *d* and d^1 are the pumps. The water discharged from the pumps enters the regulating-apparatus by the pipe 13, and leaves it either by the pipe 14 for the accumulator or by the pipe 11 for the

Digitized by Google

press, according as the valve k is opened or shut by the rise and fall of the loaded lever, the movement of which is effected by the action of the water on a plunger at j^3 through the branch pipe 12. When the pressure in the pipe 11 leading to the presses falls below that in the pumps and accumulator, the pressure from the accumulator in the pipe 15 passes through the valve k^1 to the pipe 16, and thence by the pipe 1 to the valves e and e^1. The valves e and e^1 are alternately opened and shut by the action of levers and tappets from the crosshead c^3 on the main piston-rod c^1. The valves e and e^1 admit water by the pipes 2 and 3 to actuate, by means of rams at h, inlet valves controlling the supply to the opposite ends of the working cylinder c. While water is being supplied to, say, the right-hand end of the cylinder c by the pipe 4, the other end is exhausting through the pipe 5 and one of the valves at h^1 which has been opened by a ram supplied by a branch from the pipe 4, the discharge being conducted to the cistern by the pipe 23. The pair of valves at h^2, actuated by rams supplied by the pipes 2 and 3, control the exhaust from the rams of the main cylinder inlet valves at h. It will thus be seen that, when one valve e is opened, a series of movements takes place in the valves h, h^1, and h^2, to admit feedwater from the accumulator to one end of the main cylinder c, and allow water to exhaust from the other end of the cylinder c; and when once the valves are placed in one position by the opening of one valve e they remain in that position even after the valve e is shut until the opening of the valve e^1 reverses the position of the valves; and as the piston in the main cylinder c travels towards one or the other end of the cylinder as long as there is a pressure of water from the accumulator, the valves h, h^1, h^2 are sure to be reversed at each end of the stroke, and the rams d and d^1 will continue to work, but will cease to work when the supply of water from the accumulator ceases. The back-pressure valves used for the inlet and discharge of the pumps, and in other parts of the apparatus, have helical wings to produce rotation, and thus obtain equal wear. A modification of the apparatus is described in which the pump chamber is inside the plunger or piston of the working cylinder. Another modification is similar to the last, but has the working cylinders and pumps vertical.

16,037. Bell, T. C. Dec. 8.

Packeting and filling granular &c. substances.—Relates to apparatus such as described in Specification No. 6211, A.D. 1884, for packing cocoa, tea, coffee, starch, rice, cleansing-compositions, &c. The apparatus is for dividing quantities of granular or powdered substances into several quantities of equal weight, and for filling packets therewith. Fig. 1 shows a part elevation and half vertical section of the apparatus, and Fig. 2 a plan of the lower part, on the right-hand side of which the apparatus is shown in the position for the removal of the packets. This latter consists of a box in which a number of transverse partitions b slide on rods e and in slots in the frame a. The partitions b are connected by chains j, by which they are extended; c indicates the transverse partitions. On the top p of the lower part of the apparatus is fitted the dividing-apparatus n, also divided into compartments s^1 of equal size by partitions s, and attached to the frame r by a spring catch y. The substance to be measured is poured into the compartments s^1 through the sieve t.

FIG. 1.

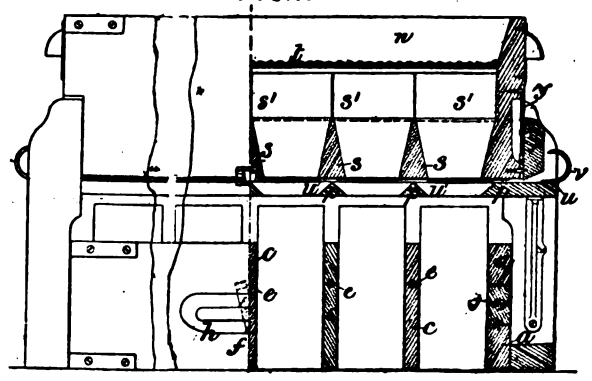

FIG. 2.

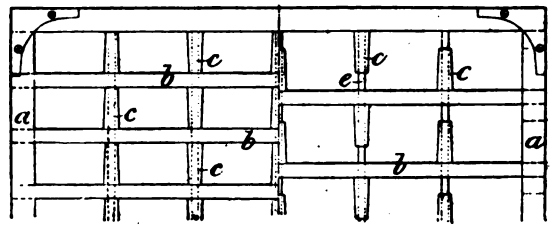

The sieve is then removed, and the top of the compartments levelled with a steel scraper; then the plate u is withdrawn sideways from beneath the compartments, and the substance allowed to fall into the packets. The dividing-apparatus is next released by the catch y and forced upwards by a spring beneath it to shake all the substances from the compartments, and then again fixed by the catch y, and a ramming-apparatus suspended overhead is drawn downwards and compresses the substance in the packets. After the packets have been folded and closed they are pressed simultaneously by a special block. The locking-handle f, Fig. 1, is then

Digitized by Google

turned so as to pass through the aperture *h* and the partitions *b* drawn apart for the removal of the packets. The ramming-apparatus consists of a frame carrying a number of rammers which slide through a guide separated from the frame by springs; the guide rests on the dividing-apparatus and the springs force the rammers upwards after they have been depressed. The dividing-apparatus may be used apart from the packing-apparatus.

16,577. Samuelson, Sir B., and **Samuelson, H.** Dec. 17.

Filling flour and meal into sacks, apparatus for. Consists in means for giving a differential motion to "possers" in order to pack the flour and meal by the impact of the sack with the floor of the mill. Pivoted in the hanger C on the shaft B is the forked lever A, over the pulleys at the ends of the fork of which passes the chain D by means of which the sack S is suspended, its mouth being fixed to the ring R which moves up and down the supply tube T. The opposite end of the lever A is connected by the link F to the crank-pin G, which is fixed to the wheel H mounted on the shaft J supported in the hangers K. By this arrangement the sack is caused to descend rapidly and ascend slowly.

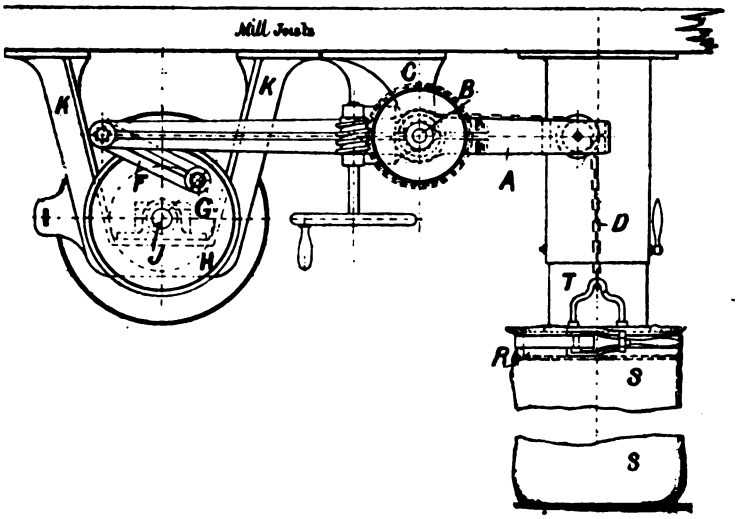

A.D. 1887.

434. Hodgson, J. Jan. 11.

Paper and like bags.—Seed or other sample bags or envelopes have their upper corners folded as shown, and secured by inserting the ends in an elliptical slit formed in the side. A piece of paper or cloth covering the slit is fastened inside the bag to prevent the contents from escaping.

(*For Drawing see next column.*)

434.

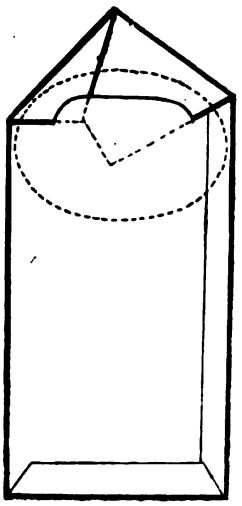

---

517. Lake, H. H., [*Wiggin, E. R.*]. Jan. 12.

Packing-materials.—Relates to corrugated paper or other fabric suitable for use as a packing-material for bottles &c. The paper &c. is made with broken corrugations as shown, the surface

Digitized by Google

between alternate projections and depressions being wrinkled, and no part being stretched or made thinner than the rest. It is specially adapted for

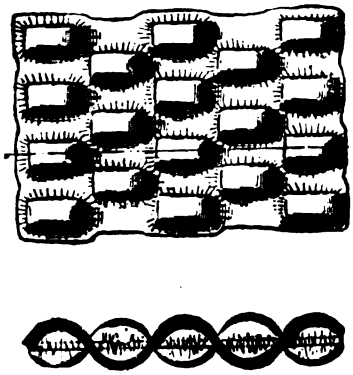

carpet linings and for packing bottles &c., but may also be used for making fancy articles, wall decorations, &c.

766. Bell, T. C. Jan. 18.

Paper and like bags, making. A blank, previously pasted along a side edge is placed on a table A and is folded into a tube round a removable block B provided with handle and stops, by tube-folders C, D hinged at E to the table. The bottom is partly folded by a swing block F, pivoted in the frame G, and then by bottom folders H hinged at I to the folders C, D.

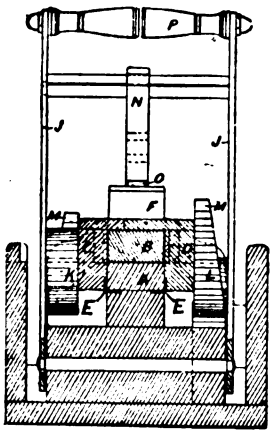

The last fold is formed by the operator raising the block B on its end. The folders are operated by oscillating levers J carrying a handle P, checks K, L, arms M, and a jointed bar N provided with an

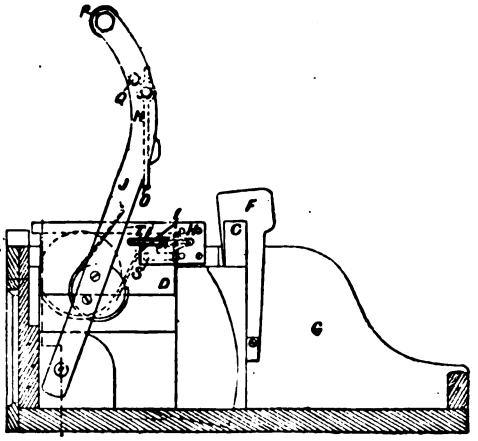

antifriction roller O. As the levers J are raised from a horizontal position, the checks K, L successively bear under and raise the tube-folders C, D; the bar N, which is held rigid by a rod Q, then swings the block F, which forms the downward flap, until its upper end bears upon the tube and against the end of the block B. The block F is weighted and swings into the position shown when released by the further movement of the levers. On pulling the latter down the arms M operate the bottom folders, by engaging plates R fixed to them and which are pushed outwards from recesses in the tube-folders by flat springs S. When released from the arms the bottom folders are opened by springs T. If the bag bottom is to be pasted the paste is contained in, and ejected by the swinging of, the block F. The levers J may be moved by hand or otherwise. In a separate apparatus for pasting one edge of bag &c. blanks, a paste trough having a slit in the bottom slides in a frame and rests upon a pile of blanks placed upon a platform supported by springs.

1839. Hale, E. Feb. 5.

Bale-tie fasteners.—The fourth side F of the wire buckle may be in one piece with the others, or it may be received in the looped ends E as shown. In fastening, the looped end G of the band may be passed over the bars B or F. The loop H is passed through the buckle and secured by a pin or bar J which, with the bar F, may form the two legs of a horse-shoe-shaped bar. The Provisional Specification describes pincers for forming the looped ends of the wire buckles. The jaws project at the sides, and one is rounded and fits loosely in a groove in the other. An adjustable guide-plate is also provided.

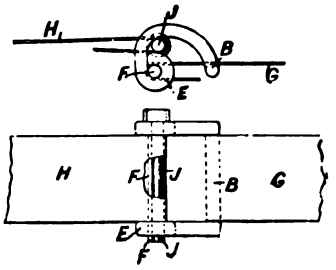

Digitized by Google

2699. Moreombe, E. S., Reeves, W. E., and Stevens, J. G. Feb. 22.

Paper and like bags, machines for making. Paper from the roll A is passed through rollers B and cut into blanks, Fig. 2, the edges *c*, slits *d*, and ends *e* of which are cut by blades C, D, and E on the upper rollers working in corresponding recesses in the lower rollers. The blank is pasted along the lines *b*, by a roller or discs working in a paste trough F provided with a scraper F^1, and is folded along a line *a*, which is the centre line, by a folding-blade J on the lower roller pressing the paper into a groove in the upper roller, where it is held by grippers H which carry the blank past a brush or guide K and deliver it doubled over, between endless tapes L. The side edges of the envelope or bag are gummed by rollers M, and are folded over by a tool N formed like a sewing-machine hammer. The bands convey the bag over drying-cylinders O, and deliver it at P. The seal flap may be gummed whilst passing through the rollers B or by hand.

FIG. 1.

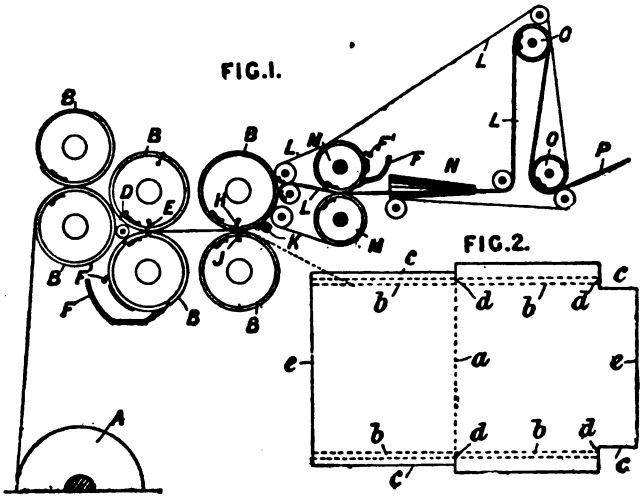

FIG. 2.

3176. Lonitz, H. March 1.

Parcelling coins &c.—A holder, Fig. 1, consisting of a half-cylinder A with two full ends a^1, a^2, is used to receive the coins or money *x*, as shown. These holders are intended to dispense with the counting of the coin, being of a size to receive exactly a certain number. The holder when filled is placed in a case B, Fig. 2, which is secured by a capsule or by other specified devices. An adjustable holding-device is provided to receive the holder during filling, or the latter may be furnished with a standing base by cutting off a segment from the end a^1.

FIG. 1.

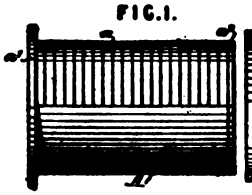

FIG. 2.

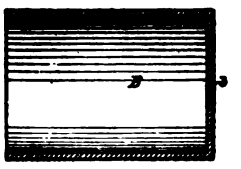

3206. Heyligenstaedt, L. March 2.

Filling minerals into casks. Relates to means for packing minerals. The cask rests on a table *d* loosely attached to one end of a plank *b*, which is fixed at its other end. The blank being springy is depressed by the weight of the cask, and is lifted by a lever *a* actuated at one end by a cam shaft and pivoted at the other end a^2. In this manner the cask is repeatedly let fall, and thus the packing is effected.

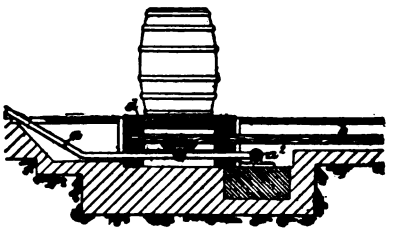

4364. Barrow, E. March 23.

Bale-tie fasteners.—One end b^2 of the tie is attached to the buckle A by being passed through the slots *f* and *g*. The tie is then drawn tight and the other end b^1 passed through the slot *e*, Fig. 1, in the other end of the buckle, which, when the bale is allowed to expand, assumes the position shown in Fig. 2, thus firmly securing the tie.

(*For Drawing see next page.*)

Digitized by Google

4364.

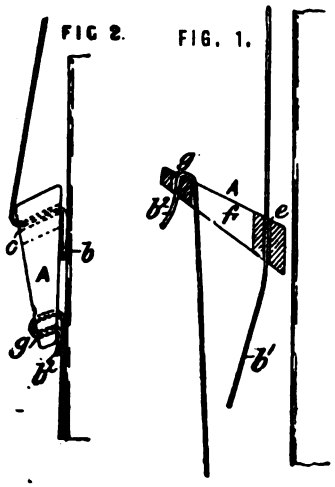

5428. Bradshaw, J. B. April 14.

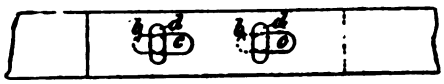

Bale ties and bale-tie fasteners.—The ends of the bale-hoop are provided with slots *b*, *c* to receive the fastening-studs *d*, the slots *b* being so small that the studs, which are passed through with difficulty, are retained therein securely.

5532. Edwards, E., [*Jeger, J.*]. April 15.

Packing-materials.—The mosses of the family *Bryinæ*, and especially the species *Hypnum* and *Bryina*, are dried and pulverized, and the powder is used as a packing-material.

5593. Coleby, T. April 18.

Baling-presses.—Relates to bundling-presses for yarn and other materials. The top bars *c* are brought down and locked to the front bars *b*, or unlocked and raised to remove the bundle, by moving a handle *y* in one direction or the opposite. Rods *g*, connected with a crosshead g^1, are raised to operate levers f^1 entering slots in the top bars and also slots in locking-bolts *e* sliding in the bars, by which means the bolts are first withdrawn, and then the bars turned upwards on their pivots *d*. In power presses the crosshead *g* is operated by connecting-rods from levers actuated by projections on one of the gear-wheels, the rebound of the follower, on release, effecting the unlocking and raising of the bars.

(*For Drawing see next column.*)

5593.

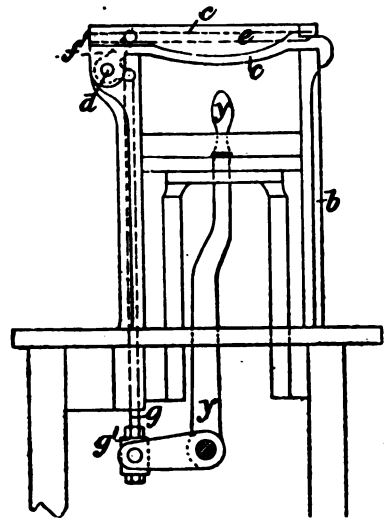

5805. Moir-Crane, P., and **Wilkinson, F.** April 21. *Drawings to Specification.*

Packing-materials.—Paper for packing bottles and other fragile articles is corrugated in the pulp state by special machinery.

5898. Leclercq, L. P. April 22.

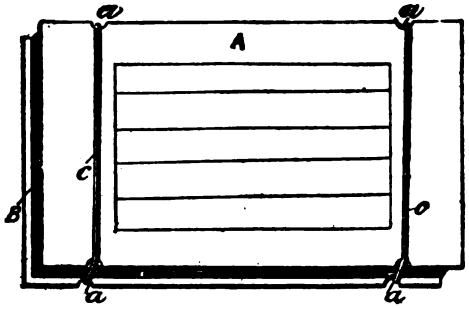

Parcelling samples &c.—Relates to packing or wrapping-up cloth samples or patterns for transit by post. The samples &c. are secured between two plates A, B, preferably of cardboard, held together by rubber bands *c*. The bands are looped through holes *b* in the plate B and are kept in place by notches *a* in both plates. Lines for the address are made on one of the plates.

Digitized by Google

6015. Cropper, S. April 25.

Paper and like bags.—To facilitate the closing, opening, and carrying of paper bags, cords *a* are passed through holes b^1 or through a hem b^3 at or near the mouth of the bag. The holes or hem may be strengthened by attaching separate strips of paper or other material. Two cords are preferable, though one cord only may be used.

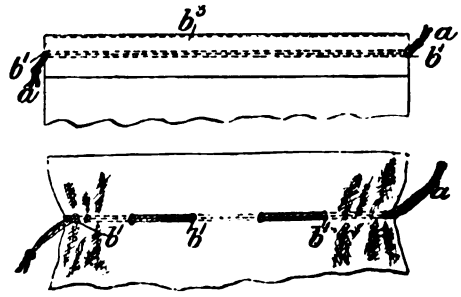

6067. Lorenz, W. A., and **Honiss, W. H.** April 26.

Paper and like bags, making. Continuous tucked paper tubing A is drawn from a former B by rods C and passed through pressing-rolls D on to a rocking carriage E operated by a connecting-rod F, jointed at G to a crank disc, and at H to the carriage. The tube is held upon the carriage by a parallel moving presser-plate I attached to brackets J and operated by arms and links from a cam K. During the backward stroke of the carriage and while the tube passes under the presser-plate, a pair of triangular tuck-blades L and a similar pair of rotary blades M are rocked by side cam levers N into the tucks. The rotary blades are then turned through 180° by the pinion O, rack P, and levers R and S, to fold the bag bottom into the shape of a box standing upon the carriage. As the carriage advances, an arm T passes in front of two serrated blades U, and severs the tube, as shown at 3, Fig. 3. The lower blade is fixed at the end of the former B, and is inside the tube. The tube is slit as at 4 by rotary blades V. A plate *a* and two shafts *b*, which are bent at right-angles at their lower ends to form sweeper-fingers, are connected to an oscillating arm *c*, and entering the "box" shape cause it to assume a "diamond" shape, Fig. 4. A lifter-plate *d* holds the end of the "diamond" against the plate *a*, and a plate *e* descends and flattens the diamond. The sweeper-fingers, which are rotated by a grooved cam *f*, sweep the blank into the bite of the flattening-rolls *g*. The presser-plate, lifter-plate, tuck-blades, and sweeper-fingers are then withdrawn from the partly-formed bag, which passes under guides *h* on to a rotating cylinder *k*. The front end 2 of the diamond is held on the cylinder by grippers *m*, and a line of paste 5 is applied by a segment *i*, which receives paste from a trough *j*. Creasers *n*, in conjunction with grooves in the cylinder, cause the rear flap 6 to rise, while side flaps *p* hold the blank just behind the flap 6. The grippers are now released, and the bag held at the mouth end 1

FIG. 1.

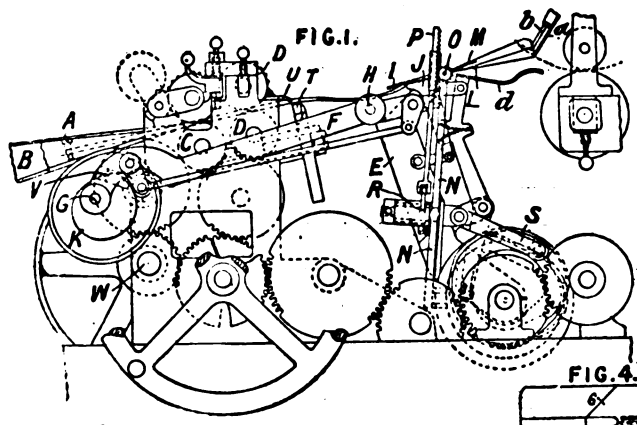

FIG. 4.

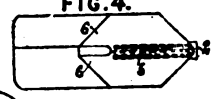

FIG. 3.

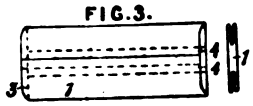

FIG. 2.

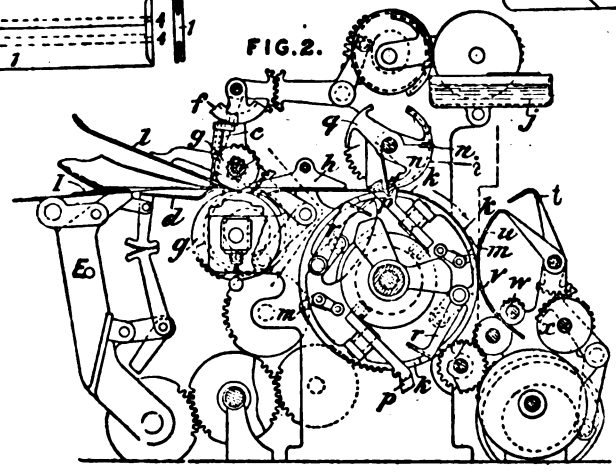

Digitized by Google

between a sector *q* and the cylinder, while two retracting-arms *r* are projected from the cylinder to retract the front 2 and so fold the rear flap by drawing it backwards and under the side clips *p*. An oscillating blade *t* completes the folding of the rear flap, while two other blades *u* fold the front flap and pass the finished bag above a curved plate *v* and through rolls *w* and *x*. Several modifications of the various parts are described in the Specification. The parts are operated by gearing, cams, and levers from the main shaft W.

6455. Leuty, J. M. May 3.

Baling-presses for hay trusses, bales, &c. Pressure is applied by means of a lever M, the short end of which is hooked in a link A of the chain H, and the fulcrum is suspended by a short chain R from another link B in the same chain; by depressing the handle of the lever M, the chain is slackened between the points A and B, and the slack is taken up by an S-hook N. By shifting the lever M, the chain H can be further tightened. In the case of ensilage stacks, the chains H are fastened round timbers O placed beneath the stack, and to short bars K to which metal bands *a*, *a*, *a* are fixed, and pass over to the stack to a similar arrangement on the opposite side.

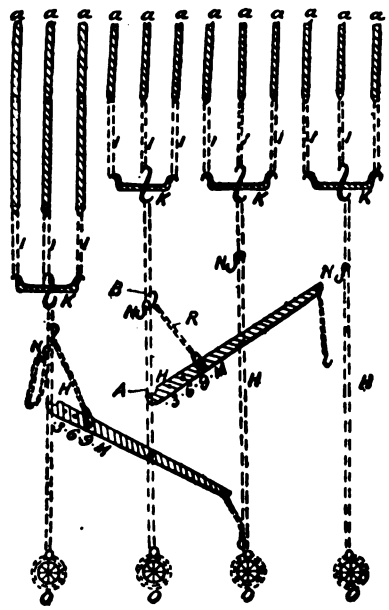

6930. Schlatter, O., Burtscher, H., and Schmid, A. May 11.

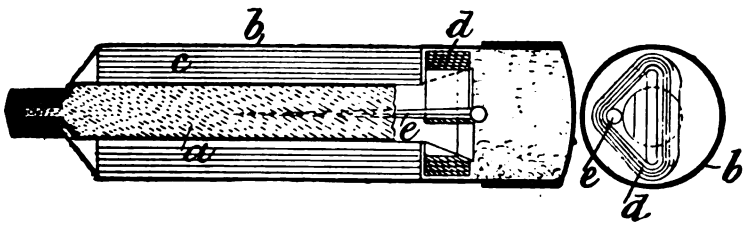

Parcelling surgical and medical appliances. — Relates to a portable apparatus for use in dressing and treating wounds, and consists of a small tube *b* of pure tin with an internal collapsable stoppered tube *a* for containing ointment, around which a bandage *c* is wound, together with a piece of antiseptic protective. An elastic band *d* may be wound on the tube *a*, and a pin *e* for securing the bandage may also be inserted. The end of the tube may be also filled with cotton wool, medicated or otherwise, and is closed by a cap of the same metal as the tube.

7073. Edge, W. May 14.

Parcelling washing-blue &c. — Relates to the invention described in Specification No. 12,666, A.D. 1884. The package consists of a bag of cloth or any suitable fibrous material, with a long neck. Blue or other colour used by bleachers, dyers, or for domestic purposes is placed in the bag, secured by tying the string F, and the neck is then

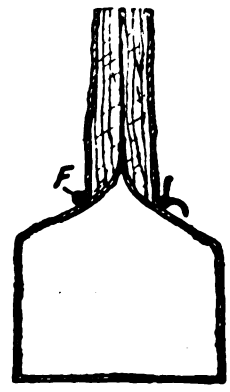

immersed in solutions of glue and potassium bichromate, or in melted paraffin and resin, or other substance insoluble in water, whereby

Digitized by Google

it is rendered stiff. The stiffened neck serves as a handle for manipulating the blue bag in the liquid to be used.

7281. Bower, H. C. May 19. *Drawings to Specification.*

Frames for packing eggs, fruit, soaps, &c.—The cells, which are collapsable, are made up of perforated, longitudinal, and transverse cardboard &c. pieces, slit and tongued so as to be readily put together.

7327. Bendix, L. May 19. *Drawings to Specification.*

Sacks and like bags.—For seaming bags &c., a cord, which may be waxed, is stitched to the back of one piece of the work, near the edge, using the first presser of a special sewing-machine. The two pieces of the work are then laid together with their right sides meeting, and are connected by stitching through between the cord and the edge, using the second presser of the machine. The work is then turned right side out, so that the edges and cord lie between the two parts, and these are further connected by a line of stitching through the cord, using the first presser.

7939. Baker, J. M. June 1.

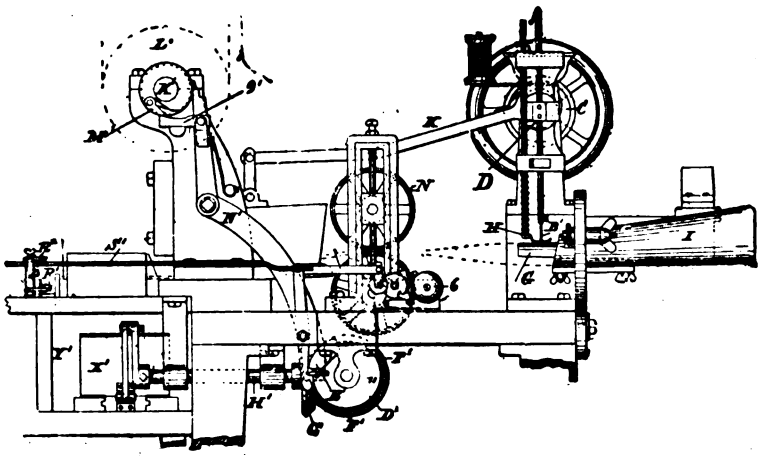

Wrappers for bottles and the like, making. The embossed paper &c. for the wrapper is fed in a strip through the former I, the overlapping edges of the tube which is formed being stitched by wire &c. by a special sewing-machine worked from the driving-pulley C. The stitch-locking mechanism of the sewing-machine works in the hollow arm G within the former, the end shown, which is perforated for the needle B^1 to pass through, serving as a rest for the presser-foot H. The sewn tube passes in a flattened state between special feed-rollers N, and under a finger, not shown, all worked automatically through the connecting-rod K and ratchet gear &c. from an eccentric on the driving-shaft D. When the end of the tube strikes against an adjustable transverse lever R^1, fulcrumed at R^2 at the end of the machine, the wheel D^1, which was hitherto held by a catch, is released through the rod S^1. On the other end of the shaft of the wheel D^1 is a driving-pulley, so that the shaft and wheel D^1 now rotate, and in so doing a projection E^1 on the latter actuates the spring lever N^1, and thus through the lever O^1 and pawl M^1 keys the loose driving-pulley L^1 to the shaft K^1, from which the cutters, by which the separate wrappers are cut off &c., are worked, being actuated by eccentrics on the said shaft. In addition to the transverse cutter for cutting off the wrapper, there are two cutters at right-angles thereto for slitting the edge of the tube to facilitate the folding of the same under the bottom of the bottle &c. Underneath the cutters are metallic strips which assist in shearing the material. In connection with the rod S^1 is also an alarum device, as shown, by which the bell 6 is rung when a certain number of wrappers have been cut off. The wrappers fall into a receptacle Y^1 running across the machine, where they are piled by the sliding head X^1 worked from the wheel F^1 through the bevel gear G^1 and shaft H^1 &c. The cutting and piling mechanism may be detached, and a modification of the arrangement shown is described.

9247. Steenberg, J. F. V. June 29.

Packing-materials.—Fish, meat, or other food, which may be wrapped up in porous paper or in a waterproof but not airtight covering, is packed in dry powdered materials such as peat dust, charcoal, rice husks, sawdust, or the like, and preferably in peat dust.

9817. Imray, O., [*Simmons, W. A.*]. July 12.

Wrapping or covering materials. — Embossed papers for packing fragile articles, such as bottles, and like purposes are made of a mixture of wood and straw pulp. Felt or other fabric may be cemented to the paper or between superposed layers of the same. The material is made up into casings to enclose the article to be packed.

Digitized by Google

10,294. Slaney, A. J., and **Nelson, R.** July 23.

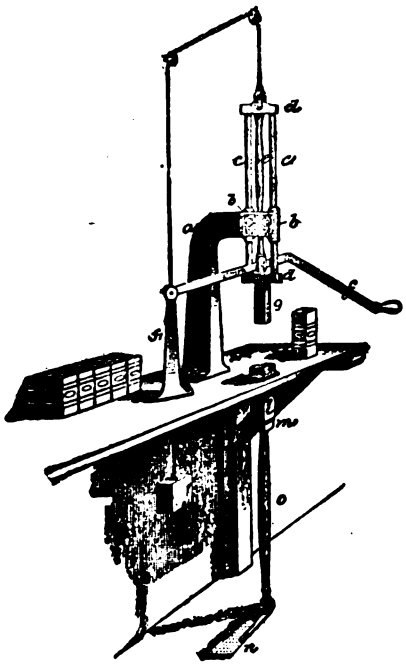

Packeting and filling granular &c. substances.—Relates to apparatus for compressing and packeting tea and other dry materials. The upper part of a standard *a* for attachment to a counter &c. is provided with guides *b* for the rods *c*, which are connected by cross-bars *d*. To the upper bar of the frame *c*, *d*, which is counterweighted as shown, is pivoted the rod *e*, with the lower end of which the hand-lever *f* pivoted to the standard f^1 engages. Thus, on lowering the hand-lever, while the bar *e* has a slight play, the frame with the presser *g* attached to the lower cross-bar moves quite vertically. The case *l* which receives the packets is provided with a bottom *m* adjustably held on the rod *o* actuated by the treadle *n*. By this arrangement the withdrawal of the packets is facilitated.

10,583. Mills, J. A., and **Christopher, W. B.** July 30.

FIG. 5.

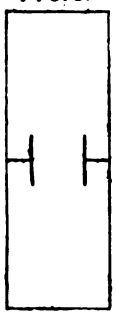

FIG. 7.

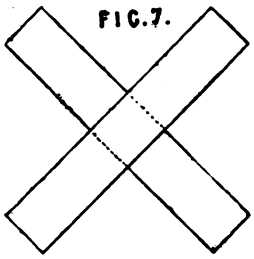

Sacks and like bags for coal &c. The sack or bag has a square or rectangular bottom which is formed by slitting the blank as shown in dark lines, Fig. 5, or by laying two blanks across one another, Fig. 7, or in other ways. The edges are seamed, and loops or holders are attached at the top and bottom.

10,631. Jarboe, W. S. Aug. 2.

Parcelling confectionery, soap, &c.—Relates to parcelling or wrapping packages or blocks of solid material, such as confectionery, soap, &c. The paper is fed from the holder F^1 between a pair of feed-rollers F^2, F^3, the former of which is automatically actuated from the main shaft (not shown) through a connecting-rod &c. and pawl which engages with a ratchet-wheel h^3 on the same spindle as the feed-roller. Rods G^2 in grooves between the rollers serve to guide the paper, and spring stops are used to arrest the momentum of the rollers at definite periods. When a certain length of paper has been fed through the box G into the holders I, I it is cut off by shears consisting of a fixed blade H^1 and a pivoted blade H^2 worked from an oscillating frame. The substance to be wrapped is fed from a hopper or shoot into an oscillating delivery trough I^1, from which it is ejected through an opening near the lower end

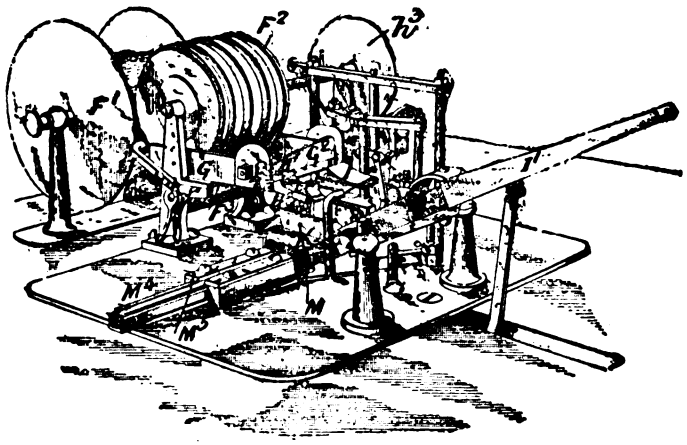

Digitized by Google

by a plunger actuated through segment-wheel &c. gearing. Near the said opening is a clamp or gripper by which the forward end of the paper is held until the article is deposited thereon. The left-hand fold is now made as the article and paper lie on the table by a hinged wing M worked through a rack. A horizontal plunger M^4 moving between guides M^5 now pushes the package under another folder by which the other top side fold is made. End folders actuated through differential frames are next set in motion, and these moving from a horizontal to a vertical position make the top end folds. The rear, side, end, or angle folds are effected by a pair of arms pivoted to the base-plate and swung round horizontally. The other angle and bottom folds are made by screw-and-flange &c. devices through which the package is next thrust by the pusher M^4. The various movements are effected by cams &c. on the main shaft which runs horizontally under the table on which the apparatus rests.

10,648. Haddan, H. J., [*Wood, N. B.*]. Aug. 2.

Baling-presses. — Relates to machinery for pressing, baling, and binding straw and the like. The material is fed down the hopper E, E^1 into the chamber A by endless bands I and rollers e^4, combined, if desired, with packing-levers working in the throat *a* and actuated by a cranked shaft. In the throat may also be placed cutting or chopping roller devices. In the chamber A traverses a platen by which the material is cut off from that in the hopper and compressed, being forced into a chamber X with hinged sides adjustable by hand-wheels Z. The bale in its passage is automatically bound by wires or cords, and the finished bale is pushed off by that next following. The binding wire or cord is fed from rolls o^1, o^2 below and above the chamber to a series of threading frames or segments P, there being two rolls supplying two strands to each frame. These are actuated by the movement of the traverser through two bars Q, having hooks q^6 which engage with cross-bars m^1 of the traverser on the backward travel of the latter, the said bars Q being pivoted at *q* to the pivoted segments or quadrants N, the teeth n^1 of which engage with the toothed pinions *o* on the shaft O on which the threading-frames are mounted. On the backward stroke of the traverser the threading-frames are thus raised, and the strands, the ends of which were in the first instance twisted or knotted in pairs together to receive the bale as it is pressed towards them, are now brought round the bale, and are twisted together by a knotting-device, which also severs the twisted portion in the middle, thus leaving the strands knotted in pairs for a fresh bale. Spring hooks T^1 abut against the edges of the bale, and the frames P against the back while being tied. On the forward movement of the traverser the threading-frames are lowered through the pivoted rods *u*, U, and the hooks q^6 lifted by a gravity incline q^3. The knotter, Figs. 8, 9, and 10, consists of a twister v^5 having teeth w^3 which gear with a pinion V^1 on the lower end of a vertical shaft in gear at its upper end with the horizontal shaft L by bevel gearing *v*. Under the twister is a guide-plate v^2 slotted to receive the strands which are hooked into the ribs v^6 of the twister by the nose v^9. The ribs are sharp-edged for severing the twisted strand. The size of the bales &c. is regulated by the bales themselves, which on their passage actuate the pinion S, and thus a pawl hook T by which the bar Q is locked, as shown, with the hook q^6 lifted above the cross-bar m^1, until released by pins on a ratchet disc which periodically trip the hook. The various parts are actuated from the main shaft d^3 by chain gearing, as shown, and also by toothed gearing between the shafts D, C, the latter of which is cranked for traversing the platen. The shaft L is provided with a clutch controlled by the bar Q.

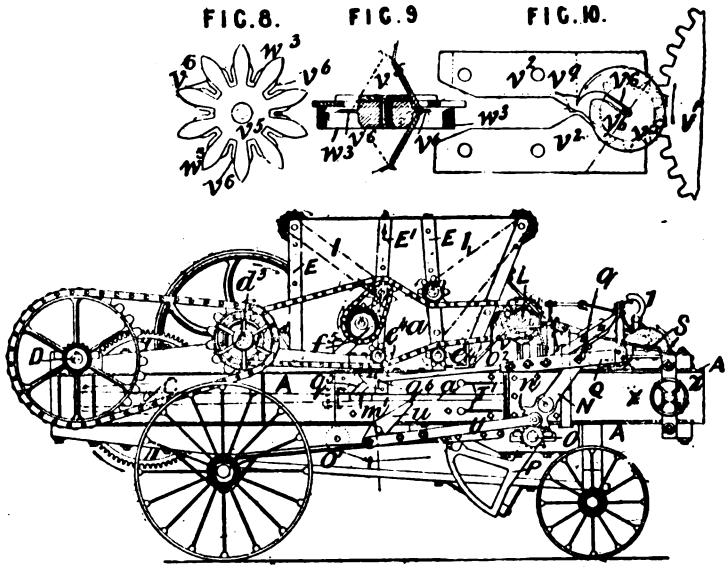

Digitized by Google

10,739. Wolf, B. Aug. 4.

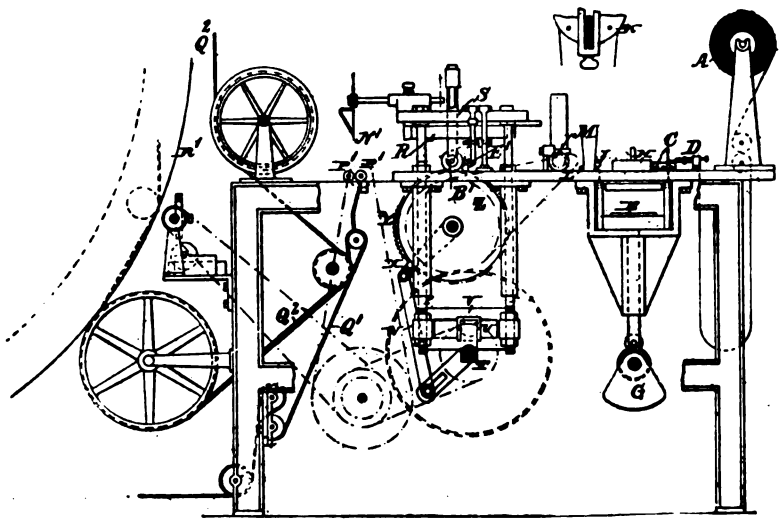

Paper and like bags, machines for making. Paper is intermittently drawn by feed-rollers Z, B^1 from the roll A under the rollers C, printing-bed H, and roller J, and then over an elevated drum K having adjustable bearings, and under a roller L, pasting-rollers M, and cutters R. The roller Z is operated from the shaft T by a link W carrying a pawl X engaging a ratchet-wheel Y. The cutter R which cuts out the bag &c. blanks, and also creaser blades, are carried by a head S reciprocated by a crank U working in a crosshead V. The sides of the bag &c. are folded by slides E^1 connected by links or tappet-levers provided with spring catches and adjustable stops adapted to engage projections on the head S. The upward movement of the latter causes the slides to advance and then retire. The bags &c. are folded transversely, and the gummed parts pressed together by a folding-blade N^1, carried by the head S, descending between rollers P^1, P^1. Endless aprons Q^1 and wires Q^2 deliver the bag &c. to a drum R^1 on which the seal flap is gummed and dried. One of the drums carrying the wires is supported in swing hangers with adjustable bearings. The screw-supported bearings of the drum K enable the paper to be adjusted longitudinally on the printing-block without interfering with the parts or operation of the machine.

10,788. Redfern, G. F., [*Frérot, C.*]. Aug. 5.

FIG. 1.

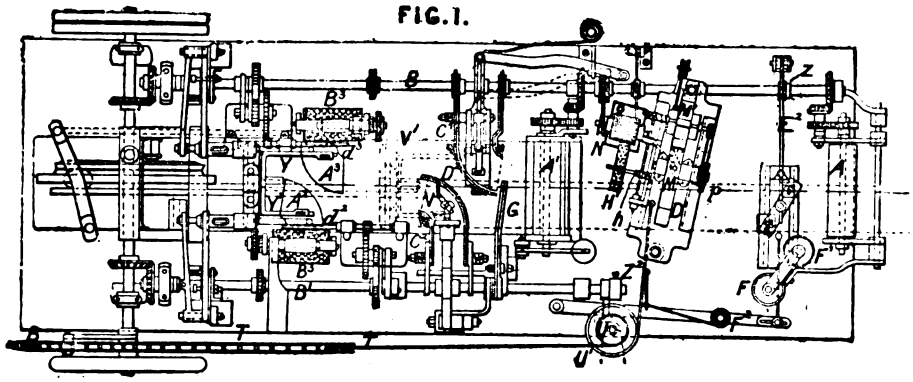

Paper and like bags.—Relates to a machine for making cones or "conical tubes" from a paper strip, and for impressing any desired marks on them. A paper strip is drawn intermittently from a roll by means of rollers A actuated by a shaft B, and passes over a carriage D with stamps for inking or embossing. The carriage is moved periodically underneath inking-rollers F, F^1, by a lever actuated by a cam Z^2 on the shaft B^1. When the carriage is in position a flexible arm E^2 is caused to descend instantaneously on the paper by a cam Z on the shaft B, thus impressing the necessary marks without the necessity for stopping the paper. A carriage D^1 reciprocates over a table G placed at a distance from the stamps equal to a length of

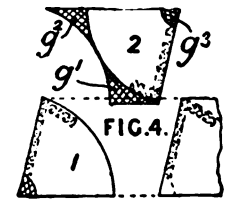

FIG. 4.

Digitized by Google

paper sufficient to form two tubes. The carriage D^1 carries an emery or other grinding-wheel M which roughens the paper as it is drawn across it. The wheel M is geared by a band to a fan M^1 which blows away the dust produced by the wheel M. The carriage D^1 is moved in one direction by a chain passing round an adjustable pulley U^1 which is attached to a pulley U actuated by a chain T, moved by a lever deriving motion from a cam on the main driving-shaft of the machine. The return motion of the carriage is effected by a weight. The table G has a brush which forms a yielding support for the paper while the wheel M is operating. The wheel M is driven by a cord passing over a pulley. The fan has a worm spindle which actuates by suitable gearing a second worm spindle having a brush wheel H which damps the paper. The wheel H is wetted by a corrugated drum dipping into a water tank N. The band is drawn from the roughening-device by a pair of rollers A^1 actuated by the shaft B, and passes beneath a cutter C which divides it down the middle of the roughened portion into parts, each sufficient for two tubes. A pair of cutters V at the same time cuts off from this portion a part shown at 1, Fig. 4. The remainder, shown at 2, Fig. 4, is then drawn aside by a carriage D^2 and cut by a second pair of cutters V^1, the shaded portions g^1, g^2, g^3, Fig. 4, being cut off. The cutters now open and allow tongs Y, Y^1 to advance and draw back the sections of paper, shown at A^2 and A^3, introducing an edge of each into grooves in the rotating mandrels d^2, d^3 by which they are rolled into tubes. During this operation gum is applied to the paper by means of a special pump which discharges a quantity proportioned to requirements. Pressure is at the same time applied to the paper by brushes B^2. The tubes are then forced off the mandrels by rings.

10,948. Reid, W. F. Aug. 10.

Packing-materials.—Fruit is packed into a heap consisting of alternate layers of fruit and of earth or mould, and the sides and top of the same are also covered with earth except when the heap is formed in a pit. If necessary a layer of paper or some porous material may be interposed between the fruit and the mould, or each fruit may be separately wrapped in similar material. When fruit, preserved in this manner, is to be conveyed to a distance it is packed in cases or boxes with alternate layers of mould and with or without a covering to preserve it from contact with the same.

11,579. Capel, H. C. Aug. 25.

Baling-presses for peat combined with elevators, breaking-apparatus, and weighing-machines. The peat is lifted from the pit &c. by a carrier *a* passing over a pulley a^1 on the shaft p^1, the movement of the carrier being controlled by a rod *t* connected with the weighing-beam *l*. When the beam tilts the rod arrests the bevel-wheel *r* mounted loosely on the shaft p^1, thus causing the bevel-wheel r^2 to actuate the bevel-wheel r^1, which is also loosely mounted, and with which is connected the shifter by which the band *h* is passed to and from the fast and loose pulleys *q*, q^1 on a countershaft *p*. The peat passes down the shoot *g* to the breaking-roller *d* (or this latter may be placed in the pit), from which it passes over the shifting-screen *i* to the receptacle or scale *k* of the weighing-apparatus. This, when the peat thereon reaches a certain weight, descends, the movement of the carrier being at the same time arrested as before described. The bottom of the weighing-receptacle *k* is closed by hinged doors *n*, *n* connected by links *o*, *o* actuated by the handle o^1. From the weighing-receptacle the peat falls into the press *m*, the platen of which is actuated in any manner. The press has two fixed sides and two movable sides, one of them being slotted to receive the ties. The cover *w* can be moved along the rails *x*, and the bale, which is attached to the cover by hooks, thus removed from the press.

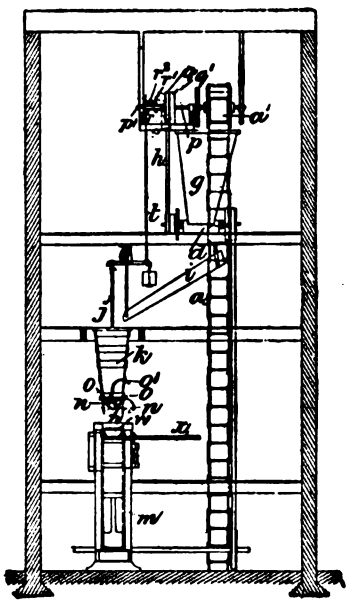

12,008. Storey, A. H. Sept. 5.

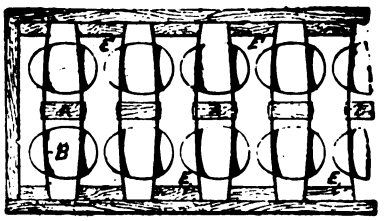

Frames for packing eggs &c.—Flexible plates B of

Digitized by Google

cardboard, sheet metal, or canvas, stretched on a wooden frame and perforated at C, are attached in pairs to blocks A, being entered into grooves in the box E and held thereby to retain the eggs &c. between them. In a modification, the blocks A extend across the frame, which is arranged to slide in an outer case.

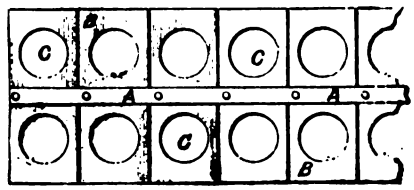

13,093. Duerden, J. Sept. 27.

Paper and like bags, making. Relates to a machine for making square-bottomed paper bags, of which Fig. 1 shows an elevation, Fig. 2 working parts in vertical section, and Fig. 3 a bag after the primary or diamond fold has been made. Paper A is drawn by rolls D from a roll A^1 and it is pasted along one edge by a roll A^1, carried by links B^2 which cause it to bear against the paper. It then passes over a former C, around which it is deflected to form a tube by stationary fingers B^5 and guide-plates B^6. A lip is cut in the upper side of the tube by a semicircular cutter C^5, and two connected and parallel slits are cut from below by another cutter. These cutters are pivoted to bent levers E and are acted upon by springs D^4, which tend to keep them vertical, but allow them, when cutting, to be carried along with the tube. The tube, which is fed on to a finger F by the rolls D, is supported and its forward end opened, by a longitudinal rod G^1 with forked end reciprocated in the former C by levers &c. G^2. In forming the diamond fold the upper side of the tube is held back by the finger F, while a folding-blade M, sliding in curved slots of brackets M^1, withdraws the tube from the finger, folds it against the body of the bag, and carries it to rolls D^2, D^3. The rod G^1 returns to the position shown in Fig. 2, after which the tube is cut into lengths by a serrated blade L^4 entering a slot L^5 in the roll L, while paste is applied to the central portion of the diamond by a special block fixed between the rolls D^2 on the main driving-shaft H. After passing through the rolls D^2, D^3, the bag is guided by a wire F^2, above rolls W, D^2, between which it is passed by a rocking blade U, thus folding the bag bottom along the line *b*. A second folding-blade U^1, by passing the bag between rolls X, D^2, folds the bottom of the bag along the line *c* upon the body of the bag. The elevated part of the finger F is made narrower than the lower horizontal part F^2, and the slits are formed by a cutter so that the inner edges *e* of the diamond fold shall lap over the part F^1 and be closer than usual, and thus make the diamond fold, and hence the bottom of the bag, assume a more square form than usual. Paste for the bag bottom is supplied to the block by a special roller T resting thereon and revolving at the end of a trough R pivoted at T^1 and provided with an adjustable slide S for regulating the quantity of paste. The machine is adapted for making bags of various widths by means of adjustable wings C^3 on the former C, and of various lengths by regulating the relative speed of the severing and drawing rollers by changing the wheel H. The speed of the severing-rolls may be increased or diminished immediately before and during the severance of the bag by a slotted disc K on the shaft L engaging a pin on a disc K carried by a shaft L^1, which can be raised or lowered to vary the motion.

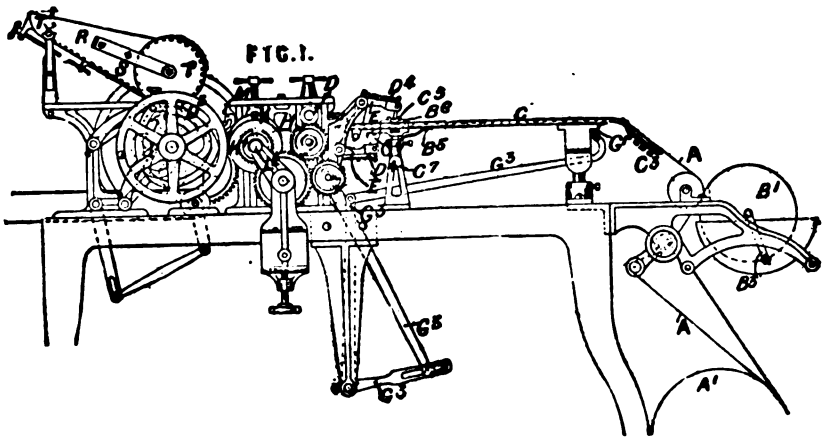

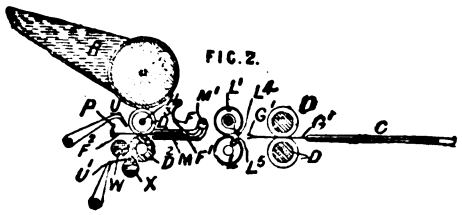

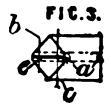

Digitized by Google

13,401. Marsh, J. Oct. 4.

Baling-presses.—A lever A is pivoted to brackets *b* on the bed D, and is connected at its upper cross part *c* to one end of a link by pins *e* or other means. The lower end of the link is similarly connected to the platen C, and the link is preferably adjustable in length by a nut *k* and screws *l*, *l*. One edge of the platen is connected to the bed by pins *m* in slots in the lugs *n*. The matter to be pressed is placed upon the bed D when the lever A is down, out of the vertical position, and the pressure is applied by pulling over the lever towards its vertical position. Lugs *o*, *p* are provided at the pivots of the lever A to prevent it from moving far beyond the vertical.

FIG. 1.

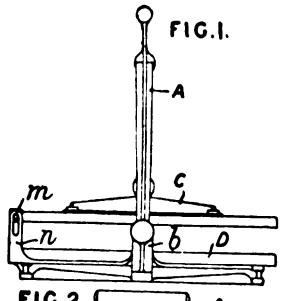

FIG. 2.

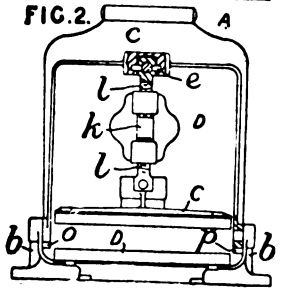

13,642. Scott, E. Oct. 8.

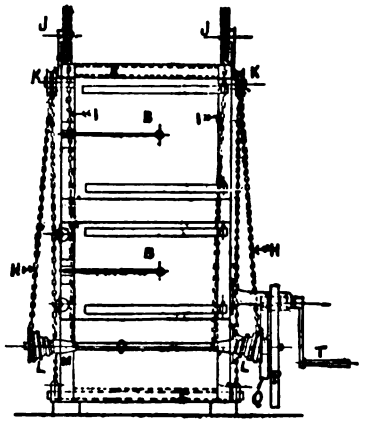

Baling-presses.—Relates to trussing-presses for straw &c. The top and bottom platens are actuated by the chains I, H wound on the scrolls M, L of the driving-shaft O, and passing over pulleys J, K as shown. The driving-shaft is worked from the winch handle T through spur gear, arranged for single and double purchase. The box is provided with front and back doors B for filling and lashing, and with an end slide for releasing the bale. On reversing the handle the weight of the bale depresses the lower platen and lifts the upper. For removal the press is fitted with wheels and shafts.

13,817. Collitt, J. S. Oct. 12.

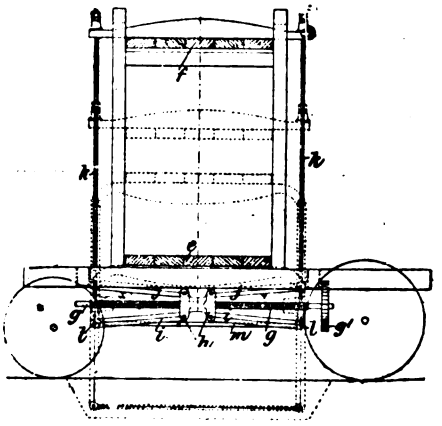

Baling-presses.—The platens *e*, *f* are actuated by four pairs of toggle-levers *i*, *j*, worked from two right and left handed screw shafts *g*, one of which only is seen. The outer ends of the lower toggle-bars *i* are attached to tension bars *k*, *k* in connection with the upper platen, and to guide-rods *m* and *l*. The outer ends of the upper toggle-bars *j* are attached to the framework of the lower platen. The inner ends of the toggle-bars are pinned to nuts *h*, *h* on the screw shafts. The latter are worked from the driving-shaft through the pinions g^1 on one end of each. When the bale is compressed, the toggle-bars &c. assume the position shown in dotted lines.

13,895. Harris, H. Oct. 13.

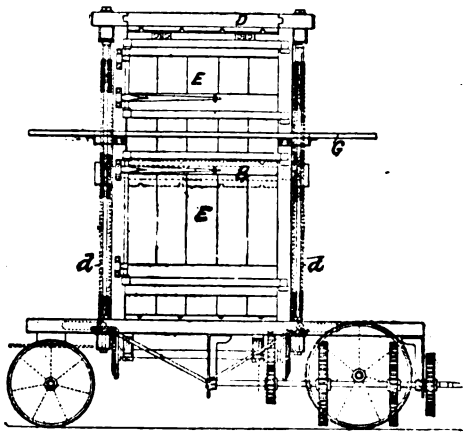

Baling-presses for trussing hay, straw, and other materials. The platen B is worked by the screw shafts *d*, actuated by suitable mechanism placed under the press. The press is provided with doors E at the top and bottom of each side, so that while the truss is being pressed in one half, the other half can be filled for compression on the return stroke of the platen, a truss being thus formed on each upward and downward stroke. The top D

Digitized by Google

slides for greater facility in filling. The upper part is provided with flaps G, on to which the truss in that part can be pushed. The press may also be horizontal.

13,965. Lennox, A. B., and **Wharton, J. H.** Oct. 14.

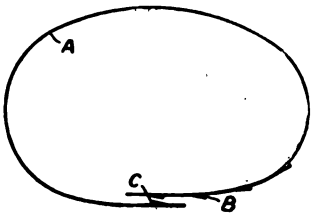

Binders or bundling-bands for papers or other parcels. A tongue C is formed in one end of the metallic band A, which, when passed through one of the slots B in the other end serves, as a fastening. The slots are made on the ridges of corrugations so that the tongue will not injure the material bound.

14,225. Gauchot, P., and **Grimaud & Chartier.** Oct. 19.

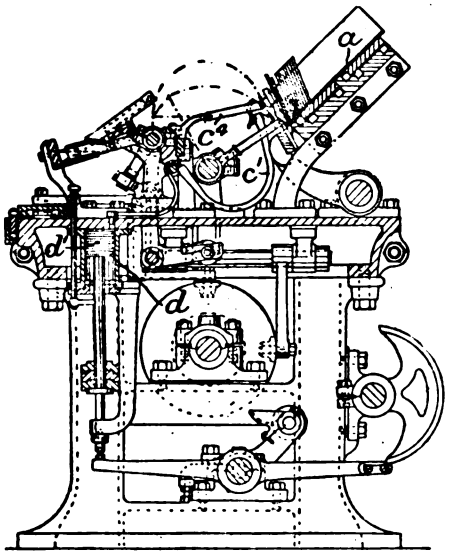

Parcelling cards.—Relates to apparatus constructed so as to take one card from each of a number of piles of similar cards and make them up into packs containing one of each sort, as is required, for example, in the case of playing cards. The contrivances are all worked from a main driving-shaft by suitable gearing. Each of the piles, which in the case of playing cards are 52 in number, is placed in a box having an inclined bottom *a*, one side adjustable to suit the width of the card, and the other movable to and fro. The box is provided with grippers to hold the cards, and appliances for giving the to-and-fro movement to the movable sides of all the boxes simultaneously. One card is withdrawn at a time by means of a flexible tube c^1 from which the air can be exhausted by a piston d^1 working in the cylinder *d*, and is then lifted over by the link c^4 on to a table, and passed on by a rake to receive the card from the adjoining pile, and so on, a separate piston, flexible tube, card receptacle, &c. being provided for each pattern of card. The final packs of cards thus formed are carried forwards on to a travelling band, which also receives sheets of paper in which the cards are wrapped up. Arrangements are made so that, in starting the apparatus, the pistons come into operation in succession. Should a sucker fail to act, or a box become empty of cards, the mechanism is contrived to stop the machine automatically, or the machine may be stopped by hand.

14,522. Holt, F., and **Bodley, H. E.** Oct. 25.

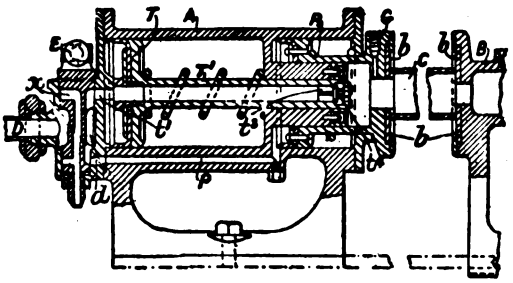

Baling-presses.—The invention described below in connection with a testing-press is stated to be applicable for baling-presses, the rod T^1 being then made solid. A longitudinal section of a press with a pair of concentric rams is shown. The tube C or other article, such as a hollow casting, bottle, &c. to be tested, is held between the movable head B and the outer ram R, each of which is faced with lead *b* to make a water-tight joint. The ram R moves in the outer end of the cylindrical casting A, in the inner end of which is another ram T with a hollow rod T^1 open at the outer end and fitted with a valve t^3. Water is admitted to the ram R through a passage P, and to the ram T by a port t^1, both controlled by a cock E having an axial passage *x* with side openings in the planes of t^1 and P. It also has a chamber D in communication with the water-supply pipe and with the cross-passages shown. To test a tube it is placed in bearings (not shown) between the heads A, B and then by turning the cock E water is admitted through the passage P to the ram R which holds the tube C in position. By further turning the cock, water is admitted through the port t^1 to the ram T and hollow rod T^1, and by the opening of the valve t^3 to the interior of the tube until the pressure in the main D is reached in the latter, whereupon the valve *t* is closed by the spring t^4. The end of the rod T^1 then acts as a solid plunger and exerts on the water in the ram R and tube C the pressure on the large end T. A gauge fitted

Digitized by Google

to the tube G is used to show when the necessary pressure is reached. After the test has been applied, by turning the cock the water is exhausted through the axial passage *x*. Springs are used to return the rams, or, in the case of heavy apparatus, hydraulic power may be used.

15,061. Borns, G. M. Nov. 4.

Wrappers, applying to newspapers and the like.—The gummed wrapper and journal are fed from the table N between the jaws L, L^1 of the gripper, which is then automatically rotated, a spring wiper R^1 meanwhile pressing the journal and wrapper thereto. When thus wrapped a block S^1 sliding on the jaw L^1 pushes off the journal, which, if desired, then passes along a band between flattening-rollers, and finally drops into a basket. The gumming-device consists of a table O over which oscillates a frame P pivoted at one end, and carrying at the other the gum trough Q within which moves the gumming-roller *q* actuated at each oscillation of the frame by ratchet gearing. The frame is actuated by cams on the countershaft I. The gripping-jaws are opened for the reception of the journal and wrapper by a cam on the inner face of the drum H mounted on the countershaft I. This cam abuts against an antifriction roller on the rod *l* within the spindle J of the gripper, and connected as shown with the jaw L^1 thereof. The jaws are again closed by the spring l^1. They are rotated through a pinion *i* on the spindle J which engages with teeth on half the inner circumferences of the drum. The latter is actuated through the pinion G attached thereto engaging with the pinion *a* on the driving-shaft B. The driving-pulley A and pinion *a* are both loose on the shaft, being put in gear therewith by a spindle passing through both, and attached to a sliding collar in connection with a sleeve D. The clutch is worked by a lever F^1, and continues to act until a tooth on the sleeve falls into the recess *h* in the drum. The block S^1 is worked by a spring sweep S actuated through the rod T by a cam on the drum H.

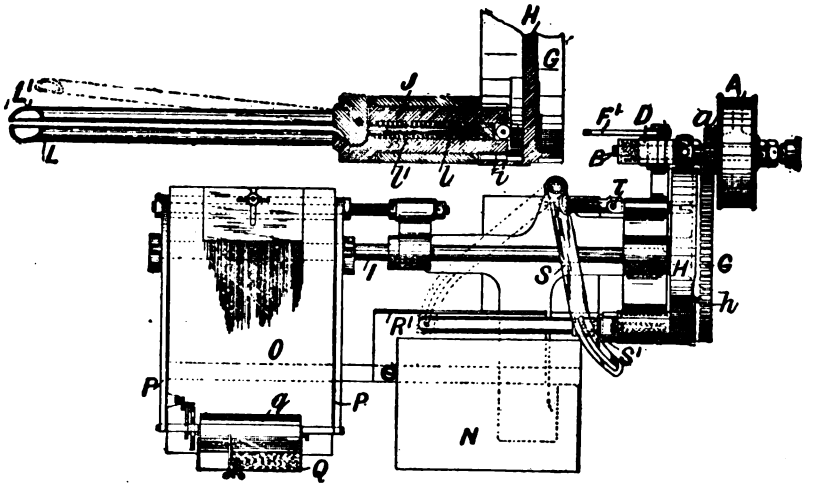

15,115. Burgess, W. J., and **Burgess, C. T.** Nov. 5.

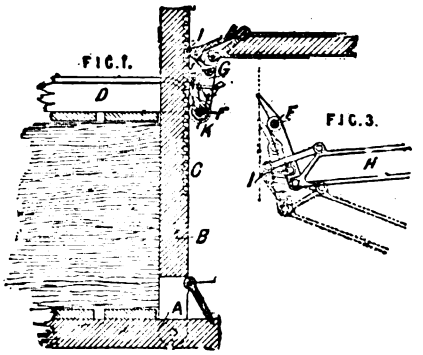

Baling-presses.—Relates to a portable lever press for pressing hay, cotton, wool, &c. Fig. 1 shows a vertical section of one end of the press. A is the bed of the press, and B an upright hinged to one end of the bed and provided with a rack C. The material to be pressed is placed upon the bed A, and the follower D is laid above it. The bent ends of the follower carry links G pivoted to the pin F. The long lever H is pivoted to the upper ends of the links G; a link connects the lever H to the pawl I, which is pivoted to the links G. The pawl K, turning loosely on the pin F, serves to prevent the return of the follower D after it has been pressed downwards. The spring L may be used to press the pawl K under the rack teeth. By this arrangement of levers, at each end of the press, two different powers may be obtained, viz.:—A lighter pressure when the lever H is moved so that the pin F is above the point of the pawl I, as shown in Fig. 3, and a heavier pressure when the levers are in the position shown in Fig. 1. The top plate or follower may be fixed and the bottom plate movable; or the press may be arranged so that both are movable.

Digitized by Google

15,669. Bishop, T. Nov. 15.

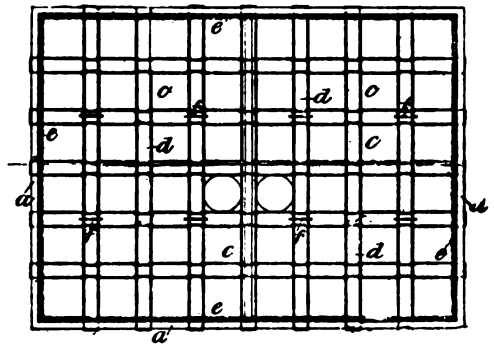

Frames for packing eggs.—Two or several pieces of wire netting, having large openings *c*, in which the eggs are held between each pair of pieces, and narrow openings *d* between the larger ones, are stretched across the frame *a*, lined with wool &c. *e*. The wires are held together by clips *f*. These frames, when filled with eggs, can be packed into boxes or baskets for transit.

16,781. Vaughan, G. E., [*Andrews, W.*, and *Beaven, A. W.*, (trading as *Andrews & Beaven*)]. Dec. 6.

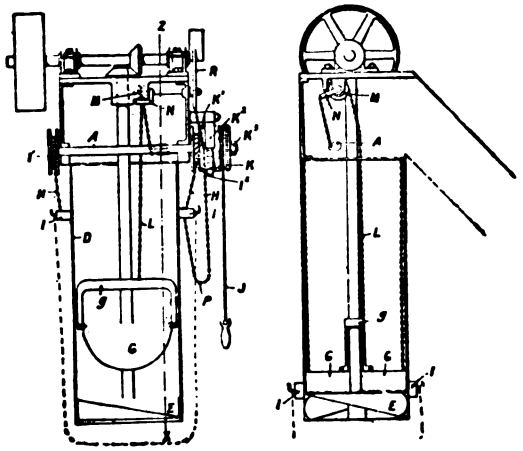

Filling chaff into bags. The bag to be filled with the chaff is secured to the ring or platform I encircling the cylinder D into which the chaff is thrown by an ordinary elevator. The chaff is forced into the bag by the rotary helical press E, and the flap valves G are automatically closed when the sack is full to stop the feed of the chaff until a fresh bag has been placed in position. The mechanism is as follows:—A spindle A carries pulleys I^1, I^2 upon which chains H supporting the platform I are wound. A chain L is secured to the spindle A, and after passing over the pulley M supports the bow *g* of the valve G. A catch N attached to the weighted lever R locks the chain L during a portion of the operation. A brake is placed on the spindle composed of a ratchet-wheel K mounted loosely on the spindle between two friction discs K^1, K^2, which turn with the spindle, and can be adjusted by the nut K^3. A rope J is wound upon a pulley on the spindle A in the reverse direction to that of the chains H. The operation is as follows:—A bag is attached by a ring of special construction to the platform I, and then the cord J is pulled, winding up the chains H, H, L, thus pulling up the bag over the cylinder D, and raising the valve to the position shown in Fig. 1. The chaff is then packed by the press E into the bag, which is forced downwards against the friction of the brake, the chain L being meanwhile prevented from running down by the catch N. When the bag is nearly full the chain P attached to the platform I and lever R pulls the latter down, releasing the catch N and allowing the chain L to run down and close the valve G. The rotation of the screw E continues without intermission during the whole operation of filling and changing the bags. Modifications are described, in which the valves G, which may be either in the form of flap valves or throttle valves, are actuated by an arrangement of rods and levers.

16,837. Vaughan, G. E., [*Andrews, W.*, and *Beaven, A. W.*, (trading as *Andrews & Beaven*)]. Dec. 7.

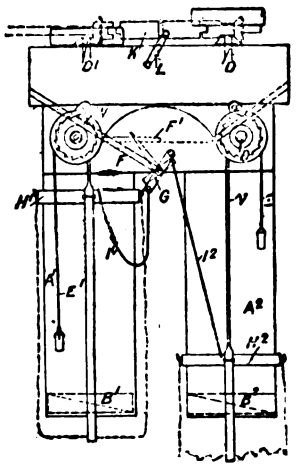

Filling chaff into bags. The machine consists of two cylinders A^1, A^2, with rotary screw packing-presses B^1, B^2, which are brought alternately into action as each bag is filled. The bags are attached to the platforms H^1, H^2, encircling the cylinders A^1, A^2. The platforms are suspended by belts or chains *v*, which are wound upon pulleys on the spindle D. The spindle can be rotated to wind up the belts *v* and thus draw the bags up over the cylinder by a rope E wound on a wheel on the spindle D. The bags are retarded in their descent by a friction brake W placed on the spindle D. A deflecting-board F is placed between the cylinders to direct the chaff from a hopper into the cylinder for the time being in action. The deflecting-board F is provided with a lever G, which is connected by chains I^1, I^2 to the platforms H^1, H^2, so that when each bag is nearly full the descending platform H^1 or H^2 pulls on the chain I^1 or I^2 and reverses the position of the board F. In a similar way the lever L which

Digitized by Google

actuates the clutch K for driving the spindles D^1 of the screw presses B^1, B^2 is reversed, thus throwing the one press out of gear and starting the other one. The clutch K may be replaced by equivalent mechanism, such as fast and loose pulleys &c. The deflecting-board F may also be replaced by a sliding valve F^1, actuated either by hand or automatically in a way similar to the board F.

16,925. Warnes, W. Dec. 8.

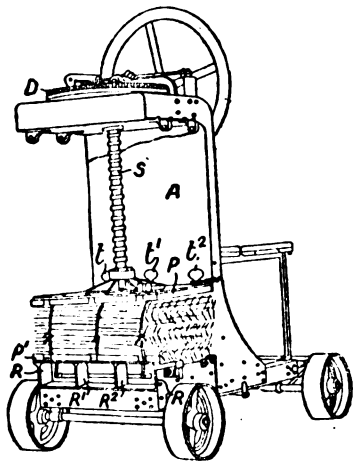

Baling-presses combined with weighing-apparatus. The platform P^1 of a baling-press is mounted on weighing-levers, so that the material can be weighed and pressed on the same machine. After the platform has received its predetermined weight of hay &c. it sinks on to the ribs R, R^1, R^2, when the platen P descends and compresses the material to the desired extent. In order to ensure uniformity in the size of the bales there are holes *t*, t^1, t^2 in the back plate A, through which the binding-cords are passed from their reels, so that no access is possible to these cords until the platen has uncovered the holes. The wheel D which gives motion to the screw S has two sets of teeth, the inner for rapid descent and the outer for giving the final pressure. The whole machine is mounted on wheels, as shown.

16,998. Duxbury, J. Dec. 10.

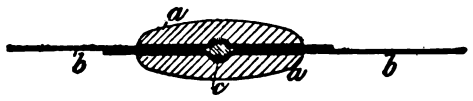

Bale-tie fasteners.—The ends *b* of the hoop are passed through a slit in the metallic box *a*, and are there secured by a pin or wedge *c* passed transversely through the case between, or at one side of, the hoop ends, which are thus bent and jammed into a recess in the case, as shown.

17,274. Thompson, W. P., [*Kerr, W. H.*]. Dec. 15. *Drawings to Specification.*

Sacks and like bags for seeds, tobacco, &c. are made in a special machine by first homming the two edges of a strip of cotton or other bag material, next severing from the strip a portion sufficient for one bag, then folding the material parallel with, and midway between, the two hems, and finally joining the edges extending from the fold to the outer edges of the hems.

17,587. Perkins, J. B. S. Dec. 21.

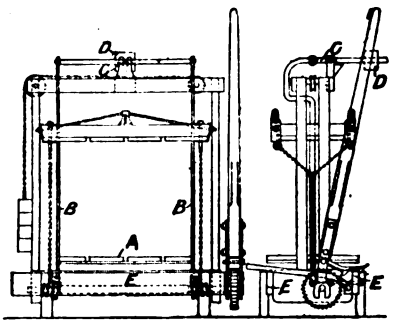

Baling-presses combined with weighing-apparatus. The platform A, on which the material is placed, is connected with the scale beam C by links B, B. When the proper weight of material is put on, determined by the weight D, the scale-beam rises and the platform rests on the frames E, E while the material is being pressed. The pressure is effected by chains connected with the top platen and wound on the driving-shaft at the base of the press or on "snail rollers" thereon for giving an increasing pressure, the said shaft being worked by hand through ratchet or toothed gearing. The platen moves between channel-iron or other standards, and may be provided with guide-rollers. The platen may be also worked upwards, and other modifications in detail are described.

18,028. Arbey, L. Dec. 31.

Packing-materials.—Wood shavings are employed as a packing-material for fragile articles of glass, pottery, &c.

Digitized by Google

A.D. 1888.

730. Weidenbusch, A. Jan. 17.

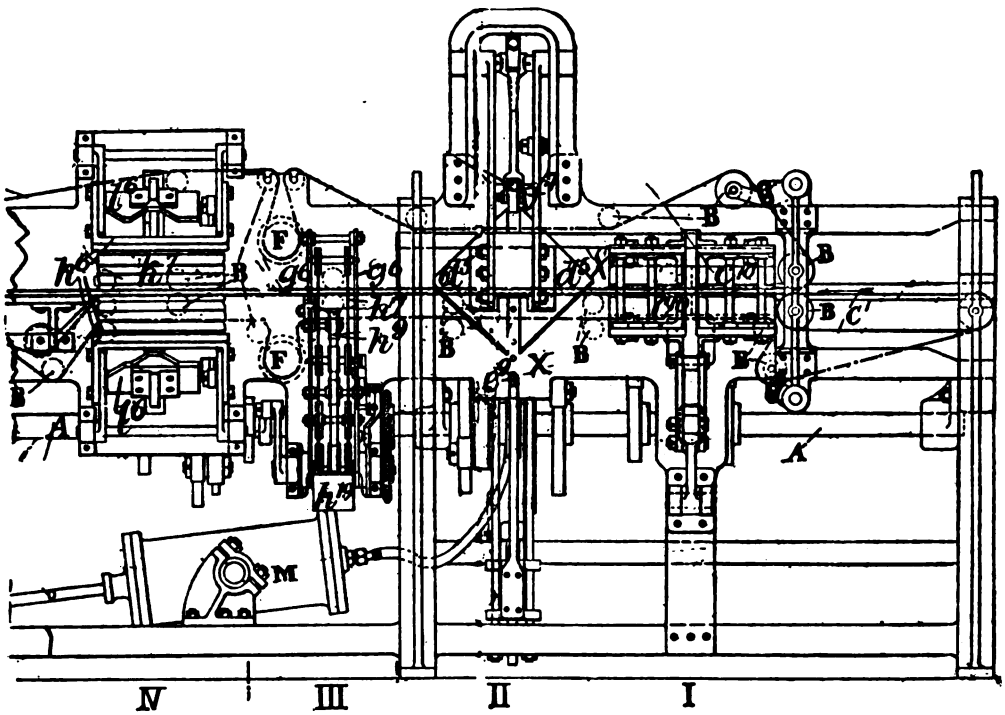

Paper and like bags, making. Square or block-bottomed paper bags are formed from tubular blanks in a machine shown in part side elevation in the Figure. The blanks are carried through the machine, with their bodies transversely to the length of the machine, and with the end which is to form the bottom, at the front side (as shown in the Figure) of the machine, by endless tapes which intermittently travel round rollers B and weighted tension rollers F. The blanks are stopped, previous to clamping, in their proper positions for each operation by oscillating combs, the teeth of which project through the bands. An additional band C^1 supports the overhanging end which is to form the bag bottom. The blank is creased in section I of the machine by clamping between a pair of triangular plates, the upper one of which is movable, and then turning the protruding corners upwards and downwards by angle plates c^{10}, having a wiping action. The space between the plates is adjusted by screwed rods. The diamond fold is formed in section II of the machine, the diamond being formed at right-angles to the flattened tube, thus ⊢, by folding it against side plates X. One plate X has perforations communicating with an air cylinder M. The bottom is folded upon the plate X, where one thickness is held by suction, by means of a roller f^7 passing down the front of the plates X. The upper part of the bottom is laid upon one plate X by the upward movement of a roller e^9. An oscillating presser plate d^5 then presses the folds. Three endless tapes h^7, h^9 dipping in a paste trough h^{19} and carried by an oscillating frame g^6 deposit paste, thus ⋃, upon the diamond. To prevent deposit of paste when the bag is absent, a stop is interposed between the frame g^6 and the machine frame. This stop is connected to a feeler, which is pushed upwards by a spring when no bag is present. The feeler is lowered by a bent lever at each outward movement of the frame g^6 so as not to interfere with the placing of the next bag blank. The bottom is creased by blades k^6 entering notches k^7 in the side plates. The upper and then the lower

Digitized by Google

(overlapping) flap are folded upon the bag bottom by plates l^6, the upper one of which is notched to fit a projection on the lower one. The bag is next carried between curved plates which turn the bottom of the bag flat upon the tube to facilitate packing. After passing between endless pressing-cloths the completed bag is delivered. These parts are not shown in the Figure. Motion is given to the various parts by levers &c. engaging cams on the main driving-shaft A, which is geared up to driving-pulleys at the delivery end of the machine. The parts can be adjusted for various sizes of bags.

---

754. Hawley, C. P. Jan. 17.

Bale-tie fasteners.—Relates to cleats or fastening-devices for the ligatures of packages or bundles. A single piece of wire is bent into a loop *b* for the permanent attachment thereto of one end of the string, the ends B, B¹ being bent as shown to form a cleat for holding the other end so that it can be readily unfastened. A transverse steadying-bar D may be attached. Slightly-modified forms are described.

1211. Wilcox, G. Jan. 26.

Packeting and filling tobacco.—Relates to parcelling tobacco in a paper packet which can also be used as a pouch. A flat paper tube is cut as shown in dotted lines in Fig. 1, and the remaining tubular part is then turned inside out as shown in Fig. 3 and, the tobacco being placed therein, the paper is rolled around it and the ends turned in as shown in Fig. 4. The overlapping ends 5, 6 form the mouth of the pouch, and another piece of paper may be attached to the upper one so as more completely to cover the same. The invention also comprises a machine, Fig. 5, for forming a similar combined packet and pouch from sheets of paper &c. stamped out to the form shown in Fig. 9. The sheet of paper is placed on the block *c* with the slits engaging with pins *f*; the hollow

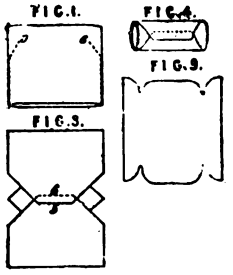

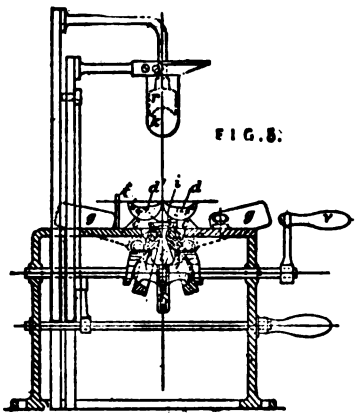

block *k* is then lowered on to it, and causes the segmental folders *d*, *d*¹ to turn partially upon their axes and double up the exposed extremities of the paper against the block *k*, which latter is now filled with tobacco. The plunger *r* descends thereinto and compresses the tobacco, when the side and bottom folders *g*, *i*, which turn in and fold over the ends of the packet against the outside ends of the block, are set in motion. The hopper *k* and plunger *r* are next withdrawn, and the ends of the packet are then sealed by the operator.

2919. Howard, J. H., Howard, J. H., and **Bousfield, H. T.** Feb. 27.

Baling-presses for hay, straw, &c. The material fed into the receptacle *g* is carried to the endless platens *a* by the conveyer *h* and a reel (not shown). The platens consist of inclined slats *w* on the face of endless chains passing over the sprocket-wheels b^1. The chains being mounted to converge as shown, the material is forced by the inclined slats into the narrow neck and thus on to the table *j*, where it is lashed, a gap *l* being made in the table for the purpose. For retaining the pressure on the material while lashing, a cramp, Fig. 5, is used, consisting of bars k^1, k^2 connected together and actuated by a hand-lever k^3 as shown. The several bales can be separated by cutting, or, if the material does not admit of this, the material for each bale must, in the first instance, be partitioned off. Instead of the platens described rollers may be used. The plates may also act vertically or in any suitable manner. The sprocket-wheels b^1 are actuated by ratchet gearing, the motor mechanism being carried overhead. The conveyer *h* and feeding-reel are in gear with one of the shafts carrying the sprocket-wheels. The press is on wheels *z*.

(*For Drawings see next page.*)

Digitized by Google

2919.

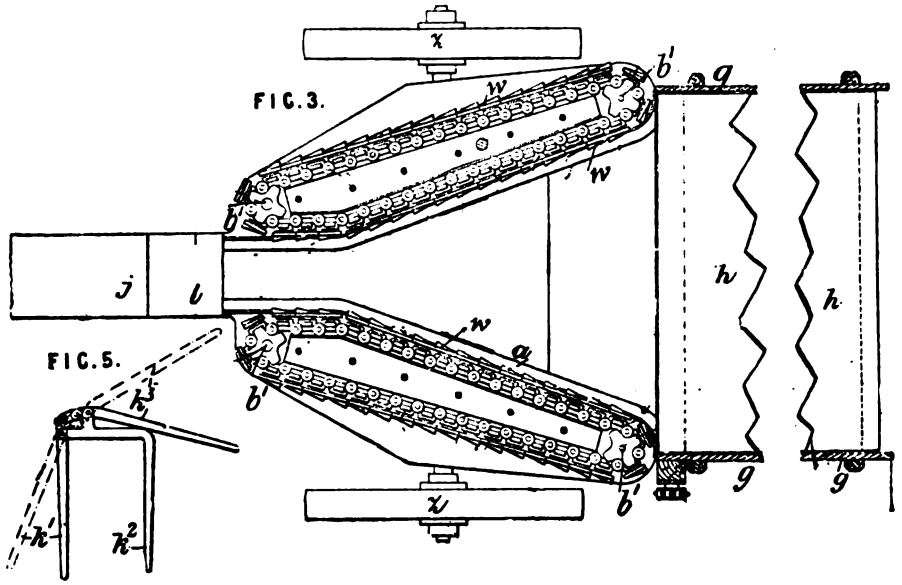

2954. Brooks, W. Feb. 28.

Paper and like bags.— Strengthening-pieces A of wood, wire, sheet metal, &c. are fixed to the middle of the upper edges of the bag, and cords G for carrying the bag are threaded through holes C in the pieces A. The corners I of the bag can be folded in as usual, and the mouth of the bag can be held together by cords tied through holes D in the pieces. One of the cords G may be threaded through a handle H for convenience in carrying.

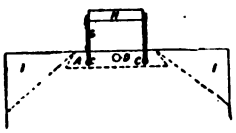

3019. Goode, C. P. Feb. 28.

Wrapping or covering materials.— Compressed and baked blocks of animal food are packed in canvas or gunny for transport, no hoops or bands being used.

3038. Bradbury, J. Feb. 29.

Baling-presses combined with weighing-apparatus, for hay, straw, clover, &c. The pressing is accomplished by the descent of a head upon the material while still upon the weighing-platform. This platform is seen at U carried by the lever W, which has at its other end a weight scale Y, and is steadied on the "Roberval" principle by rods *a*, *b* and links *d*, *e*. Above the platform is a head-block *g*, which is brought down upon the hay &c. by winding up the chains *h* upon the windlass shaft C. This is accomplished by hand gear consisting of a bevel-wheel N, driven by a handle on its shaft, which gears with a corresponding wheel M on the

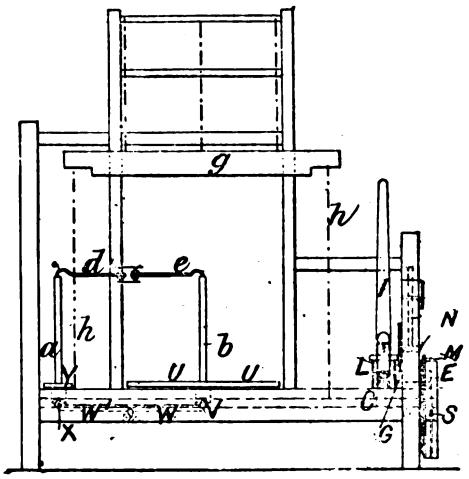

shaft C. When the head reaches the hay an increased pressure is brought to bear upon it by ratchet gear, the wheel N meanwhile being put out of action. The ratchet handle I drives the wheel L, which is on the same shaft as the pinion E, and this gears with internal teeth on the wheel M. After trussing the pressure is relieved, and a brake prevents the too sudden rebound of the head.

Digitized by Google

3405. Low, W., and **Sharp, D.** March 6.

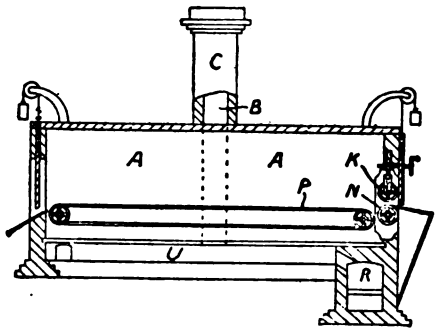

Sacks and like bags, drying. The sacks are passed between pressing-rollers K, N to an endless travelling wire-gauze band P in a chamber A, one of which is arranged on each side of the chimney B, connected by flues U to a furnace R at one end of each chamber.

3527. Satchell, T. March 7

Paper and like bags.—The bag is strengthened and made airtight at the side edges and corners of the mouth by overlapping as shown, the edges of the mouth being similarly strengthened. The mouth is closed by a label K, or by a strengthening-band.

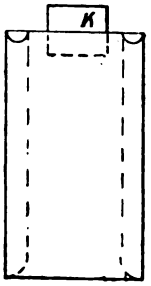

3787. Pearce, T. J., and **Beardsley, M. W.** March 12.

Wrapping or covering materials.—Paper or strawboard is coated or saturated with maltha (petroleum distillation residue), and used as a waterproof wrapping or packing material.

3805. Cummins, A. H. March 12.

Baling-presses for cotton &c. The press has a number of baling-chambers E which are carried over filling-chambers, and then over a ram D for the final pressure, as described in Specification No. 1005, A.D. 1885. In the present invention the framework is dispensed with. The chambers E are preferably carried on arms F mounted on roller bearings on or in the cylindrical post or pivot G, and are secured to the filling-boxes by T-shaped bars $H^{\times}$ pivoted to the latter. These engage in recesses in the base of the former, being

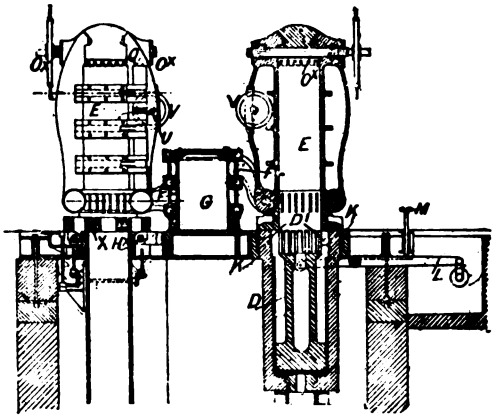

actuated by a hand-lever through bevel &c. gearing. The chambers are fastened to the cylinder D^1 by the ring K actuated by the treadle M acting on the counterweighted lever L, the said ring having segments on its inner face corresponding with segments on the base of the chamber, and both sets of segments preferably having screw threads, so that on rotating the ring when lifted the fastening is made. The chambers E preferably consist of two sides hinged at the base and actuated by a threaded shaft, the two other sides being hinged vertically and closed by bolts which are shot by projections on the vertical spindle Q, which is actuated through worm &c. gearing from the hand-wheel V. The material is retained in the chambers E by sets of grid-fingers mounted on axes as described in the previous Specification.

4580. Hancock, E. March 26.

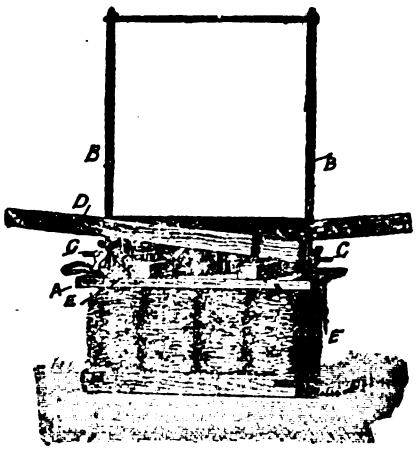

Baling-presses.—The press supports are provided

Digitized by Google

with ratchet teeth B in which the pawls C in connection with the platen A engage, thus maintaining the pressure when the compressing-levers D are released. The ends of the latter engage in holes in the standards, and they are worked on movable fulcrums E.

4924. Ruck, H. April 3.

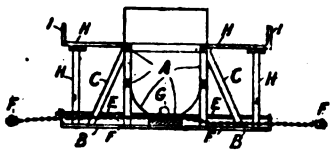

Baling-presses.—Relates to means for trussing straw, hay, flax, &c. The chains F, attached at one end to hooks G beneath the box or press A and secured in pairs at their other ends by treadles or bars F, F, are brought over or round the material in the box, which is slotted for the purpose, until the treadles rest on the incline C. The men then stand on the treadles and at the same time beat down the material with mallets until this is sufficiently compressed. The bale is secured by straw ropes E retained by clips to the platform B. A number of these ropes are held in readiness on a stand H between teeth I thereon.

4973. Dowling, J. P. April 3.

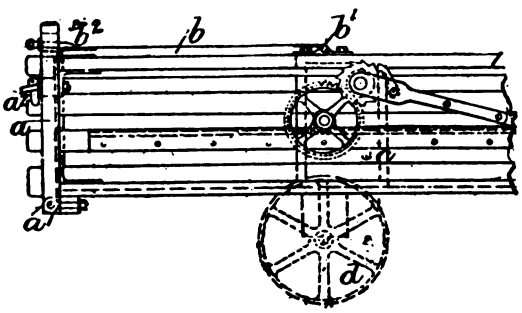

Baling-presses for hay, straw, wool, &c. The platen *c* moves horizontally, being worked by a rack or screw &c. by hand, hydraulic, or horse power, through any suitable gearing. Both ends *a* of the press are hinged at a^1, and are secured by cottars a^2. A half cover *b* is hinged at b^1 so as to be turned over either half of the press, being secured by catches b^2. By this arrangement a bale is compressed at either end, and one half can be filled while the bale is being formed in the other. The press may be on wheels *d*.

5066. Clapp, J. A. April 5.

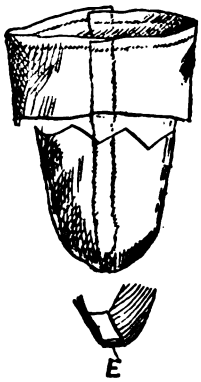

Sacks and like bags.—The material, the ends of which are hemmed, is doubled, and to form the bottom the bend or crease is folded as at E, and the folds sewn at the edges on the inside and outside. The edges of the body are then overlapped and correspondingly sewn. The sacks are specially adapted for coal &c.

5159. Tomlinson, J. April 6.

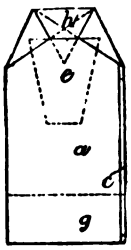

Paper and like bags.—The paper or linen &c. for the bag is folded into three parts, the two outer of which *a*, *c* are gummed &c. together. The part *a* has two slits cut in it so that the piece *e* between the slits can be folded inwards as shown in dotted lines, leaving an open pocket between the parts *a*, *c*. The corners of the open end of the envelope bag are folded to form a tongue *h* which is turned over and inserted in the pocket. Instead of the pocket a slit may be formed through the parts *a*, *c*. The closed end *g* of the bag may be gummed &c. together for the affixing or impression of stamps, and to keep the envelope or its contents from injury.

5391. West, D. K., [*Thornton, R. S.*]. April 11.

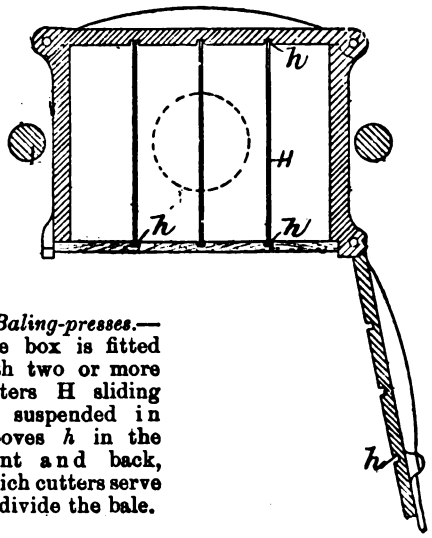

Baling-presses.—The box is fitted with two or more cutters H sliding or suspended in grooves *h* in the front and back, which cutters serve to divide the bale.

Digitized by Google

5585. Bonvillain, P., and **Guyon, F. L. J.** April 14.

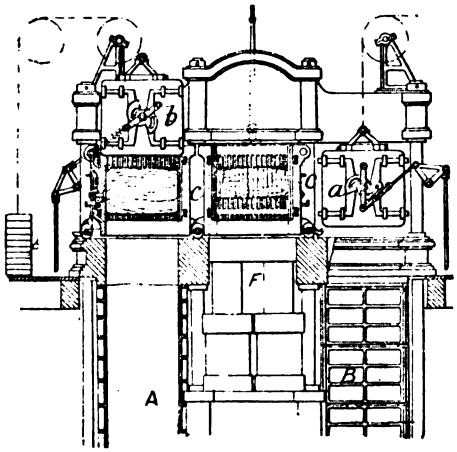

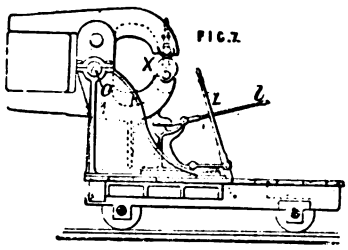

Baling-presses for cotton, hemp, &c. Three hydraulic presses A, B, F are combined so that material can be fed into one press while one of the other presses is giving initial compression to another bale, and while the intermediate press F is finally pressing a third bale previously pressed in the press which is being filled. Apparatus is provided for conveying the partly-pressed bale direct from the presses A, B to the finishing-press F and for removing the finished bale out of the latter for tying or binding. The material, after being fed into the chamber of one of the presses A, B, is pressed into a carriage *c*, which is closed by gates *a*, *b*, and which has two compartments, coinciding with the finishing-press and also with one of the initial presses according to its position. The finished bale is removed from the press F by the vice, Fig. 7, and the carriage is moved to bring the empty compartment over the press just filled and the partly-pressed bale over the finishing-press F. A grid carried by a travelling truck is passed under the partly-finished bale to form the bottom of the carriage *c* while carrying the bale to the finishing-press. The gates *a*, *b* are counterbalanced by weights and are raised automatically to fill the presses. The vice used in binding the bale is mounted on trunnions O, and the jaws, which are forked, are held closed, when receiving a bale, by a cam X. Levers L, *l* are provided to bring the jaws into a horizontal position for extracting the bale from the press, and for tilting them to deliver the bale when bound.

6003. Fleetwood, D. J., and **Henwood, J. L.** April 23.

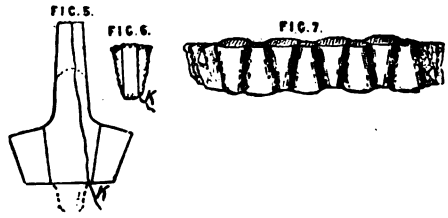

Wrappers for tobacco. Consists in forming tobacco into separate charges, loads, quids, or plugs, either by moulding or by punching pieces out of a rolled strip or cake. Wrappers or cases for containing the same are described. Fig. 5 shows a blank of paper which can be folded into the form shown in Fig. 6 for holding a single plug of tobacco and provided with a string K for tearing it off when required. Fig. 7 shows another series of paper cases formed from three strips of paper.

6013. Wise, W. L., [*Maggi & Co., J.*]. April 23.

Wrappers. — Several packages or quantities of the same article, or of different articles, such as food preparations, are enclosed in a wrapper or wrappers A having perforated &c. lines i^1 so that each article and its enclosing-wrapper can be removed separately.

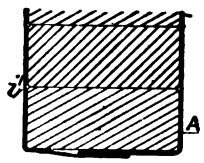

6034. Mayos, T. T. April 23.

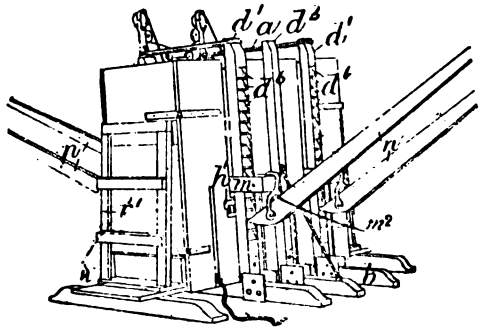

Baling-presses for compressing hay, straw, and the like. The press is made up of pivoted standards d^1, d^2, &c. supported and held in position by struts &c., the back standards having attached thereto a plate or piece extending the whole length of the press, and the front standards a middle piece, at both sides of which are hinged doors. One end

Digitized by Google

of the press is provided with a hinged door secured by a suitable catch. The straw, hay, or other material is filled in at the top and trodden down, ladders r^1 being attached to the ends for the purpose. The platen is counterweighted and is attached to frames m which project beyond the standards at the front and back for engaging with hooks m^3 on the levers n by which the pressure is effected, the levers engaging with teeth d^3 on the standards, and the pressure being maintained by pawls. The Provisional Specification states that other gearing may be used. Slots &c. are provided for lashing. To remove the bale the front and hinged end parts are swung open.

6118. Bellhouse, E. L. April 25.

Baling-presses, hydraulic, for packing cotton and other textile materials, fodder, &c. Consists of an arrangement by which three ascending degrees of pressure are successively obtained. The water from the accumulator &c. passes from the pipe f along the pipe g through the check valve z and down the hollow fixed ram e, thus forcing down the hollow trunk piston d, which forces the water from the cylinder a through the check valve x, pipe j, and counterweighted valve k, to the pipe n leading to the press. The initial pressure thus conveyed to the press rams is obviously less than that of the accumulator &c. When, however, the resistance to the downward passage of the ram increases the counterweighted valve m in the pipe l, provided with a check valve y and communicating with the hollow ram e, and with the press, as shown, is opened, and thus direct pressure from the accumulator &c. is obtained. Lastly, when the pressure further increases, the counterweighted valve i opens, and thus allows the water to flow from the pipe h to the cylinder a, thus forcing up the piston d and forcing the water, in the latter, through the ram e to the press at a further increased pressure. When the pressure rises to a certain point the valve k closes and the operation ceases.

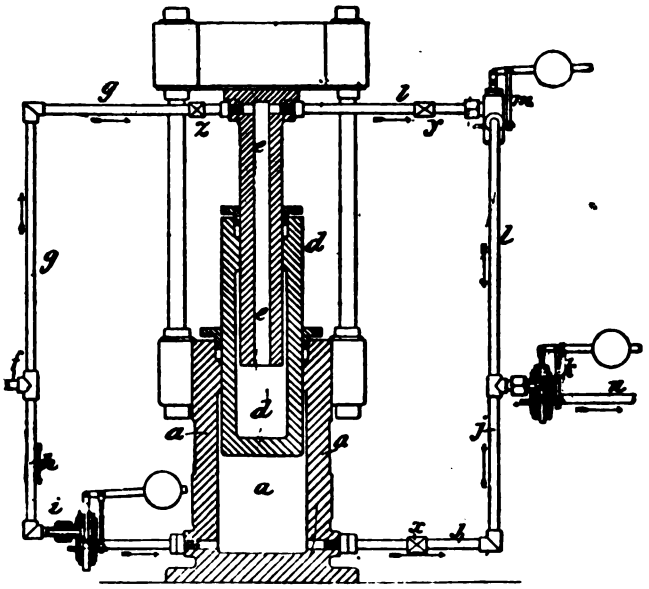

6162. Wigney, C. McL. April 25.

Clips or holders for artists' canvases and the like.—Relates to holders or clips for securing together two or more pictures or other frames, pictures, &c. so that they can readily be stored or carried about without the faces coming in contact. A plate A, fixed by screws &c. a to one frame, has slots b engaging pins B on the other. The slots may be of various forms, such as L, Z, or U, or may form a bayonet-joint or a spring opening.

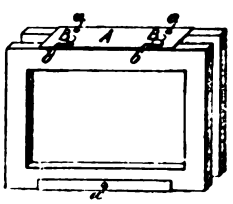

6387. Gray, W., [*trading as* Gray, Dunn, & Co.]. April 30.

Parcelling biscuits &c.—Biscuits, cakes, and the like are formed into packets containing definite quantities by tying or securing them by means of ribbons, bands, slips, or tapes of paper or other suitable material, preferably as transparent as possible. The Figure shows a number of biscuits secured by a number of strips of paper. The arrangement of the strips &c. may be variously modified.

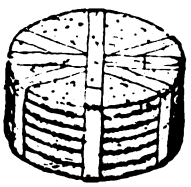

Digitized by Google

6423. Goldart, T. May 1.

Parcelling soft soap.—The soap is placed in a box A round which is folded first a sheet B of brown paper, then a second sheet D of brown paper, and lastly a larger sheet of parchment paper E; the whole is fastened up by adhesive material.

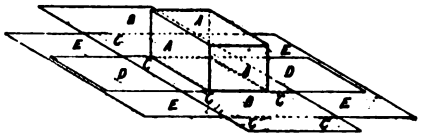

7144. Smith, W. S. May 14.

Bale-tie fasteners.—The appliance, which is intended for quickly and securely binding sheaves and packages, for reefing sails, &c., consists of a stiff piece *a* having an aperture *b* for attachment of one end of the string &c., and a wedge-shaped slit *d*, in which the other end of the string &c., is jammed and thus secured. A cleat may be used in addition, or the cleat may form with the piece *a* a wedge-shaped opening, thus dispensing with the slit *d*.

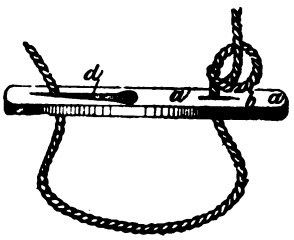

8442. Blair, M. J. June 9.

Paper and like bags. — Relates to a bouquet holder. A semi-circular piece of paper A is creased radially, and the straight edges are joined together to form a collapsable conical bag or holder for carrying flowers in. A circular creased cover C and carrying-handle B attached at B^1 may be provided.

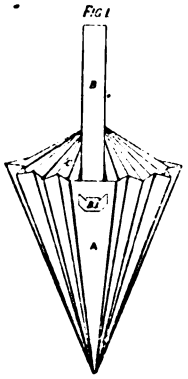

8523. Crosland, W. June 11.

Baling-presses.—The Figure shows two opposite end views of part of the press. The movable platen C is actuated by one or more levers F, at one end of which the power is applied, the other end being held by springs U or weights, which yield, until the pressure exceeds a regulated amount, when the end of the lever F comes in contact with

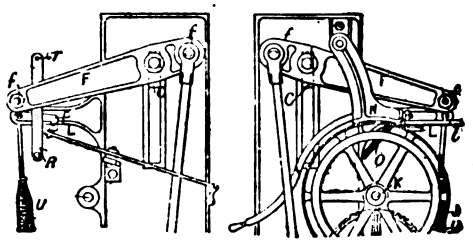

a pin *r* in the lever R, which raises the catch P, releasing the stop rod L, which carries the strap fork *l*, thereby drawing the driving-strap off the fast pulley J on to the loose one. At the same time a brake N is brought down and held against the pulley J by the spring O, and the pressure may be thus maintained for any desired period. Means for actuating the levers F other than those described, may be used.

8612. Greenhill, M. C., and **Hindle, C. L.** June 12.

Clips or holders for artists' canvases and the like.—Consists in a clip or clamp A for packing paintings or canvases closely without contact. The clip is formed of wire, spring steel, or other suitable material, the external arms *a* being provided with claws or hooks *b*, *b*, which press into the wood of the canvas frame as shown.

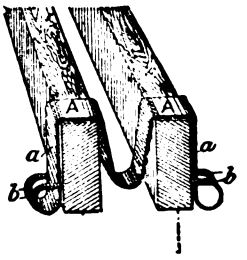

9031. Allen, V. I. June 20.

Baling-presses.—A pressing-chamber or cage for hay &c., which may be mounted on wheels or rollers, is formed of bars and tie-rods A, preferably of angle-iron. On one side near the top is a door or guard consisting of bars P pivoted to a top bar and connected at the bottom by a bar P^1 having a handle P^2, by which the door can be swung to the right or left as shown in dotted lines. When depending normally the door is retained by catches. Within the cage is a bottom or platen D secured to a framing *d* having at each end racks E, by which the platen is actuated through gearing as shown in Fig. 2. Uniformity

Digitized by Google

of motion is given by connecting the actuating-shafts H by a countershaft P through the bevel gearing M, N. A pawl lever $i^{\times}$ engaging a ratchet-wheel i retains the platen in position. The top plate may be adjusted by hand-wheels and screws.

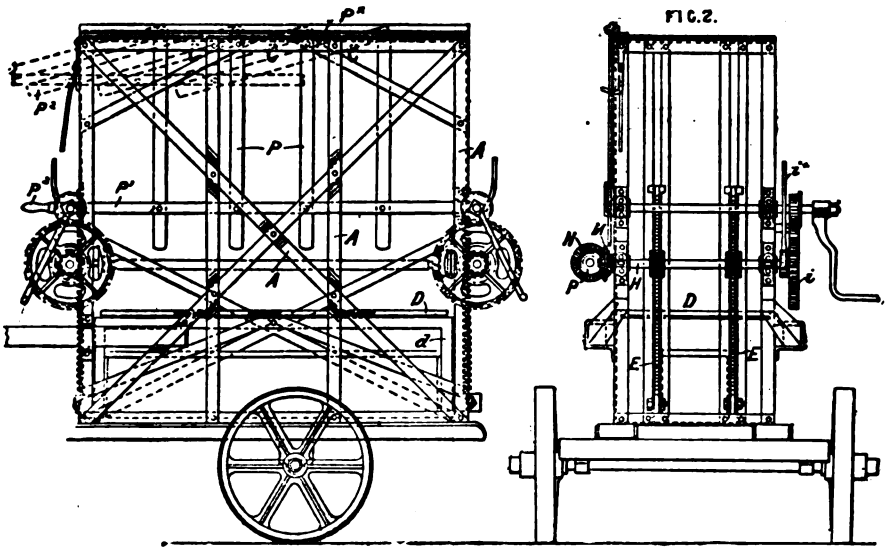

FIG. 2.

9789. Corrigan, J. July 5.

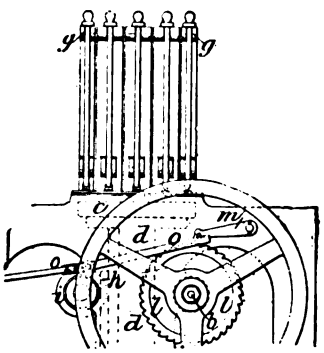

Baling-presses for bundling yarns. The follower *d* of the table or platen *c* is actuated by the pinion *i* and the rack *h* attached to the follower. On the driving-shaft *b* is a ratchet-wheel *l*, over which the pawl *m* is held raised by the lever *o*, until the latter is released by a projection on the follower, which, when the bundle is sufficiently pressed, tilts a combination of levers in connection with the lever *o*, thus allowing the pawl to drop to maintain the pressure. The hinged top bars *g* have a backward projection for facilitating the opening of the same. Other arrangements for the same object are described in the Provisional Specification, such as a series of sliding bolts or latches arranged to be operated simultaneously.

10,126. Clyne, J. July 12. *Drawings to Specification.*

Packeting tea &c.—The package is held in a frame, preferably adjustable, on a vertically-movable table actuated by cams, the fall of the table being arrested by springs. According to the Provisional Specification, a funnel with a raised central portion supported by rods may be used for spreading the material.

10,277. Freeman, T. July 16.

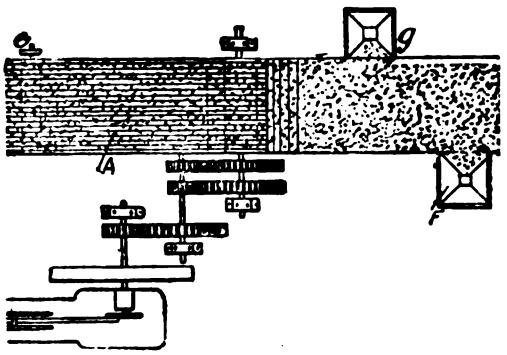

Filling coal into sacks. The object is to load screened and sorted coal into sacks, which are then sealed and not again opened until delivered to the customer. The screened coal is passed to a band

Digitized by Google

conveyer, from which it is fed into sack fillers F by flaps *g*, which can be lifted away when sufficient coal has been received. These sack fillers are mounted or hung on weighing-levers, and the coal is either fed straight into the sacks or held in hoppers provided with a bottom valve.

10,564. Woodville, G. July 21.

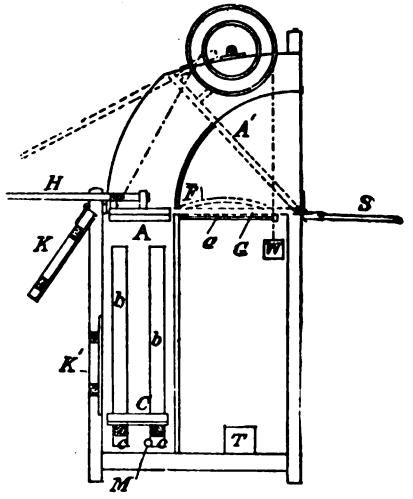

Baling-presses for trussing hay and straw. The material is passed from the folding table S into the press chamber A, the curved hinged door F being turned down on the platform G for the purpose. The chamber is closed at the top by a hinged counterweighted lid A', which is lifted and lowered by levers H connected therewith by catches. The platen C at the bottom has projections *c* passing through slits *b* in the ends of the chamber, the said projections having pulleys or rollers over which, and other pulleys mounted on the press, pass chains attached to scroll &c. rollers on the actuating-shaft underneath. The latter is actuated by a lever and ratchet arrangement. The doors K, K' in front, one of which is hinged to the top and the other to an end, are fastened by a bolt which is automatically secured. Both the front and back parts of the chamber are slitted for lashing, the underside of the lid and the upper side of the bottom being grooved for the same purpose. To guide the tying-material over the truss tubular guides on a cross-bar are provided. The cross-bar is secured to or at each side to racks, which move in grooves and gear with pinions on a shaft for steadying the movement. Bolts on this cross-bar secure the lid. The binding-material is held in a receptacle T. The press is on wheels.

10,867. Whittaker, G. July 27.

Baling-presses.—The stillage K, Fig. 8, consists of a series of collapsable bars, Figs. 1 and 3, and fixed bars placed alternately, the former serving when collapsed to facilitate the lashing. The collapsable bars consist of the parts A, B having inclines C interlocking into one another as shown.

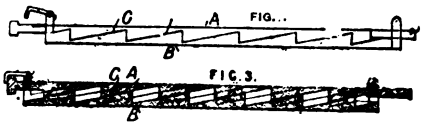

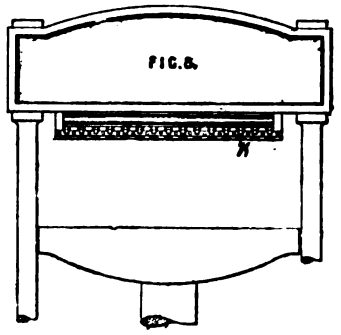

These bars are held extended as in Fig. 3, while the bale is being compressed, and are then collapsed as in Fig. 1, channels or grooves for the ties being thus formed.

11,820. McEwen, J. Aug. 16.

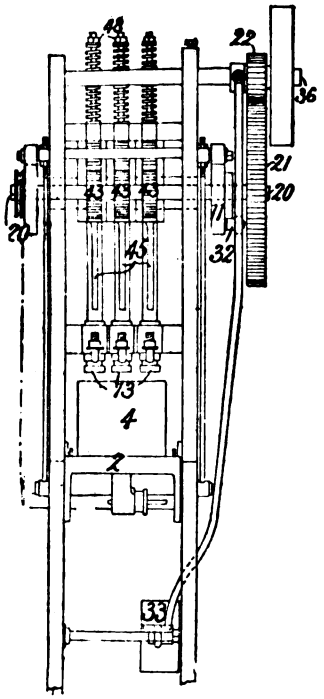

Bottling granular &c. substances.—Relates to means for filling bottles &c. with beer and other

Digitized by Google

beverages or with mustard or other powdered substances and for corking. The box of bottles 4 runs on the table 2, which is raised by the cam 11 up to the filling-nozzles 13. The syrup pumps are driven from the cam shaft 20 by eccentrics. The driving-shaft 36 is pivoted at the end, and the spur-wheels 21, 22 are caused to gear together by a counterweighted treadle 33 and are held in gear by a cam 32 while required for raising the table, syruping, corking, or stoppering with the stoppers described in Specification No. 2857, A.D. 1887. The corking-plunger 45 is connected to a rack driven by a partially-toothed wheel 43 on the shaft 20, and is returned by an adjustable spring 48. It may be arranged in connection with the filling-nozzles or behind them for still liquids. The filling-nozzle is fitted with a spring so as to be adjustable to various bottles. When used for mustard &c. a funnel is placed on the top of the nozzle, and a tube leads the powder thereto and may have any suitable shaking-appliance. The corking-plunger may also press the powder into the bottle.

12,228. Dunn, J. S. Aug. 24.

Packing-materials.—Relates to mechanism for cutting wood shavings into narrow fibrous strips suitable for packing and other purposes. Broad shavings from a planing-machine are conducted by a hopper H or by a travelling band or an angled table between cutters on spindles A, A^1. The cutters consist of discs *a*, a^1 separated by washers *b*, b^1, the discs on one spindle rotating between those on the other. The cut shavings are cleared out and delivered from the cutter discs *a*, a^1 by the combs *c*, c^1 constructed as shown by full lines or by combs c^{11} or spindles c^6 with discs as shown in dotted lines. The apparatus can be mounted on the framework of a wood-planing machine, or may form a separate machine.

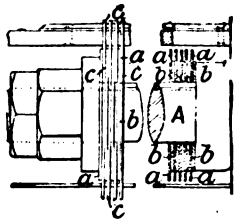

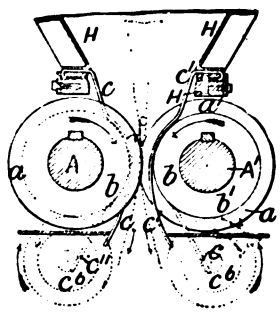

13,080. Bühler, A. Sept. 10.

Parcelling paper and envelopes.—The object is to pack up paper and envelopes in block form, and to provide holders for the packets. The packets are arranged so that single sheets and envelopes may be removed without disturbing the packet, and that a sheet may be written upon without removing from the packet. Fig. 2^a shows sheets of

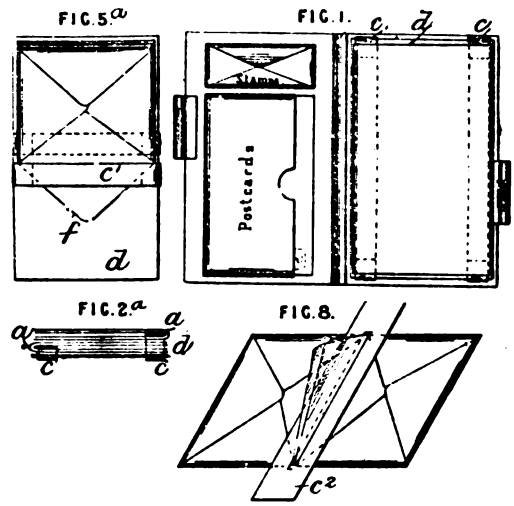

paper *a*, arranged in small packets, which are secured alternately the one side and the other by bands, strips, or wires *c* to a base *d* of paper or cardboard. Envelopes are packed in a similar manner. Fig. 5^a shows another arrangement, the flaps *f* being held by a band or strip c^1 to a base *d*. Fig. 8 shows a modified arrangement. The envelopes are laid touching one another, the flaps passed up through a slit in the strip c^3, which is afterwards secured to a base by cementing the ends, and additionally by a paper strip, shaped like a paper fastener and passed through the slit between the envelopes. One, two, three, or four packets of envelopes may be arranged on one base. The packets of papers and envelopes may be put into ordinary packages or into holders as shown in Fig. 1,

---

13,668. Turney, J. M., [*trading as* G. L. Turney]. Sept. 21.

Carding pins; wrappers.—The object is to facilitate the selection of pins of particular sizes. The pins are struck in rows upon several sheets *a*, *b*, *c*, which are attached at *e* to the sheet *d*, serving as a wrapper, and are of slightly different lengths as shown, to facilitate turning over. The pins on different sheets, which may be differently coloured, are of different sizes.

Digitized by Google

14,655. Aimers, J., and **McLean, P.** Oct. 12.

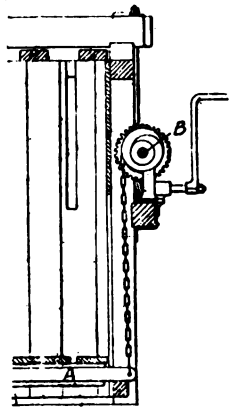

Baling-presses.—On the ends of the iron or wooden press box are mounted two shafts B, on each of which are two cylindrical or scrolled drums, carrying the lifting-chains, which are attached to the platen A. The shafts B are actuated by worm gearing, as shown, the worm sliding on its spindle for rapid descent of the platens. The material is inserted through the top, and there are doors at one or both sides. The press is adapted for compressing hay, straw, moss litter, paper, &c.

15,193. Lindon, H. Oct. 23.

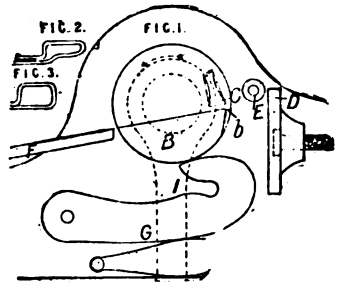

Bale ties and bale-tie fasteners.—The loop in the end of the band is made to receive a rectangular pin instead of a round one. Figs. 2 and 3 show the kind of loop formed. One end of the band may be bifurcated to receive the other end between its two parts. Buckles are made of H-shape and of straight sheet metal, with round and rectangular pins, which are secured by riveting or by driving tongues on the buckles into notches in them. The buckles may also be cast, punched, &c.

15,374. Idle, T. W., [*Clarke, G. R.*]. Oct. 25.

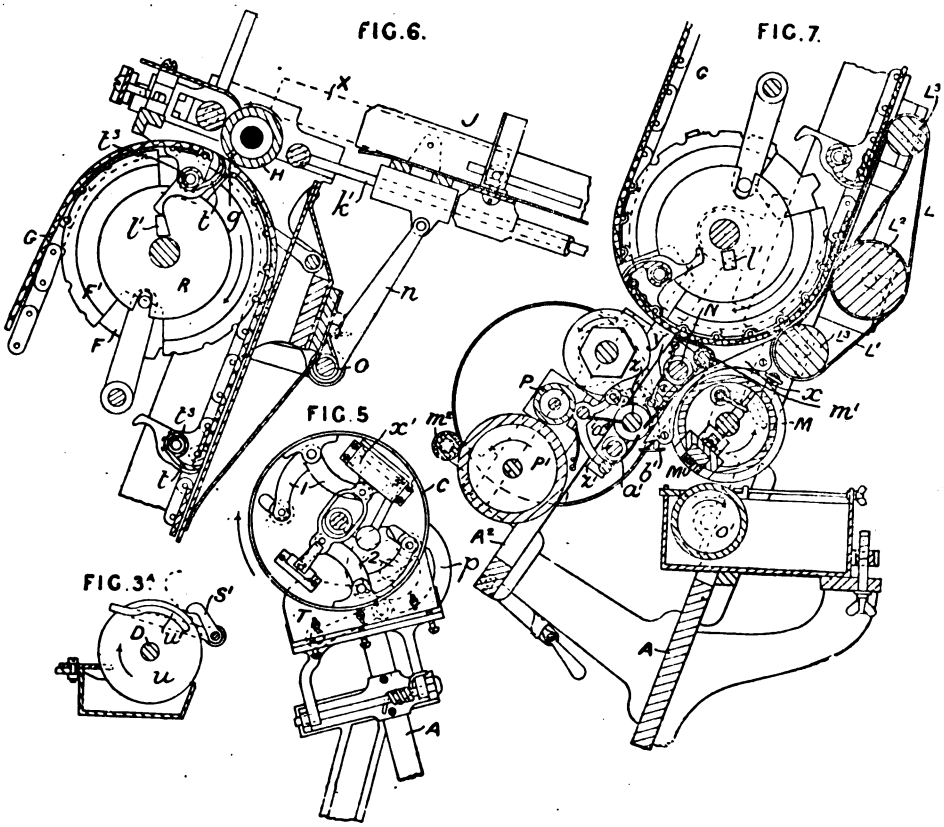

Paper and like bags, machines for making. The invention is described with reference to the manufacture of envelopes, but it is stated to be applicable for making paper bags. The blanks are fed

Digitized by Google

into the machine by a pneumatic feeder. One of the lateral flaps is then gummed, and both are folded over and secured while the blank is carried on an endless carrier; the bottom flap is then gummed and folded over, and the envelope delivered for use. Fig. 6 shows a sectional elevation of the upper or receiving end of the machine, and Fig. 7 a corresponding view of the lower end. The blanks X are placed in a carrier J, Fig. 6, which is secured to a sleeve reciprocated on an oscillating arm k by arms n on a rocking shaft o, worked by a cam. The blanks rest upon a roller H, which is hollow and connected with an air pump; the lowest blank adheres to the roller at the openings g, and s carried round, thus being fed to the grippers t. These grippers are fitted on cross-pieces on an endless carrier G, formed of two endless chains connected by cross-rods supporting leather or like strips, and running on sprocket-wheels F and drums F^1. The grippers t are normally closed by a spring t^3, but are opened when required by the action of a lug l^1 fixed on an adjustable disc R. The blank is thus seized and drawn through the apparatus. The air pump, consisting of a cylinder and piston x^1, Fig. 5, is carried in the driving-pulley C. The cylinder is in communication with the hollow roller H, Fig. 6, and the piston is actuated by the links 1, 2 and cam T carried on a rocking lever, and moved into and out of position by cams p. One of the lateral flaps of the blank is now gummed by coming in contact with a disc u, Fig. 3A, rotating in a vessel containing gum, and carried on the shaft D; arms or fingers s^1, u^1 are worked in connection with it by cams to prevent a short space at each end of the flaps from receiving the gum. The blank now passes on through a folder, in which the lateral flaps are turned over and afterwards pressed by passing beneath two series of endless bands L, L^1 carried on rollers L^2, L^3, Fig. 7. The grippers now open by the action of the lug l^1, and the partially folded blank falls between the guides x, y, formed like grids, in the spaces of which work the grooved guide-roller N, and the roller M for gumming the bottom flap. The gumming is performed by the piston M^1, which receives its gum from a roller o^1 by being projected by the action of cams and then withdrawn, carrying the gum to the blank. The roller N is provided with a recess registering with the piston to prevent its being gummed in case a blank should be missed. The flap is now folded by the action of the striker b^1, which drives it between the rollers z, z^1; it is then fed to the finishing-rollers P, P^1 and delivered ready for use. Oscillating combs and fingers a^1, a^4 work in the grooved roller to guide the envelopes to the striker and afterwards to the finishing-rollers. Flyers m^1, m^2 are provided to prevent the envelopes from adhering to the carrier G and roller P^1 respectively. The machine is arranged with the frame A slightly inclined and provided with a strut or support. The lower gumming and folding appliances are carried on a frame A^2 hinged to the main frame.

16,355. Marsh, J. Nov. 12.

Baling-presses.—Relates to a press for packing and the like, such as is described in Specification No. 13,401, A.D. 1887. The material is pressed between the parts C and D, which are made of the required form. The platen &c. C is preferably hinged by lugs e in slotted uprights o on the bed D, a spring f^1 being placed in the slot. Other means for hinging and guiding the platen may be employed. Hinged to the bed are two levers A carrying a cross-rod a on which the pressure link B is pivoted. The pressure link B is of V-form and engages with the platen direct, or by means of an adjusting-screw S. The screw S may be connected to the platen by a ball-and-socket or other joint V. A handle i is provided for operating the levers, and this handle may be carried by levers A &c. Stops t, u are provided to prevent the levers from being pulled over too far. In portable presses the joint V of the link and platen is made so as to be readily disconnected.

FIG. 1.

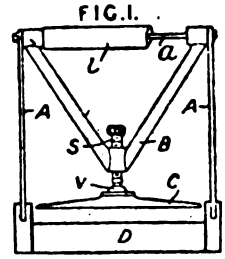

FIG. 2

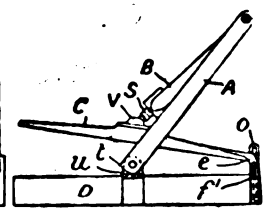

16,400. Stone, R. Nov. 12.

Sacks and like bags. — Relates to a waterproof and fireproof material for bags for containing cement, plaster, grain, and the like. A backing of tow, cotton, hemp, &c. or woven wire is employed, and is covered with a hot composition, put on with a brush, containing two or more of the following ingredients:—China clay, Staffordshire clay, Devonshire clay, marble, spar, shale, cement or plaster, or any other analogous material, together with tar oil; driers may sometimes be added. The seams of the bags may be made in the ordinary way, may be wire-sewn or riveted, or may be made with sheet metal or leather. The mouths of the bags may be closed by rivets, wire, or cord.

Digitized by Google

17,473. Stuart, O. Nov. 30.

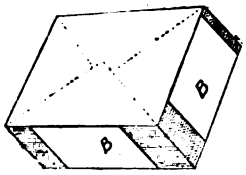

Parcelling envelopes &c. — Envelopes, postcards, &c. are fastened and held in bundles by paper &c. strips B, pasted to the edges, or by pasting the edges to one another. A holder, which may consist of a flat board with one or more securing-clips, may be used for the bundles, and this may be combined with a blotting-pad, inkstand, or other device.

17,474. Portillo, F. A. y. Nov. 30.

FIG.2.

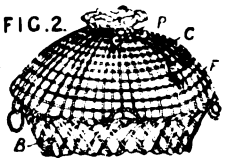

Sacks and like bags.—To the mouth of a sack or basket &c. B, or to a flat plate, is attached a network or canvas covering F, closed by a running-string C, and sealed by a string and lead seal P.

17,992. Bibby, J., Baron, J., Baron, W., and Duerden, J., [*trading as* Bibby & Baron, Limited], and **Bibby, J. T.** Dec. 10.

FIG.5. FIG.6. FIG.1.

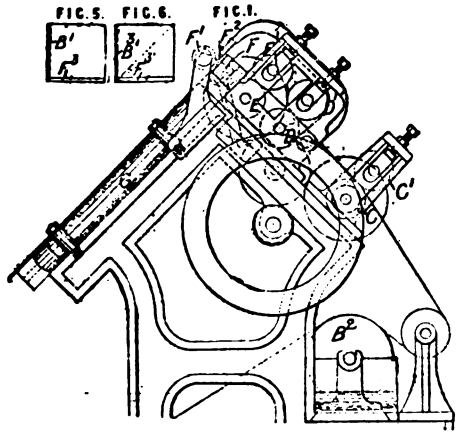

Paper and like bags.—Relates to the making of conical bags by a continuous process. The material is fed from a reel over a pasting-disc B^2, by which one edge of the strip is pasted. From thence it passes through the feed-rollers C, C^1 to the cutting-rollers D, D^1, by which the strip is cut into blanks. These are then carried by the rollers E, E^1 to the creasing-rollers F, F^1, in conjunction with which works the vertically-moving folding-blade F^2 for folding a narrow edge of the blank, represented at F^2 in Fig. 5, B^1 being the pasted margin. The blank next falls on a plate having a diagonal slot, through which works a second folding-blade for doubling the blank diagonally along the dotted line, Fig. 6. The bag thus finished is carried away by the rollers G to the carrying-apron. In a modification, the first fold is effected by fingers acting on the overhanging edge of the strip as it passes over a roller. In making the diagonal fold the blank is turned round at an angle by carriers, the slit in the plate, which in this case is horizontal, being parallel with the rollers. A pasting-finger supplies paste to the parts of the strip which become the points of the finished bags. The rollers D, D^1 have a variable motion, which may be effected by elliptical wheels &c. The machine is adapted to produce bags of various sizes.

18,309. Wilcox, G. Dec. 15.

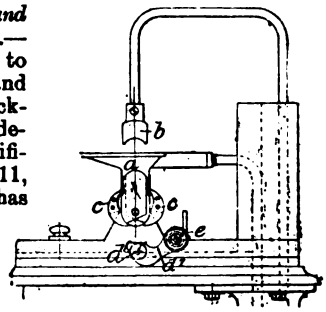

Packeting and filling tobacco.—Relates chiefly to the method of and apparatus for packing tobacco described in Specification No. 1211, A.D. 1888, and has for its object the fastening of the ends and flap of the packet by means of a stud or like fastener, which is inserted through the folds of the paper. This method of fastening is also applicable to other forms of package. The packing-apparatus is shown in the Figure. The hopper *a* and plunger *b* are operated by separate treadles. The folders *c*, *c* operate as in the previous machine, the ends of the packet being folded down by the fingers of the operator, or by modified end folders. Arms d^2, pivoted at d^1, carry spring piercers *e* for piercing the ends of the package for a stud or like fastener.

18,392. Ainsworth, W. Dec. 17. *Drawings to Specification.*

Paper and like bags.—Relates to apparatus for printing paper bags in connection with continuous-action paper-bag making machines. The bags may be printed either before or after passing the drying-cylinder, or partly before and partly after drying.

Digitized by Google

18,458. Jarbor, W. S. Dec. 18.

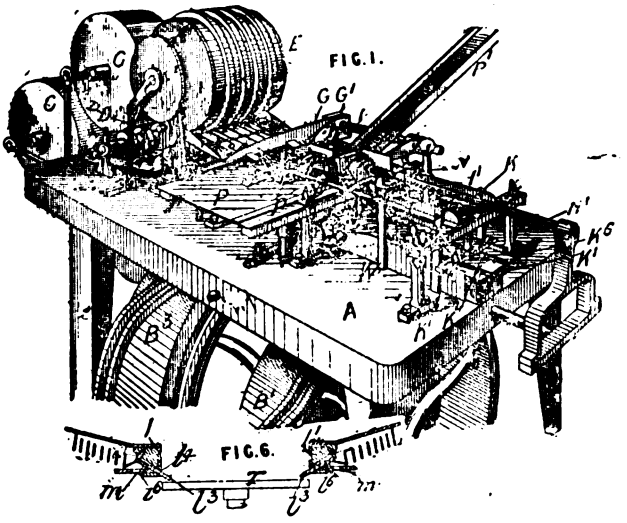

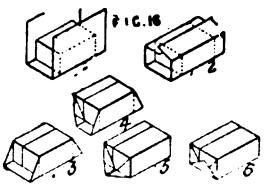

Parcelling confectionery, soap, &c.—Relates to the apparatus described in Specification No. 10,631, A.D. 1887. The two layers of wrapping-material are fed from the reels C by feed-rollers; a large and small feed-roller are used for each layer, the larger one E of the upper pair and the smaller one D of the lower being alone shown. The rollers are worked by ratchet gearing through connecting-rods from a crank on the main shaft. The larger rollers differ in size so that the under layer is fed slightly in advance. The two wrapping-sheets, thus fed forward, are cut off by the shears G, G¹, of which the blade G is stationary. The cut-off wrapper is supported over an aperture *p*, in a table P, by fingers on a swivelling arm. The block of soap, or other article to be wrapped, is fed down the shoot P¹ to spring-actuated retaining-plates *l*³, Fig. 6, which pass through slots *l*⁴ in the adjustable T-iron bars I, I¹. A table T actuated by a mutilated gear-wheel on the main shaft now ascends, and presses back the plates *l*³, liberating the package, the fingers being meanwhile swivelled out of the way. The table T then descends with the package to the level of the table A, two sides of the wrapper being folded in the descent through the aperture *p* as in 1, Fig. 16. The package is now pushed by a bar actuated by the cam-wheel B¹ on the main shaft towards, and through, a shoot, the sides of which are formed by plates K¹ attached to standards K depending from the bars I, I¹, and the top by a spring adjustable plate K², the dimensions of the shoot being thus adjustable. A folder, as in the above-mentioned Specification, now turns down the front top fold 2, Fig. 16, a stationary folder turns down the other top fold, end wing folders turn down the end folds 3, Fig. 16, and side wing folders turn in the front corner flaps 4, Fig. 16. Next, as the package is pushed along, ears on plates K⁶ attached to cross-bars on the plate K² turn in the rear corner folds 5, Fig. 16, and lastly spiral curves on the forward ends of the plates K¹ turn up the bottom end folds and finish the wrapping 6, Fig. 16. The plates *l*³ are returned by plates *m* sliding on the bars I, I¹ and actuated by a cross-bar N through the rod N¹, pins *l*⁶ on the former plates passing through slots in the latter. The folders are adjustable, and those which are not stationary are, with other parts of the machine, operated from the cam-wheel B¹.

18,806. Stuttard, W. Dec. 24.

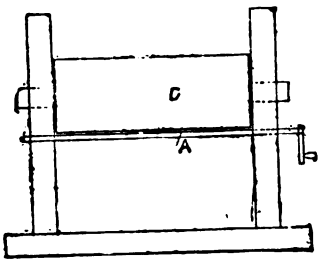

Bundling surgeons' tow &c.—Surgeons' tow and other like material is made into rolls by winding it spirally to and fro on a spindle A and applying pressure by means of a roller C or other means.

18,852. Dymond, G. C., [*Wirth & Co.* acting for *Müller, P. J.*]. Dec. 27.

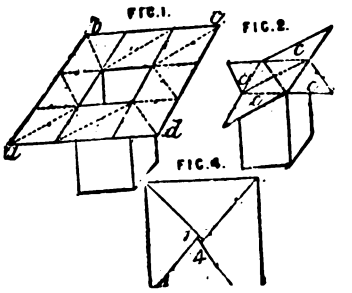

Wrappers.—Relates to wrappers or packets for

Digitized by Google

tea, sugar, bonbons, chocolate, snuff, &c. The packets, which may be made of paper, pulp, stiff linen, or other material, are formed with a projecting rim *a*, *b*, *c*, *d* of the same width as that of the open end. The rim, which is adapted to fold along the dotted lines, is first folded to close the end, as in Fig. 2, leaving the projecting corners *c*. These are then turned in, as in Fig. 4, to complete the closing, the last corner 4 being inserted under 1.

APPENDIX.

The first five of the following abridgments should be added to those appearing in the volume for A.D. 1877–83.

A.D. 1877.

1008. Pitt, S., [*Vulcanized Fibre Co.*]. March 13.

Packing-materials.—Vulcanized fibre is used as a packing-material, and is made by saturating paper, paper pulp, or textile fabric in a bath of concentrated mother liquor resulting from the manufacture of chloride of zinc, tin, &c. Paper sheets thus treated may be united by pressure. By adding certain substances to the bath, or by other means, the material may be made to resemble horn, or it may be made to resemble soft vulcanized rubber &c.

Digitized by Google

A.D. 1878.

2650. Lake, W. R., [*Ritter, E.*]. July 2.

Frames for packing eggs &c.—Three or more cardboard discs are glued together and, while wet, are stamped at intervals with star-shaped sets of incisions, the tongues so formed being bent at right-angles in a machine which also bends the disc rim D. This rim is sometimes previously slit at intervals, in which case it is afterwards glued to a cardboard strip when bent. The whole is dried before leaving the machine. A central I-shaped cut is made in each disc, and the edges are bent and glued to cardboard or wood pieces equal in height to the rim flange. The goods are placed between the tongues of each pair of discs in a paper cask, the top of which is closed by a head, a nut on a central bolt *m* being afterwards tightened. The case is used for eggs, fruit, and the like.

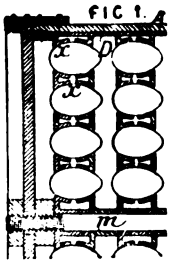

3286. Holt, W. Aug. 20.

Frames for packing bottles.—A light metal frame A supports two or more perforated plates B, C, in which holes are punched to receive the bottles. Lugs G are fixed so that the cases may be safely piled one on top of the other, and a movable bar with a lock may be provided to secure the bottles. The frames may form the divisions in an ordinary wood box.

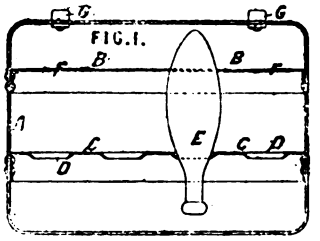

A.D. 1879.

3752. Cochrane, H. Sept. 18.

Frames for packing bottles.—A box, Fig. 1, contains a series of removable frames, Fig. 3, with horizontal divisions so that each bottle occupies a separate compartment. When one layer is filled a light division of wood &c. is placed upon it and another frame is introduced and packed &c. For packing brandy and wine bottles the central division is fixed and contains vertical grooves in which vertical divisions are placed.

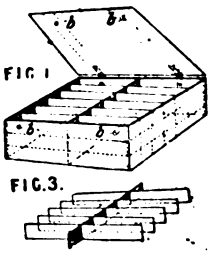

4743. Maxwell, D. A. Nov. 21. [*Letters Patent void for want of final Specification.*]

Frames for packing bottles.—Boxes are partitioned by a number of removable frames, placed one above another, formed of thin wood "halved" and fitted together to form cells for bottles.

Digitized by Google

A.D. 1885.

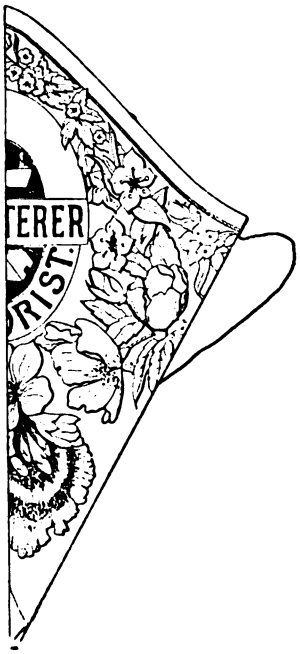

5605. Gibbons, G. May 6.

Paper and like bags for carrying flowers &c. Relates to a flower &c. carrier made of paper, cardboard, wood, &c., and of conical shape, as shown. It is provided with a handle or carrying-tape, and may have a waterproof bottom.

A.D. 1888.

6476. Thompson, W. P., [*Lerch, W*, and *Gelinek, M.*]. May 1.

Wrapping or covering materials.—Cloth for packing purposes is rendered non-porous by coating it with paper pulp direct from the vat. The cloth may be first coated with glue or other binding-medium.

LONDON:
PRINTED FOR HER MAJESTY'S STATIONERY OFFICE,
By DARLING & SON, Ltd., 1, 2, 3 & 5, Great St. Thomas Apostle, E.C.
Published at the PATENT OFFICE, 25, Southampton Buildings,
Chancery Lane, London, W.C.

1897.

Digitized by Google

PATENTS FOR INVENTIONS.

ABRIDGMENTS OF SPECIFICATIONS.

CLASS 95,

PAINTS, COLOURS, AND VARNISHES.

PERIOD—A.D. 1884–88.

LONDON:
PRINTED FOR HER MAJESTY'S STATIONERY OFFICE,
BY DARLING & SON, LTD., 1, 2, 3 & 5, GREAT ST. THOMAS APOSTLE, E.C.
PUBLISHED AT THE PATENT OFFICE, 25, SOUTHAMPTON BUILDINGS,
CHANCERY LANE, LONDON, W.C.

1897.

PRICE ONE SHILLING.

Digitized by Google

Digitized by Google

PATENTS FOR INVENTIONS.

ABRIDGMENTS OF SPECIFICATIONS.

CLASS 95,

PAINTS, COLOURS, AND VARNISHES.

PERIOD—A.D. 1884–88.

LONDON:
PRINTED FOR HER MAJESTY'S STATIONERY OFFICE,
BY DARLING & SON, LTD., 1, 2, 3 & 5, GREAT ST. THOMAS APOSTLE, E.C.
PUBLISHED AT THE PATENT OFFICE, 25, SOUTHAMPTON BUILDINGS,
CHANCERY LANE, LONDON, W.C.

1897.

Digitized by Google

THE NEW YORK
PUBLIC LIBRARY

ASTOR, LENOX AND
TILDEN FOUNDATIONS.
1898.

THE ASTOR LIBRARY
NY

Digitized by Google

EXPLANATORY NOTE.

The contents of this Abridgment Class may be seen from its Subject-matter Index. For further information as to the classification of the subject-matter of inventions, reference should be made to the *Abridgment-Class and Index Key*, published at the Patent Office, 25, Southampton Buildings, Chancery Lane, W.C., price One Shilling, postage (parcel post) Sixpence.

It should be borne in mind that the abridgments are merely intended to serve as guides to the Specifications, which must themselves be consulted for the details of any particular invention. Printed Specifications, price Eightpence, may be purchased at the Patent Office, or ordered by post on the Patents Form C[1] (to be obtained from any Post Office), no additional charge being made for postage.

SUBJECT-MATTER INDEX.

Abridgments are printed in the chronological order of the Specifications to which they refer, and this index quotes only the year and number of each Specification.

Air brushes and pencils. *See* Painting &c.

Anticorrosive and antifouling paints and compositions. *See* Paints and compositions, Antifouling.

Balsams. *See* Resins &c.

Bathbricks. *See* Paints, colours, &c.

Body colours. *See* Paints, colours, &c.

Brushes, Air. *See* Painting &c.

Cans, Paint. *See* Paint and like cans.

Coating surfaces, Compositions for. '*84*. 7145. 15,857. '*86*. 3572. 5413. 8442. '*87*. 15,231.
Excepting Boot blacking and polishing preparations, [*Abridgment Class* Boots &c.] ; Cements for general building purposes, [*Abridgment Class* Cements &c.] ; Confectionery &c., [*Abridgment Class* Cooking &c.] ; Coverings and compositions, Non-conductors of heat, [*Abridgment Class* Heating] ; Fireproof coverings and compositions, [*Abridgment Class* Cements &c.] ; Japans ; Lacquers ; Ornamenting surfaces of metal &c., (*compositions for*), [*Abridgment Class* Ornamenting] ; Paints and compositions, Antifouling; Paints, colours, and pigments ; Plastic compositions, [*Abridgment Class* India-rubber &c.] ; Preservative compositions ; Varnishes ; Waterproofing - compositions, [*Abridgment Class* Waterproof &c. fabrics] ;
for which see those headings.
fabrics coated with liquid or plastic materials. *See Abridgment Class* Waterpooof &c. fabrics.

Coating surfaces with liquids and plastic materials. '*84*. 7145. 15,857. '*85*. 424. 9937. '*86*. 3572. 4965. '*87*. 4954. 5342 6398. 15,231. '*88*. 13,012. 14,040.

Digitized by Google

Coating surfaces with liquids &c.—*cont.*
Special coating processes are indexed under special headings, such as Bronzing &c., [*Abridgment Class* Printing other than letterpress &c.]; Copying documents &c., [*Abridgment Class* Printing, Letterpress &c.]; Dyeing, [*Abridgment Class* Bleaching &c.]; Electrolysis, [*Abridgment Class* Electrolysis]; Enamelling, [*Abridgment Class* Moulding &c.]; Fabrics coated with liquid or plastic materials, [*Abridgment Class* Waterproof &c. fabrics]; Gilding and silvering, [*Abridgment Class* Ornamenting]; Glueing, [*Abridgment Class* Wood &c.]; Gumming, pasting, and the like, [*Abridgment Class* Cutting &c.]; Japanning; Lacquering; Metals, Coating, [*Abridgment Class* Metals and alloys]; Ornamenting, [*Abridgment Class* Ornamenting]; Painting and varnishing; Paper, Treating after manufacture, [*Abridgment Class* Cutting &c.]; Photography, [*Abridgment Class* Photography]; Polishing, French and like; Tinning &c., [*Abridgment Class* Metals and alloys]; Waterproofing, [*Abridgment Class* Waterproof &c. fabrics].

Colouring-matters or paints. *See* Paints, colours, and pigments.

Colouring or painting. *See* Painting &c.

Colours. *See* Paints, colours, &c.

Corrosion, Preventing. *See* Paints and compositions, Antifouling.

Crayon paints. *See* Paints, colours, &c.

Distempering. *See* Painting &c.

Distempers. *See* Paints, colours, &c.

Driers. *See* Paints, colours, &c.

Dyes. *See Abridgment Class* Acids and salts, Organic, &c.

Enamels or paints. *See* Paints, colours, &c.

Enamels or varnishes. *See* Varnishes.

Filling for painters' use. *See* Painting &c.

Fireproof paints. *See* Paints, colours, &c.

French-polishing. *See* Polishing, French &c.

Furniture polishes. *See* Polishing-liquids.

Graining. *See* Painting &c.

Gum-resins. *See* Resins &c.

Japanning. '85. 12,257. '87. 4954. '88. 16,180.
stoves for. *See Abridgment Class* Stoves &c.
thermostats for use in. *See Abridgment Class* Heating.

Japans. '87. 2201. '88. 10,292.

Kinos. *See* Resins &c.

Lacquering. '87. 2558. 4954. 5586. '88. 3008.
thermostats for use in. *See Abridgment Class* Heating.

Lacquers. '85. 12,568. '86. 9027. '87. 5586. 6870. 7376. 8253. '88. 3008. 16,035.

Lacs. *See* Resins &c.

Luminous paints. *See* Paints, colours, &c.

Marking-compositions. *See* Paints, colours, &c.

Metallizing or French-polishing surfaces. *See* Polishing, French &c.

Oleo-resins. *See* Resins &c.

Ovens, Japanning. *See* Japanning.

Paint and like cans. '84. 8712. '85. 5798. 8739. 9251. '86. 16,761. '87. 1981. 3075. 13,203. '88. 4279. 5478. 6012.
cans for storing. *See Abridgment Class* Hollow-ware.

Painted surfaces, Cleansing-compositions for. *See Abridgment Class* Oils &c.

Painting and varnishing, [*including* Staining]. '84. 267. 578. 1915. 2474. 3103. 3279. 4803. 6885. 7130. 7145. 7190. 7281. 9925. 13,280. 13,425. 13,442. 14,193. 14,316. 16,889. '85. 791. 3576. 4764. 9411. 9412. 11,229. '86. 78. 1086. 4225. 8446. 9489. 14,899. 16,522. '87. 2080. 2558. 5586. 6398. 7243. 8786. 9536. 10,746. 11,664. 15,231. '88. 720. 2478. 3008. 4279. 8435. 9044. 12,892. 16,502. 17,799.
brushes. *See Abridgment Class* Brushing &c.
ladders for. *See Abridgment Class* Buildings &c.
printing fabrics. *See Abridgment Class* Printing other than letterpress &c.
putty. *See Abridgment Class* Starch &c.
scaffolding and staging for. *See Abridgment Class* Buildings &c.
stencil plates. *See Abridgment Class* Printing other than letterpress &c.
stereochromatic painting. *See Abridgment Class* Artists' instruments &c.
transfers. *See Abridgment Class* Printing other than letterpress &c.

Paint pots. *See* Paint and like cans.

Paints and compositions, Antifouling. '84. 267. 340. 3536. 4348. 4796. 5996. 6490. 10,457. 12,653. 13,867. 14,776. '85. 312. 1604. 2014. 4415. 7121. 7498. 10,409. 11,529. 11,543. 13,159. 13,396. 15,231. '86. 3636. 7497. 12,499. 15,561. '87. 1569. 2457. 2498. 6755. '88. 683. 1101. 3752. 6012. 7033. 10,192. 10,292. 10,601. 11,209. 11,554. 15,564. 15,971. 17,946.
grinding, crushing, and the like. *See Abridgment Class* Grinding, crushing, &c.

Digitized by Google

Paints &c., Antifouling—*cont.*
incrustation and corrosion, preventing in steam generators or the like. *See Abridgment Class* Steam generators.
lead salts for use as. *See Abridgment Class* Acids, alkalies, &c.
mixing and agitating. *See Abridgment Class* Mixing &c.
tar for. *See Abridgment Class* Gas manufacture.

Paints and varnishes, Removing. '*84.* 8179. 12,144. '*85.* 9280. 11,428. 15,195. '*86.* 4737. 4856. 10,960. '*87.* 4023. 11,376. '*88.* 10,301. 10,365. 11,398.

Paints, colours, and pigments;
Excepting Paints and compositions, Antifouling; *for which see that heading.*
bathbricks. *See* hearthstones &c. *below.*
boxes and cases for. *See Abridgment Class* Boxes &c.
cakes, blocks, and sticks. '*86.* 9176. 12,203. '*87.* 3124.
cans for storing. *See Abridgment Class* Hollow-ware.
cans, painters'. *See* Paint and like cans.
carbon for, manufacture of. *See Abridgment Class* Non-metallic elements.
casks for. *See Abridgment Class* Casks &c.
changing colour when damp. '*87.* 6730.
changing colour when heated. '*86.* 5598.
colour boxes, artists'. *See Abridgment Class* Artists' instruments &c.
colour pans, artists'. *See Abridgment Class* Artists' instruments &c.
colours. *See* pigments *below.*
crayon paints. *See* cakes &c. *above.*
damp-proof. *See* waterproof *below.*
deodorizing. '*88.* 5878.
displaying for sale or inspection. *See Abridgment Class* Advertising &c.
distempers. '*84.* 7255. '*87.* 8031. '*88.* 678.
drying in manufacture. *See Abridgment Classes* Centrifugal drying &c.; Drying.
enamels or varnishes. *See* Varnishes.
fireproof. '*84.* 9803. 11,660. '*85.* 15,948. '*86.* 3663. '*87.* 7809. 14,543. '*88.* 3752. 3795. 10,292. 15,997.
furnaces for manufacture of. *See Abridgment Class* Furnaces &c.
grinding, crushing, pulverizing, and the like. *See Abridgment Class* Grinding, crushing, &c.
hearthstones and the like. '*88.* 6888.
luminous. '*84.* 14,661. '*88.* 14,728.
marking-compositions. *See* materials &c. *below.*
materials and compositions. '*84.* 2539. 2841. 2896. 4348. 4796. 5192. 5237. 5972. 7145. 7448. 8783. 9105. 9803. 9888. 10,100. 10,624. 11,660. 11,930. 13,425. 13,442. 13,492. 13,867. 14,661. '*85.* 491. 1604. 3576. 4127. 6844. 8008. 8737. 9249. 9413. 9414. 9614. 10,409. 10,838. 12,568. 12,723. 13,891. 14,128. 15,948. '*86.* 1086. 1511. 2310. 2439. 2878. 3663. 4522. 4625. 4737. 4750. 5598. 6413. 8442. 9581. 9992. 10,298. 10,482. 11,493. 11,889. 12,203. 13,416. 13,799. 15,363. '*87.* 120. 955. 1033. 1569. 2201. 3124. 3280. 4278. 4334. 4579. 4648. 6582. 6619. 6730. 7278. 7524. 7809. 8031. 8816. 9887. 10,926. 11,805. 12,031. 12,632. 13,885. 14,011. 14,543. 15,381. 17,386. 17,925. '*88.* 607. 667. 678. 720. 3752. 3795. 5399. 5878. 6471. 7607. 7708. 10,292. 10,757. 12,795. 14,107. 14,728. 15,997. 16,502.
media. *See* vehicles *below.*
mixing and agitating. *See Abridgment Class* Mixing &c.
moulding. *See Abridgment Class* Moulding &c.
oil mixtures or vehicles. *See* vehicles *below.*
oils for mixing, preparing. *See Abridgment Class* Oils &c.
pigments. '*84.* 5192. 5972. 7448. 8783. 9888. 10,100. 11,930. 13,492. 13,867. '*85.* 4127. 6844. 8008. 9249. 9414. 10,838. 12,723. 13,891. 15,948. '*86.* 2310. 4522. 4750. 6413. 9176. 9581. 10,298. 11,889. 12,203. 13,416. 13,799. 15,363. '*87.* 955. 1033. 1569. 3124. 3280. 4334. 4579. 4648. 6582. 6619. 7278. 8816. 9887. '*88.* 7607. 14,107.
Pigments or salts of distinct chemical characters are indexed under headings for salts, such as Iron oxides &c., [*Abridgment Class* Acids, alkalies, &c.]; Lead salts, [*Abridgment Class* Acids, alkalies, &c.]; White lead, [*Abridgment Class* Acids, alkalies, &c.]; Zinc salts, [*Abridgment Class* Acids, alkalies, &c.]; &c.
processes for making. '*84.* 5192. 5972. 7448. 8783. 9888. 10,100. 11,930. 13,425. 13,492. '*85.* 4127. 9414. 12,723. '*86.* 2310. 2878. 4750. 5598. 6413. 9176. 10,298. 11,889. 15,363. '*87.* 955. 3280. 4334. 9887. '*88.* 7607.
resins for. *See* Resins &c.
separating or sorting materials for. *See Abridgment Class* Sifting &c.
sifting materials for. *See Abridgment Class* Sifting &c.
tablets. *See* cakes &c. *above.*
tar for. *See Abridgment Class* Gas manufacture.
tar oils for use as. *See Abridgment Class* Oils &c.
ultramarine. *See* pigments *above.*
vehicles. '*84.* 579. 2539. 2841. 5237. 13,425. 13,442. '*85.* 3576. 9413. 10,808. 12,568. 13,156. '*86.* 2878. 8442. 10,482. 11,493. '*87.* 120. 6582. 10,926. 11,805. 12,031. 14,011. '*88.* 607. 720. 3795. 7607. 7708. 12,795.
washes. '*84.* 7255. '*86.* 4625. 4737. '*87.* 4278. 8031. '*88.* 678. 10,292.
waterproof. '*84.* 2896. 4348. 5237. 9105. 9803. 10,100. 13,867. 14,661. '*85.* 1604. '*87.* 12,632. '*88.* 3752. 10,292. 15,997.
whitewash. *See* washes *above.*

Pastels. *See* Paints, colours, &c.

Pasteurizing. *See* Preserving.

Pigment distributers. *See* Painting &c.

Pigments. *See* Paints, colours, &c.

Polishing, French and like. '*84.* 5002. 11,660. 14,316. 15,978. '*85.* 2248. '*86.* 14,046. '*87.* 383. 4578. 12,052.

Digitized by Google

Polishing, French and like—*cont.*
polishing-liquids. *See* Polishing-liquids.
polishing pastes and powders. *See Abridgment Class* Grinding or abrading &c.

Polishing-liquids. '*84.* 379. 542. 16,106. '*85.* 561. '*86.* 5413. 12,413. 14,046. '*87.* 4578. 14,245. '*88.* 6336. 17,554.
Excepting Boot blacking and polishing preparations, [*Abridgment Class* Boots &c.]; *for which see that heading.*

Preservative compositions. '*84.* 267. 1075. 5237. 5317. 5565. 7145. 8332. 9105. 11,660. 12,280. 13,425. 13,548. 14,776. '*85.* 884. 1232. 1604. 1973. 2615. 3894. 5359. 6509. 7223. 7498. 9419. 10,409. 11,529. 11,543. 12,568. 13,328. '*86.* 2616. 3572. 3663. 7777. 7903. 8442. 10,828. 15,011. 16,935. '*87.* 11. 1199. 2457. 2498. 4583. 5532. 6571. 6582. 7884. 9579. 10,656. 10,898. 10,926. 11,689. 12,534. 15,231. 15,382. 17,814. '*88.* 667. 3752. 5577. 6012. 6336. 6478. 7458. 9570. 10,192. 10,292. 12,774. 12,964. 13,721. 14,854. 15,971.
Excepting Asphalts, [*Abridgment Class* Cements &c.]; Disinfectants, deodorants, fumigants, and antiseptics, [*Abridgment Class* Medicine &c.]; Enamels, Pottery &c., [*Abridgment Class* Moulding &c.]; Fireproof coverings and compositions, [*Abridgment Class* Cements &c.]; Food, Preserving, (*compositions for*), [*Abridgment Class* Food &c.]; Incrustation and corrosion, Preventing and removing in steam generators, water-heating pipes, and the like, [*Abridgment Class* Steam generators]; Japans; Lacquers; Paints and compositions, Antifouling; Paints, colours, and pigments; Varnishes; Waterproofing - compositions, [*Abridgment Class* Waterproof &c. fabrics]; *for which see those headings.*
cans for applying. *See* Paint and like cans.
cans for storing. *See Abridgment Class* Hollow-ware.
carbon and charcoal for making. *See Abridgment Class* Non-metallic elements.
tar oils for use as. *See Abridgment Class* Oils &c.

Preserving:
Preserving special substances or articles and special preservative processes are indexed under special headings, such as Beverages, [*Abridgment Class* Beverages]; Blacklead, [*Abridgment Class* Stoves &c.]; Bottles, jars, &c., [*Abridgment Class* Stoppering &c.]; Corpses and bodies, Treatment &c. of, [*Abridgment Class* Medicine &c.]; Disinfecting &c., [*Abridgment Class* Medicine &c.]; Electric conductors, Manufacture of, [*Abridgment Class* Electricity, Conducting &c.]; Ensilage, [*Abridgment Class* Agricultural appliances, Farmyard &c.]; Fabrics, Finishing &c., [*Abridgment Class* Fabrics, Dressing &c.]; Fabrics, Folding &c., [*Abridgment Class* Fabrics, Dressing &c.]; Fats &c., [*Abridgment Class* Oils &c.]; Food, Preserving, [*Abridgment Class* Food &c.]; Glucose &c., [*Abridgment Class* Sugar]; Hose and other flexible pipes, [*Abridgment Class* Pipes &c.];

Preserving—*cont.*
Preserving special substances &c.—*cont.*
India-rubber &c., [*Abridgment Class* India-rubber &c.]; Jam &c., [*Abridgment Class* Food &c.]; Laces, [*Abridgment Class* Lace-making &c.]; Leather, Manufacture of, [*Abridgment Class* Leather]; Maltose, [*Abridgment Class* Sugar]; Medicines &c., [*Abridgment Class* Medicine &c.]; Natural-history specimens, Preserving, [*Abridgment Class* Advertising &c.]; Paper and paper-making, [*Abridgment Class* Paper &c.]; Preservative compositions; Ropes &c., [*Abridgment Class Class* Ropes &c.]; Stone, Preserving, [*Abridgment Class* Cements &c.]; Tannin, [*Abridgment Class* Acids and salts, Organic, &c.]; Waterproofing, [*Abridgment Class* Waterproof &c. fabrics]; Wood, Treating for preserving &c., [*Abridgment Class* India-rubber &c.].
antiseptic and aseptic paper for. '*88.* 7854.
fibrous and cellular materials. '*84.* 5317. '*85.* 6509. '*86.* 7927.
in special vessels. '*83.* 1809, [*Appendix, page* 52]. '*84.* 3119, [*Appendix, page* 52]. 14,278.
liquids. '*83.* 1809, [*Appendix, page* 52]. '*84.* 3119, [*Appendix, page* 52]. '*85.* 6509.
methods. '*84.* 5317. '*85.* 6509. '*86.* 7927. '*87.* 17,814. '*88.* 12,774.

Priming-paints. *See* Paints, colours, &c.

Printing-colours. *See* Paints, colours, &c.

Protective or preservative compositions. *See* Preservative compositions.

Resins and resinous compounds. '*84.* 2630. 8036. 9509. 12,806. 12,807. '*85.* 39. 11,177. '*86.* 2878. 5270. 9027. '*87.* 1057. 8816. 11,805. 15,772. '*88.* 245. 18,716.
boxes and cases for. *See Abridgment Class* Boxes &c.
cauldrons for heating. *See Abridgment Class* Cements &c.
distillation, destructive. *See Abridgment Class* Gas manufacture.
emulsifying. *See Abridgment Class* Medicine &c.
grinding, crushing, pulverizing, and the like. *See Abridgment Class* Grinding or abrading &c.
moulding. *See Abridgment Class* Moulding &c.
sifting and screening. *See Abridgment Class* Sifting &c.
solvents for. *See Abridgment Class* Oils &c.

Rosin. *See* Resins &c.

Rust-preventing compositions. *See* Preservative compositions.

Shellac. *See* Resins &c.

Sizing or painting. *See* Painting &c.

Staining. *See* Painting &c.

Stains, Wood and like. '*84.* 578. 14,468. '*87.* 3280. 8816. 17,386.

Ultramarine. *See* Paints, colours, &c.

Digitized by Google

Varnishes. '*84*. 578. 2630. 2896. 5237. 6051. 9105. 9803. 12,806. 12,807. 13,548. 15,121. 15,857. 15,978. '*85*. 491. 5359. 5993. 6243. 9413. 10,409. '*86*. 606. 1511. 2439. 2878. 3663. 5270. 7777. 7903. 8442. 9027. 12,741. 15,685. '*87*. 11. 2201. 2498. 2694. 3794. 3987. 4360. 5586. 5791. 6323. 6870. 7376. 7377. 8253. 8594. 10,420. 11,805. 13,885. 15,381. 15,771. 17,925. '*88*. 487. 607. 3463. 5878. 6336. 7929. 10,292. 10,379. 12,827. 13,007. 16,035.

Excepting Boot blacking and polishing preparations, [*Abridgment Class* Boots &c.]; Japans; Lacquers; Paints and compositions, Antifouling;

for which see those headings.

cans for. *See* Paint and like cans.

cans for storing. *See Abridgment Class* Hollow-ware.

leather-dressing compositions. *See Abridgment Class* Leather.

Varnishes—*cont.*

mixing and agitating. *See Abridgment Class* Mixing &c.

oils for. *See Abridgment Class* Oils &c.

Varnishes, Removing. *See* Paints and varnishes, Removing.

Varnishing. *See* Painting &c.

Vehicles for paints. *See* Paints, colours, &c.

Washes. *See* Paints, colours, &c.

Washing or painting. *See* Painting &c.

Waterproof paints. *See* Paints, colours, &c.

Whitewash. *See* Paints, colours, &c.

Whitewashing. *See* Painting &c.

Digitized by Google

NAME INDEX.

The names in *italics* are those of persons by whom inventions have been communicated to the applicants for Letters Patent.

Abel, C. D. ..... '84. 13,425
Air Brush Manufacturing Co. '84. 7281
Allen Machine Co..... '87. 9536
Allen, A. H..... '87. 11,689
„ J. J..... '87. 9536
'88. 13,012
Allison, H. J. '87. 3124. 12,031
13,203
Andrews, A..... '85. 11,529
'88. 12,827
„ G. J. ..... '84. 5996
Angus, R..... '87. 11,689
Archer, J. A..... '85. 5993
Astfalck, C..... '86. 12,203
Audouard, L. P...... '86. 7927

Badische Anilin & Soda Fabrik. '86. 6413
Baird, J..... '87. 4578
Banker, G. W...... '87. 12,031
Banner, S. ..... '87. 11,805
Bardtholdt, J..... '87. 6730
Barkley, W..... '88. 7929
Barnard, W. H. ..... '84. 14,278
Baynes, J. ..... '88. 15,564
Beardsley, M. W. ..... '85. 1604
Behrens, E. A...... '85. 11,177
Belfast Paint and Colour Manufacturing Co. ..... '88. 5878
Bender, E. ..... '88. 16,502
Benedictus, M..... '86. 10,960
Bergh, A. T. ..... '84. 2896
Bergmann, F. W. .... '88. 16,180
Best, T. F. ..... '84. 15,121
Biggs, R. H. W..... '87. 4583
Bigsby, J. A. ..... '87. 3987
Bindley, W. A. ..... '85. 12,257
Binns, F. J..... '88. 17,946
Blane, Sir S. J. ..... '84. 9803
Blenkinsop, J..... '85. 15,231
Boham, A. F. ..... '85. 12,257
Bolas, T. ..... '84. 10,624
Bond, S. ..... '84. 13,867
Bosshardt, F..... '85. 6844
Bouillet, L. J. B. A. J. ..... '86. 9176
Boult, A. J..... '84. 13,867
'87. 10,656. '88. 15,997
„ W. C. ..... '86. 12,413
Bowbeer, J. R. ..... '86. 3636
Bowring, M. ..... '88. 6888
Bracher, P. H. ..... '88. 7458
Bradley, A. J. ..... '84. 379
Brélaz, G. L. ..... '84. 9509
Brentini, P..... '88. 11,398
Briggs, W. ..... '86. 7777
Britten, H. ..... '84. 16,889
Brown, L...... '84. 11,660
'85. 12,568
Brydson, J..... '84. 9105
Bunn, P. C..... '85. 8008
Burdick, C. L...... '88. 8435
Burdock, W. H..... '86. 4856
Burton, F. G. ..... '87. 11,376
„ H. J..... '87. 6398

Cameron, J. ..... '86. 7497
Candy, F..... '85. 15,948
Carr, G. W..... '85. 11,543
Carter, W. ..... '86. 15,561
Caspar, A. M. F..... '84. 13,442
Chadwick & Son, R.... '87. 3280
Chadwick, J. W. Consterdine- '87. 3280
„ R..... '87. 3280
Challoner, S. '87. 11. '88. 16,035
Charleson, W. ..... '84. 13,548
Chemische Fabriks Actiengesellschaft. ..... '85. 9614
Chiapponi, M..... '85. 12,723
Choate, S. F. van..... '88. 12,774
Church, M. B...... '87. 15,231
Clark, A. M. ..... '84. 8036
'86. 2878. 7927. '87. 2694
Clift, S. ..... '84. 7130
Cohen, A. M..... '84. 3103
Coldwell, E..... '85. 15,195
Coleman, T. S. ..... '87. 11,376
Collin, C...... '87. 17,925
Compton, E. ..... '85. 11,428
Condon, M..... '86. 15,685
Coninck, F. de. ..... '88. 3795
Connor, J. ..... '84. 11,930
Consterdine-Chadwick, J. W. '87. 3280
Cooper, F. ..... '85. 4127
Corbould, W..... '87. 4278
Cotterell, R..... '84. 15,978
Crane, F..... '87. 4954. 5586 5791. 7376. 7377. 8253 15,771. 15,772.
Crawford, J. ..... '86. 9489
Crookes, H. ..... '86. 5598
Crowther, G. H..... '85. 5798
Cunliffe, H..... '86. 15,685
„ W. ..... '87. 8594

Danby, J..... '88. 15,971
Danchell, F. H..... '86. 2439
Daniels, G..... '84. 6885
Davison, A. J..... '88. 11,209
Day, W. ..... '84. 267
Denham, S..... '87. 12,052
„ W. ..... '87. 12,052
Denniston, P..... '85. 4415
Dick, W..... '87. 2498
Dickinson, J. ..... '85. 11,543
Dillies et Cie..... '84. 5317
Donovan, R. E..... '87. 2201
Dormitzer, A. ..... '87. 13,203
Doughty, W. H..... '88. 15,564
Dove, E. J. ..... '88. 6012
Downs, S. ..... '88. 17,799
Dratz, C..... '88. 9044
„ H. ..... '88. 9044
Ducker, W. M. ..... '87. 7884 12,534
Duncan, D. J. R. .... '86. 15,011
Dunlop, R..... '83. 1809, [*Appendix, page* 52]. '84 3119, [*Appendix, page* 52]
Dupret, J. B...... '85. 5359

Digitized by Google

Eastman, J. H. ....'88. 10,192
Edwards, A. ....'87. 2558
„ E. ....'87. 5532
„ R. J. ....'87. 2558
Eichler, C. H. ....'88. 15,997
Errani, L. ....'87. 17,925
Escalonne, C. E. d' (Veuve) *née* Le Revert. ....'87. 17,814

Feaver, F. W. ....'85. 8739
„ J. ....'85. 8739
Fell, A. H. ....'84. 13 280
„ A. W. ....'84. 13,280
„ R. ....'84. 3103
Field, W. D. ....'87. 7376. 8253 15,771. 15,772
Fischbach, J. H. ....'88. 12,892
Fischer, O. ....'84. 2539
Fisher, T. ....'88. 5878
Folger, W. D. ....'84. 4348
Ford, A. ....'85. 5993
„ H. J. T. ....'85. 2014
Forquignon, L. ....'84. 7190
Forrest, J. ....'87. 14,245
„ R. W. ....'87. 7278
„ W. ....'87. 7278
Freeman, J. B. ....'85. 13,891
French, A. ....'84. 7448. 13,492
Furnival, T. ....'84. 6885

Gard, W. G. ....'86. 13,799
Gardner, H. ....'84. 15,857 '85. 10,409
Gare, T. ...'84. 5237. '86. 14,899
Garton, T. ...'87. 3794. '88. 7929
Gehring, G. ....'84. 13,425
Gell, W. J. ....'85. 12,257
Gérard, M. P. E. ....'87. 2694
Germot, A. ....'84. 2630
Gintl, W. ....'85. 6243
Gisborne, J. S. ....'85. 312
Goggs, L. H. ....'88. 7708
Gould, R. ....'87. 8031
Graf, H. ....'85. 6844
Gray, R. R. ....'86. 16,761
Greaves, H. T. ....'88. 15,564
„ W. ....'84. 14,193
Green, W. ....'87. 10,420
Greening, F. ....'86. 8442
Greenwood, W. ....'88. 17,799
Grellmann, C. O. G. ...'86. 16,522
Grossich, A. .. ....'88. 7854
Groth, L. A. ....'87. 17,925
Gullick, T. J. ....'85. 3576
Gunn, H. H. ....'87. 955

Haddan, H. J. ....'84. 4348 '86. 2616
Hale, J. ....'87. 5586. 5791. 7376 7377
„ *R.* ...'87. 5586. 5791. 7376 7377
Hall, J. W. ....'86. 4750 '88. 14,107
Hamilton, J. W. ....'87. 6571
Hammond, C. ....'84. 14,468
Hanlon, P. ....'88. 6336
Hannay, J. B. ....'84. 13,492 '86. 9581. 12,499. 13,416 '88. 7033
Hardcastle, T. ....'87. 4579
Haret, C. ....'86. 3663
Harrach, M. A. ....'88. 17,554
Harrison, A. H. ....'88. 5478
„ G. ....'87. 7809
„ T. ....'85. 9419
„ T. B. ....'86. 4625
Harrop, C. ....'88. 3008
Hart, W. E. ....'85. 2615
„ W. F. ....'87. 17,386
Harvey, H. A. ....'87. 6755
Hautrive, J. ....'84. 8332
Hayward, F. W. ....'87. 9579
Helliwell, T. W. ....'88. 9570
Henderson, A. L. ....'85. 424
Herman, D. ....'87. 14,011
Heslop, M. ....'85. 2248
Heywood, J. ....'84. 3279
Hicken, W. ....'84. 8179
Himly, M. ....'87. 6730
Hinksman, C. ....'84. 12,144
Hipwell, E. ....'88. 13,007
Hirons, C. F. ....'84. 2841
Hodgson, J. ....'88. 14,728
Hofmann, B. B. ....'88. 13,007
Holzapfel, W. C. A. ....'88. 683
Hooper, S. R. ....'85. 39
Howell, J. A. ....'87. 1981
Höxter, A. ....'84. 15,857
Hunt, R. ....'87. 1057
Huntington, T. C. ....'85. 12,723

Imray, J. ....'84. 1915. 12,806 12,807
„ O. ....'85. 11,177 '88. 3752
Ireland, A. C. ....'86. 3636
Irvine, T. T. ....'88. 7708

Jackson, E. ....'85. 13,396
„ J. H. ....'88. 10,379
Jaçobs, A. Müller- ....'86. 2878
Jeger, J. ....'87. 5532
Jeyes, O. ....'87. 2457
Johnson, J. H. ....'84. 7145 '85. 1973. '86. 6413
Justice, P. M. ....'85. 7223 '87. 15,231

Keene, S. D. ....'87. 4360
Keirby, E. ....'87. 10,898
Kelsey, J. R. ....'88. 3463
Kenyon, T. ....'87. 4334
Kerr, M. ....'84. 16,106
Kiessling, N. ....'86. 10,482
Kingzett, C. T. ....'85. 3894
Kissel, A. K. ....'84. 8036
Kitchingman, E. L. ...'85. 11,529
Knemeyer, L. G. ....'87. 7243
Knight, H. ....'84. 5972
Konrad, F. ....'85. 1232
Kuess, V. J. ....'88. 7607

Laboré, C. ....'85. 884
Lake, H. H. ....'84. 11,660 '85. 6509. 7498. '87. 6870 7524. '88. 12,774.
„ W. R. ....'85. 5359. 8737 12,568. '86. 10,828
Langford, W. ....'88. 10,292
Larrabee, C. S. ....'87. 17,386
Layden, P. ....'84. 4796
Lee, G. S. ....'88. 3752
Lehmann, R. ....'87. 6323
Leiser, F. ....'87. 6730
Le Revert, C. E. d'Escalonne (Veuve) *née*. '87. 17,814
Leroux, C. J. ....'88. 12,892
Lewis, G. T. ....'86. 4750 '88. 14,107
Liebhaber, G. J. C. M. Baron de. '86. 4737
„ L. E. A. E. D. de. '84. 9888
Linzell, J. J. ....'87. 2080
Lublinski, D. ....'85. 10,409
Lyman, J. C. ....'87. 12,632
Lyman, J. H. ....'87. 12,632
Lyon, R. B. ....'88. 6888
Lysaght, J. ....'85. 4764
Lyte, F. M. ...'84. 3536. 12,653 '86. 10,298. 11,889

MacArthur, J. S. ....'87. 7278
McClave, E. W. ....'86. 1511
McIntyre, B. F. ....'88. 14,854
Mackay, M. ....'88. 667
McKenny, J. ....'87. 2201
Mackirdy, G. de M. ...'87. 8816
McLea, K. ....'87. 15,381. 15,382
McLean, A. ....'86. 11,493
„ W. ....'84. 4796
McQueen, J. ....'84. 8712
Macrone, W. ....'85. 9411. 9412 9413. 9414
Martin, J. C. ....'84. 5192 '87. 6619
Matcovich, P. ....'88. 7854
Melville, D. ....'85. 7121
Melvin, J. B. ....'86. 5270
Mewburn, J. C. ....'85. 6243
Mills, B. J. B. ....'85. 884
Molyneux, P. ...'87. 6582. 10,926 '88. 6471
Morawetz, G. ....'88. 4279
Morfit, C. ....'88. 18,716

Digitized by Google

Morley, S. ..... '84. 4803
Moro, S. ..... '88. 6478
Mourlot, E. ..... '86. 7903
Müller-Jacobs, A. ..... '86. 2878
Munier, F. ..... '87. 11,664
Murchison, R. I. ..... '88. 12,964
Myers, H. S. ..... '87. 3124
Mylne, H. C. ..... '86. 15,011

Nangle, W. C. ..... '88. 13,721
Newby, E. H. ..... '84. 10,100
Nicoll, D. ..... '87. 1199
Nipper, J. ..... '88. 678
Noback, G. ..... '85. 6243
Notz, J. F. ..... '85. 1232

Oates, E. ..... '88. 10,301. 10,365
Oliver, T. U. ..... '86. 8446
Orlay, C. ..... '86. 10,828
Orr, A. ..... '88. 487

Palmer, E. J. ..... '86. 4965
Pape, E. J. ..... '86. 9581
Paris, R. J. ..... '88. 17,946
Parkes, A. ... '84. 12,280. 14,776
Pass, E. de. ..... '86. 16,935
Pearce, E. J. ..... '84. 340
„ T. J. ..... '85. 1604
Pedley, G. J. ..... '85. 9937
Perkins, J. P. ..... '85. 8737
'87. 7524
Pickering, J. ..... '84. 10,457
Pictet, R. P. ..... '84. 9509
Pitt, S. ..... '84. 9509. '86. 3663
Pointon, J. ..... '85. 13,159
Pond, J. A. ..... '86. 3572
Pont, A. de. ..... '87. 383
Punshon, R. '87. 15,381. 15,382

Quarante, P. L. ..... '87. 17,814

Rave, C. ..... '88. 607
Rave, C. ..... '88. 5577
Read, A. ..... '87. 3075
Reddie, A. W. L. ..... '84. 5317
Rees, C. W. ..... '84. 5002
Rickards, H. ..... '85. 791
Ripberger, G. ..... '85. 1973
Rivière, L. ..... '84. 2630
Roebuck, S. ..... '85. 7498
Roese, E. ..... '86. 5413
Rosenfeld, S. ..... '87. 10,656
Rousset, C. F. ..... '86. 606
Russell, E. A. ..... '84. 542
Russell, J. B. ..... '88. 14,040
Rust, J. ..... '87. 9887
Ryan, F. J. ..... '86. 12,413
Ryles, A. E. ..... '86. 4225
Ryrie, A. ..... '84. 6490

Saale, H. E. A. ..... '84. 10,457
Salvaire, N. ..... '87. 11,664
Sandron, A. ..... '85. 6509. 7223
Schaal, E. ... '84. 12,806. 12,807
Schaal, E. ..... '86. 9027
Schnitger, K. C. ..... '88. 720
Schutter, G. ..... '84. 15,857
Semal, A. ..... '84. 7145
Sharpe, G. ..... '88. 12,964
Shepherd, A. ..... '84. 2474
Simpson, H. J. ..... '87. 8816
Smith, G. J. ..... '86. 12,741
„ P. ..... '85. 11,229
„ R. ..... '86. 11,493
„ T. ..... '85. 13,328
Snell, S. ..... '84. 8179
Snyder, F. H. ..... '87. 1569
Soc. Industrielle et Commerciale des Metaux. ..... '86. 16,935
Sommer, A. ..... '88. 12,795
Spence, J. B. ..... '85. 14,128
Squire, W. S. ..... '86. 4522
Stanley, J. C. W. ..... '85. 4127
Stead, W. H. ..... '88. 245
Stewart, D. ..... '86. 15,363
Stone, R. ..... '88. 5399
Storey, J. ... '84. 6051. '85. 491
Sugden, S. S. ..... '87. 1033
Sutton, J. E. ..... '84. 5996
Swan, D. ..... '86. 2310
Swingler, W. H. ..... '87. 4023

Taylor, A. ..... '87. 8816
„ C. ..... '88. 12,964
Tepper, E. ..... '87. 14,543
Terrell, T. ..... '84. 8783
Thake, F. ..... '87. 14,245
Thiebaut, E. ..... '84. 10,100
Thomas, L. H. ..... '87. 5342
Thompson, C. ..... '84. 14,468
„ W. P. ..... '84. 7281
'85. 9280. '86. 3572. '88. 720. 4279. 5577. 6478. 7854 8435. 14,040.
Thomson, B. L. ..... '84. 5565
Todd, E. N. ..... '87. 6870
Trenemen, W. ..... '85. 10,808
Trimming, O. ..... '87. 7809
Turnbull, R. ... '84. 3103. 13,280
'88. 10,601
Turner, W. H. ..... '87. 120
Tweedale, C. L. ..... '87. 4648

United States Waterproofing Fibre Co. ..... '86. 2616

Vale, A. A. ..... '85. 9614

Wailes, E. F. ..... '88. 6012
Wallace, J. O. ..... '88. 1101
„ W. ..... '84. 9925
Walley, H. ..... '84. 5237
Walton, F. ..... '86. 14,046
Ward, A. J. ..... '85. 10,838
„ W. ..... '88. 1101
Warner, M. ..... '84. 1075
Wass, A. G. '85. 9249. '86. 9992
'87. 13,885
Watkins, C. A. ..... '86. 78
Watson, J. ..... '87. 8786
Weild, E. ..... '85. 791. 13,156
Weiss, A. ..... '87. 10,656
Wellington, H. ..... '85. 9280
Wendling, F. ..... '86. 1086
'88. 10,757
Wetter, J. ..... '84. 7190
Whipple, J. P. ..... '84. 1915
Whitaker, H. S. ..... '84. 14,661
Whitney, J. F. ..... '85. 7121
Wilding, R. ..... '88. 2478
Wilkins, G. A. ..... '87. 5342
Williams, M. ..... '84. 578. 579 7255
Williamson, G. H. ..... '85. 9251
„ R. ..... '85. 561
Willis, R. ..... '84. 14,316
Wilmer, H. ..... '84. 10,624
Wilson, E. S. ..... '87. 1057
„ W. V. ..... '84. 6051
'85. 491
Winkler, A. ..... '87. 10,746
Wirth & Co. ..... '84. 8036
'86. 2878
Wirth, F. ..... '84. 2539
Wise, W. L. ..... '85. 1232
'86. 7903. '87. 6323
Wolff, O. ..... '84. 2896
Wotton, W. O. ..... '88. 11,554

Zeleny, J. ..... '87. 10,656
Zimmer, C. ..... '84. 8036

Digitized by Google

PAINTS, COLOURS, AND VARNISHES.

Patents have been granted in all cases, unless otherwise stated. Drawings accompany the Specification where the abridgment is illustrated and also where the words *Drawings to Specification* follow the date.

A.D. 1884.

267. Day, W. Jan. 2.

Antifouling-compositions for ships &c. A priming of crude naphtha or similar spirit is first applied. The composition consists of a mixture of naphtha, india-rubber, resin, tar, pitch, and Portland or Roman cement, lime, or similar substance. The latter ingredient is sometimes omitted. When desirable a layer of hot asphalt may be applied over the composition. The invention is also applicable to caissons, water tanks, &c.

340. Pearce, E. J. Jan. 2.

Antifouling-compositions for preserving bottoms of steel and iron ships, and preventing rust and sea-weed from accumulating on them. The composition is formed by boiling together orange shellac, white lead, red lead, vegetable pitch, marine driers, and linseed oil. When cold it is thinned with turpentine and applied with paint brushes.

379. Bradley, A. J. Jan. 2.

Polishing-liquids for cleaning and reviving furniture. One pint of raw linseed oil, one pint of coloured vinegar, and one pint of methylated spirits are mixed together by any suitable mixing-apparatus; two ounces of soda are dissolved in half a pint of spirits of salts, and the solution added to the mixture. The polish is applied with a small piece of cottonwool or soft material, and the article is afterwards wiped with a soft duster.

542. Russell, E. A. Jan. 3.

Polishing-liquids for furniture, brass, &c. The polish is composed of 34 parts by measure of vinegar, 5 of methylated spirit, and 6 of linseed oil, mixed with about four teaspoonsful of the aniline dye known as Bismarck brown.

578. Williams, M. Jan. 3.

Staining; varnishing.—A solution of varnish gums in methylated spirit coloured by aniline dyes is used. This varnish is applied in coats and rubbed down with sandpaper after each coating. In imitation of different woods, a black stain is first applied irregularly to imitate the grain of the wood required, and then varnish, suitably coloured, is applied as above. Mahogany, walnut, pitch pine, oak, satin-wood, &c. may be thus imitated, and varnished red, blue, &c. wood obtained.

579. Williams, M. Jan. 3.

Paint media.—A drying-oil is obtained by distillation from resin or colophony containing no animal matter or glycerine. The resin is first gently heated to expel spirits, water, &c., and then more strongly heated, when resin oil comes over. This is kept at a temperature of about 300° F. for 10 hours to expel all spirits and water, and then dried by treatment with lead or manganese oxides in the ordinary way, steam or hot and cold air being blown in.

1075. Warner, M. Jan. 9.

Preservative compositions. — Compounds of chromium, particularly potassium chromate and bichromate and chrome alum, are combined with size or other gelatinous substance. The solution

P 10395—1000—6/94 Wt 5973 D & S

Digitized by Google

may be mixed with the colours used in the manufacture of paperhangings, or applied to the paper before or after it is hung on the walls. For protecting gilt frames a mixture of a weak solution of chromic acid and concentrated size is employed. The preparation is also applicable for the preservation of photographs, drawings, paintings, documents, fabrics, &c. The solutions of gelatine and chromic compound may also be applied in succession instead of being mixed together.

1915. Imray, J., [*Whipple, J. P.*]. Jan. 22.

Pigment distributers.—A tapering needle P is vibrated in and out of a colour receptacle R and in front of an air jet by which the pigment is distributed over the paper. The needle is worked by a vaned crank-wheel G driven by a portion of the air current conveyed through the branch F of the air pipe B, the crank-pin being adjustable to vary the stroke of the needle. A further adjustment, capable of being applied while the apparatus is in use, is provided in a spring-lever M to which the needle-arm is linked. The air supply is regulated by the arm D. Instead of the needle above mentioned, a bow needle having its shank flattened at right-angles to its backbone may be used, the distributing-part of the needle consisting in this case of a thin wire attached to the ends of the backbone.

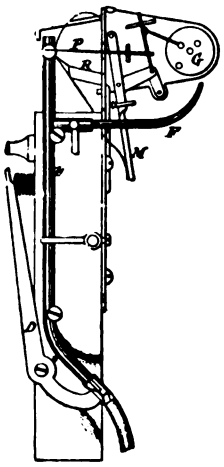

2474. Shepherd, A. Jan. 31.

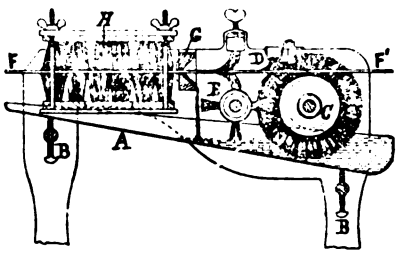

Painting laths for venetian blinds, bedsteads, &c. The paint is contained in a trough A, capable of being adjusted by thumb-screws B, B to maintain a uniform level of the paint. A thin circular brush C at one side of the trough revolves on an axle bearing in the sides of the frame; the lower part of the brush dips into the paint, and the upper part brushes against the edge of a channel D, paint being thus raised up to the channel D, down which it runs over the lath F, F¹. Just in front of C, and gearing with it by suitable wheels, is another horizontally-rotating brush E which dips into the paint and paints the lower face of the lath; immediately above E is a stationary brush adjustable vertically by a thumb-screw. In front of this pair of brushes is a scraper G formed of two pieces of wood pressed together by a spring, and this scrapes the superfluous paint from the lath. Lastly, there are several stationary finishing-brushes H, adjustable vertically by screws and fly nuts. The lath is put in at the end F¹, passing under D, over E, and through G and H; the excess of paint runs back into the trough.

2539. Wirth, F., [*Fischer, O.*]. Feb. 1.

Paint media and body colours.—A body colour is composed of blood, linseed, water, and potassium chromate. As a substitute for linseed oil in mixing colours, the above composition is mixed with petroleum, linseed oil, resin, pyrolusite, and hydrochloric acid, the whole being mixed by the aid of soap-water.

2630. Germot, A., and **Rivière, L.** Feb. 2.

Resins and resinous compounds; varnishes.—Solid or semi-solid copal resins are dissolved by oleic acid (obtained from stearine works), at a temperature, varying with the nature of the resins to be dissolved, from 50° C. to 150° C. The resins are also dissolved by ethylic and benzoic aldehyde, liquid and melted camphor, and chloroform, forming an elastic product similar to the first. These solutions, containing all the essential oil of the resins used, give substances applicable for the manufacture of new plastic materials, and sometimes having the elasticity and consistency of india-rubber. Being entirely soluble in spirits of turpentine and in oil, they may be also used in the manufacture of varnishes.

2841. Hirons, C. F. Feb. 6.

Paint media.—Paint for use in ornamenting metallic surfaces is made by grinding the pigment with the smallest possible quantity of linseed oil, to which half its bulk of mixing-varnish is afterwards added, together with a few drops of spirit varnish.

2896. Wolff, O., [*Bergh, A. T.*]. Feb. 7.

Paints, waterproof; varnishes.—Relates to oil colours or paints, and oil varnishes. The paint or varnish is made weather and water proof by the addition of an extremely-hard silicious compound of lead or silver slag, containing about 25 per cent. of silica and oxides of lead, iron, zinc, tin, and other metals.

Digitized by Google

3103. Fell, R., Cohen, A. M., and **Turnbull, R.** Feb. 11.

Painting ships. For drying the bottoms preparatory to painting, a portable apparatus is used, consisting of a light carriage A mounted on wheels supporting a small stove B by which air is heated. A fan C driven by the hand-wheel D is employed to blow the fire and discharge the heated air along a pipe and out through an elongated nozzle which is moved over the hull. By this apparatus the moisture can be speedily driven off a vessel's bottom to make it ready for painting. In some cases the heating and blowing appliances may be stationary, suitable pipes being laid along the bottom of the dock to which delivery pipes and nozzles may be attached where required.

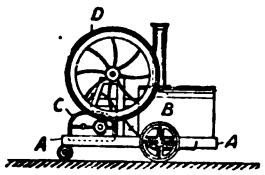

3279. Heywood, J. Feb. 14.

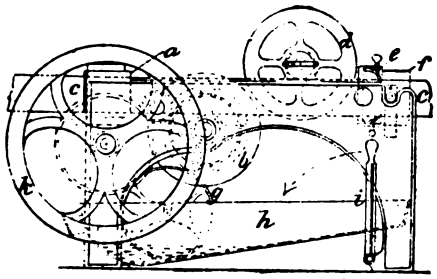

Painting laths. The lath *c* passes into the machine between guide-rollers *a* to a pair of rotary brushes *b* by which the paint is applied, thence to smoothing-brushes *d* and rubber-faced clamps *e*, and to the finishing-brushes *f*. The brushes *b* are fed with paint from the trough *h* by the wheel *g*. By means of the lever *i* the inclination of the trough *h* may be changed, and therefore the depth of *g* in the paint varied. The brushes &c. are all driven by suitable gearing from the flywheel *k*.

3536. Lyte, F. M. Feb. 18.

Antifouling-compositions for ships' bottoms, subaqueous structures, &c. Relates to the process described in Specification No. 5375, A.D. 1883. Before applying the antifouling-composition described in that Specification the hull is coated with a paint formed of asphaltum, Stockholm pitch, or petroleum residue dissolved in benzoline or crude naphtha. With the above is mixed powdered alumina or magnesia thoroughly incorporated with a mixture of equal parts of raw and boiled linseed oil to give the paint the proper consistency. Red lead may be used in addition when desired, as also may peroxide of lead or some other drying-material.

4348. Haddan, H. J., [*Folger, W. D.*]. March 4.

Antifouling-compositions; paints, waterproof.—Relates to an antifouling, anti-corrosive, and preservative paint, for all works exposed to the action of the sun, weather, and water, such as iron ships, bridges, telegraph poles, &c., and consists of a composition containing iodine, powdered carbon, spirits of turpentine, carbolic acid, red ochre, and linseed oil. Driers and additional linseed may be added before use if necessary. The composition is applied with a brush like ordinary paint.

4796. Layden, P., and **McLean, W.** March 12.

Priming and antifouling compositions for ships. The priming-paint is composed of 12 parts of some resinous gum dissolved in benzoline or other spirit, which, together with 3 parts of gum guaiacum in 2 of knotting varnish, is slowly dded to a mixture of 3 parts of teak varnish, 5 of Stockholm tar, and 30 of colouring-matter contained in a suitable vessel. The whole is stirred for 12 hours, after which it is ready for use, and is applied in the ordinary manner by a brush. The antifouling-paint is applied when the priming coat has thoroughly dried. It is formed of 5 parts of gum catechu, 7 of teak varnish, and 3 of Vienna or Schweinfurt green, together with 15 of resinous gum dissolved in benzoline or other spirit added to a mixture of 1 part of gold bronze, 5 of Stockholm tar, 6 of black varnish, 3 of Prussian blue, and 37 of colouring-matter. The resulting compound is briskly agitated for 12 hours, and is then ready for use. The above quantities of the different constituents may be varied to suit circumstances.

4803. Morley, S. March 13.

Painting.—Self-feeding brushes for painting &c. are made with a hollow handle *a*, through which passes a tube *b* terminating at the head of the brush in a T piece *c* from which small tubes *d*, *d* pass through the brush to the bristles; *e* is a coupling by which the flexible tube *f* is connected to the handle. The liquid to be used is supplied from an elevated tank or other suitable source through the said flexible tube. The handle may be made solid and the tube arranged to run along it outside.

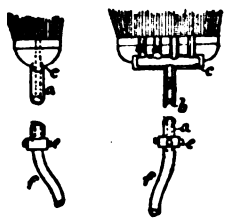

5002. Rees, C. W. March 17.

Polishing, French and like.—For metallizing the surface of a wooden article is prepared as for French polishing, and sized with white lead or plaster of

Digitized by Google

Paris. It is then French-polished with a ground colour suitable to the metallized appearance required, as for instance, using ground turmeric for brass &c. A glaze is then applied, and allowed to stand until hard, when the surface is rubbed over with a transparent polish, dabbing the rubber in bronze or other powder. A slight coat of transparent polish is then applied to the surface, which is next spirited up.

5192. Martin, J. C. March 20.

Pigments.—Red lead, (or orange lead, or a mixture of these with white lead), is treated with a weak solution of alkali and a substance known commercially as "aniline scarlet," the quantities varying with the shade to be produced. Acetate or nitrate of lead is then added, and the pasty mixture dried in a stove. The red pigment produced is ground with oil in the ordinary way.

5237. Walley, H., and **Gare, T.** March 21.

Varnishes; preservative compositions; paint media.—Resin and gum thus are melted, and petroleum, benzoline, or bisulphide of carbon is then added, and afterwards boiled linseed oil with or without a little india-rubber or caoutchouc. The proportions vary according to the use to be made of the compound. It may be applied to stone, brick, paper, ropes, fabrics, driving-belts, walls, metals, &c., and either alone or mixed with pigments.

5317. Reddie, A. W. L., [*Dillies et Cie.*]. March 22.

Preserving; preservative compositions.—For preserving fibres or tissues, they are soaked in water, dried in the air, and then put in a bath of tannic acid (2–4 kilogs.) and water (500 litres) with sometimes 1–2 kilogs. of birch-bark oil. After about two hours' soaking, they are removed and dried, being then proof against decay.

5565. Thomson, B. L. March 27.

Preservative compositions for use in sheathing ships' bottoms. The vessel's bottom is prepared to receive the sheathing by filling up the recesses caused by the lapping of the plates with a plaster composed of granulated cork and resin or oil, to which a solution of creosote is added as a preservative. Or the above materials may be rolled into sheets backed with canvas soaked in an india-rubber solution. These sheets are attached to the vessel's skin by an india-rubber glue or other suitable adhesive solution. The whole is then covered with a layer of felt, paper, or textile fabric saturated with india-rubber. On this the plates, which may be vitrified as described in Specification No. 4658, A.D. 1884, if necessary, are caused to adhere by a similar solution to that above. They may be further secured by nails clinched against the ship's plates.

5972. Knight, H. April 5.

Pigments.—Consists of a mixture of zinc oxide and sulphide with or without the addition of barium sulphate, magnesia, &c. The zinc oxide is either added to the zinc sulphide and other constituents and calcined therewith, or the calcined or uncalcined sulphide may be intimately mixed with the oxide by grinding.

5996. Andrews, G. J., and **Sutton, J. E.** April 5.

Antifouling-compositions.—Litharge and corrosive sublimate are boiled in linseed oil until dissolved. Bitumen and black pitch are then added, and the whole heated together. When cool, red lead is stirred into the mixture. The composition may be applied whilst hot, or can be thinned as required with spirits of turpentine.

6051. Wilson, W. V., and **Storey, J.** April 7.

Varnishes.—One hundred parts of nitro-cellulose are dissolved in about three hundred of amyl acetate to form a varnish for coating metals, wood, leather, paper, &c. Some pigment and a little essential oil may also be added.

6490. Ryrie, A. April 18.

Antifouling - compositions.—The composition is made by mixing creosote oil with clear resin, Scotch naphtha, purple brown oxide of iron, and methylated spirit. Stockholm pitch may be used instead of the resin, and benzene or other hydrocarbon may be substituted for the naphtha. The oxide of iron simply serves to give body to the composition, and hence it can be replaced by white lead or zinc oxide &c. A similar composition, but containing less creosote oil, is used, when required, for giving a first coat to the vessel.

6885. Furnival, T., and **Daniels, G.** April 28.

Painting and varnishing paper. Relates to an apparatus for colouring, varnishing, or otherwise treating paper. The colour or varnish roller A revolves in fixed bearings, and the impression roller B in sliding bearings, in the frame C. The roller A is made to revolve much faster than B, and is partially immersed in a trough D containing the colour, varnish, &c. This trough can be moved up and down by a rack E and pinion F held in position by a ratchet-wheel G. The thickness of

Digitized by Google

the coating is regulated by a wedge H, raised and lowered by a screw I. The bearings of the rollers are tongued and grooved into a pair of casings in each side of the wedge, having sloping sides. The roller B is moved to or from its work by a screw L working in a fixed nut, a spring securing a yielding pressure on the paper. An adjustable scraper M regulates the thickness of material carried round by A. A scraper O removes any liquid from B into the front division of a trough P. A washing sponge or pad Q, supported on levers W pivoted at X and adjusted by screws Y, is made to revolve in an opposite direction to the roller B, and is kept moist by water or other solvent in a second division of the trough P. Moisture is removed from B by an india-rubber scraper. The paper is guided on tapes from the table R over rollers Z, Z, and passes down between the cylinders when a number of fingers lift the sheets on to travelling tapes V. The paper is then removed by an assistant.

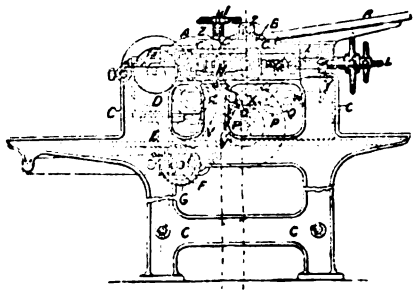

7130. Clift, S. May 2.

Painting on damp paper. The Figure shows a section of a vessel or pan used for painting on damp paper, the sides A of which are turned up and over so that the lower edge, when the pan is in position for use, serves as a water trough, and the sides together with the wood strips C serve to hold the paper. To use the apparatus, a sheet of absorbent paper B is placed in the pan, which is then filled with water, emptied, and the paper to be painted on wedged in by means of the wood strips C. The lower edge retains sufficient water to keep the paper moist while painting.

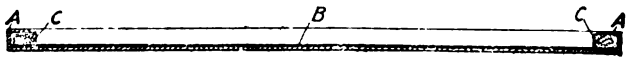

7145. Johnson, J. H., [*Semal, A.*]. May 2.

Coating surfaces with liquids; preservative compositions.—A solution of gutta-percha or caoutchouc in benzene or an equivalent solvent is mixed with a bodying medium such as white lead, and with colours if desired, and floated upon water or other liquid. If several colours are used they may be separately floated upon the liquid and mingled so as to give a marbled effect. Articles are then coated with the film by dipping, or by applying it directly to their surfaces, and are afterwards varnished.

7190. Wetter, J., [*Forquignon, L.*]. May 3.

Painting.—In colouring engravings, photographs, and the like, the colours are applied to the under-side of the sheet carrying the picture, and the sheet is afterwards made transparent. The paper should be sufficiently sized to prevent it from blotting. Photographic copies obtained with salts of platinum are preferable to copies obtained with salts of silver. Before applying the colour the sheet is placed against a window or upon a glass desk. After the sheet has been coloured it is rendered permanently transparent, by dipping it into a bath of white wax melted or dissolved in spirit of turpentine. The excess of liquid is allowed to drop off, and the sheet is placed between sheets of blotting-paper. The thin sheet may then be drawn on cardboard, satined, and enamelled like an ordinary photograph.

7255. Williams, M. May 5.

Washes.—Dry slaked lime is intimately mixed with salt, or the salt may be dissolved in the water used in slaking the lime, and the mixture is used for distempering, colour-washing, agricultural purposes, &c.

7281. Thompson, W. P., [*Air Brush Manufacturing Co.*]. May 6.

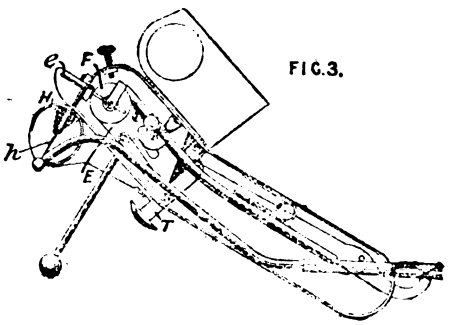

FIG. 3.

Pigment distributers.—Relates to apparatus for distributing paint over a canvas or other surface by means of an air jet ejected on to a needle moving in and out of a pigment receptacle. According to the present improvements the needle *h* is connected with the crank of the wind-wheel F by means of a slotted lever *e*, and the wind-wheel

Digitized by Google

and lever spindle are carried by a pivoted plate E linked to a thumb-lever T. This lever is also connected with a valve for regulating the air supply, and accordingly by a single movement of the thumb of the operator the velocity of the needle and its length of stroke can be simultaneously increased or diminished, the stroke being regulated by the position of the above-mentioned plate. The pigment receptacle H has a spoon-like form, and is pivoted for convenience of filling. An air pump is described worked by a treadle and provided with a reservoir to ensure a uniform supply of air.

7448. French, A. May 9.

Pigments, black. Lead fume, the sublimate deposited in the flues &c. during the smelting of lead ores, is mixed with a solution of crude sodium sulphide or other alkaline sulphide. The precipitated lead sulphide is separated by filtration, washed, pressed, dried, and finally gently crushed, when it is ready for use.

8036. Clark, A. M., [*Wirth & Co.* acting for *Kissel, A. K.*, and *Zimmer, C.*]. May 21. *Amended.*

Resins and resinous compounds, hardening. An alkaline earth or its carbonate is added to resins, balsams, resinous compounds or products, and natural or artificial bituminous products, in a softened state. The acids present are either wholly or partially converted into salts of the alkaline earth, and the resulting substance is increased in hardness in proportion to the amount of the alkaline earth or its carbonate which has been added.

8179. Snell, S., and **Hickin, W.** May 26.

Paints, removing. —Relates to an oil lamp or burner for burning off paint.

The wick case is flat, and is attached to the reservoir, which is tubular and forms the handle, by a union joint.

8332. Hautrive, J. May 28.

Preservative compositions for metals &c. Either bitumen, drying-oil varnish, tar liquid, or india-rubber, &c. is mixed with powdered graphite or "plumbagine, commonly called black-lead," combined with turpentine or alcohol. About 1 gallon of bitumen &c., 2 quarts of turpentine, and 1 lb. 5 ozs. "plumbagine" are suitable proportions. The mixture is applied as a paint, and may be burnished if required; it is suitable for application upon iron, wood, slate, zinc, paper, cloth, roofing, wagons, tramcars, carriages, tarpaulins, stone, &c.

8712. McQueen, J. June 7.

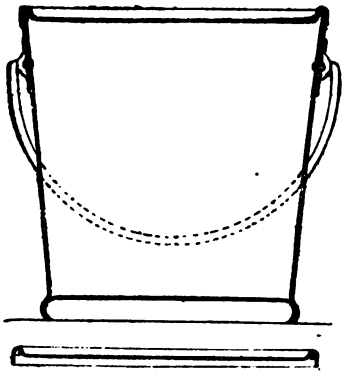

Paint and like cans.—Relates to a method of effectually securing the lids to cans and the like for holding paint or other viscous substances. This is effected by turning the outer edge of the lid upwards, and then the outer half of this flange downwards. Between the sides of this flange a packing of cotton or other suitable material is inserted. The flange fits over the edge of the can, and is further secured by two strips of metal riveted to the side of the can, which fit over the flanged part of the lid. The lid may have a small strap handle for lifting on or off. The vessels may have ordinary wire handles fitted to their upper parts, as shown.

8783. Terrell, T. June 10.

Pigments.—Red oxide of iron prepared from copperas or iron ores is heated to redness in a muffle or reverberatory furnace and partially reduced by the addition of ground sulphur, thus producing pigments of various shades of purple &c., the depth of colour depending upon the amount of sulphur used.

9105. Brydson, J. June 17.

Preservative compositions; body colours; paints, waterproof.—To protect iron surfaces from damp corrosion, the surfaces are treated successively with the following compositions, which serve also as a ground for painting &c. (1) A varnish of 2 gals. linseed oil, ¾ lb. magnesia, ½ lb. sugar of lead, and 2 lbs. litharge mixed with solution of 3 lbs. resin in turpentine. After cooling, 7 lbs. zinc oxide and 1½ lbs. hydrate of lime are added. (2) A liquid gum of about 2 gals. alcohol, 4½ lbs. copal gum, 2 ozs. dragon's blood, ½ lb. sugar of lead, 2 oz. beeswax, and 2 gals. turpentine. (3) Grounding consisting of 14 lbs. sifted wood powder, 7 lbs. wood powder, and 2 lbs umber made up with water, and 2½ lbs. hydrate of lime.

Digitized by Google

9509. Pitt, S., [*Pictet, R. P.*, and *Brélaz, G. L.*]. June 27. *Drawings to Specification.*

Resins.—By evaporating the residual liquors from wood treated with sulphurous acid and pressed in a hydraulic press, colophony and resins are obtained.

9803. Blane, Sir S. J. July 5.

Paints, waterproof and fireproof; varnishes.—Relates to the process described in Specification No. 1432, A.D. 1883. "White peat" or kieselgühr is subjected to an intense heat and mixed with "slag-jelly" made by treating slag with hot acid. This material is mixed with paints, varnishes, &c., and renders them fire, damp, and weather proof. Thus, suitable white paint may be made of slag jelly 16 parts, kieselgühr 8, zinc oxide 23, sodium silicate 23, and lime water 30 parts.

9888. Liebhaber, L. E. A. E. D. de. July 8.

Pigments.—Certain stones, such as Bath stone and yellow sandstone, are changed in colour, especially to red or pink, by the action of heat. The blocks of stone are immersed in or floated upon melted lead or fused alloy, contained in a tank of convenient size, for a sufficient time, and are turned from time to time. The temperature of the bath is determined by the nature of the stone. A furnace or oven may be used instead of the heating-tank of lead &c. Stone thus treated may be ground to a red or pink powder and used in place of hearthstone for colouring stairs, window-sills, &c. in front of a house.

9925. Wallace, W. July 8.

Varnishing paper or the like. Relates to a machine for gumming or varnishing sheets or tickets in such a way that the gum or varnish will not be transferred from the gumming to the pressure roller after a sheet has passed. The sheets are fed on endless tapes *f* between the gumming and pressing rollers *b* and *c*. The latter roller is supported in bearings resting on springs *d* and capable of sliding vertically in slots in the frame *a*. The roller *c* is normally out of contact with the gumming-roller *b*, but is raised towards it by cam-segments *g* on each end which bear against a fixed roller *h*, the roller *c* dropping when the sheet is gummed. The segments *g* are made adjustable to suit the length of the sheets to be gummed. The roller *h* can be adjusted relatively to the roller *c* by a bent lever *i* carrying an antifriction roller i^3 and provided with a projection for holding it in position on a perforated segment *k*. In order to arrest the movement of the sheets when in position to be gummed, a series of stops are provided which project between the tapes *f* and are carried by levers *s*, but are withdrawn at the required moment by cam-pieces *t*, the springs *u* bringing the levers back to position. Endless threads *v* prevent the adhesion of the sheets to the roller *b*. The machine is driven from a pulley *l* by belts *m*, *z*, and *p*. The gum or varnish is fed into a trough *x* from which it passes by a roller *y* to the roller *b*.

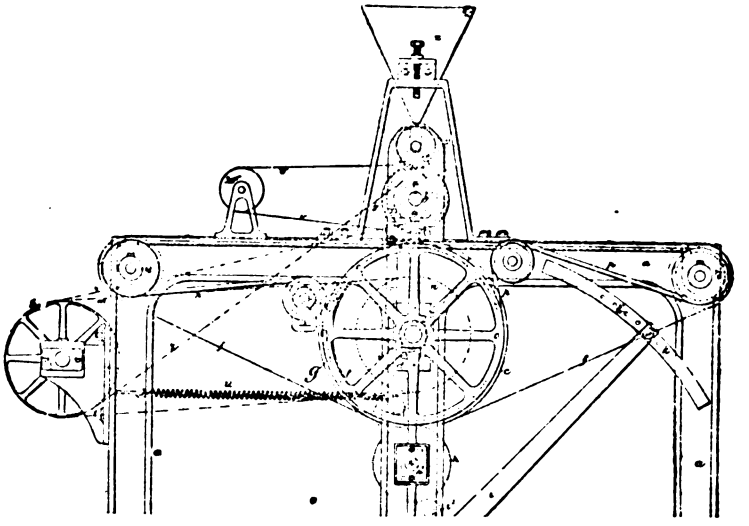

10,100. Newby, E. H., [*Thiebaut, E.*]. July 12.

Pigments.—Colouring-matters suitable for paints are prepared from grapes and raisins or from the residues of grapes and raisins used in the manufacture of wines and spirits. Such residue is pressed, and lixiviated until completely exhausted by boiling water, the first two baths of which contain caustic potash or soda. The juices obtained are filtered, and the colouring and other extractive matters precipitated from the solution by the addition of sufficient dilute hydrochloric acid. The precipitated lac, which consists chiefly of the colouring-matters of the grapes, is thoroughly

Digitized by Google

washed and drained, then dissolved in ammonia of 10° Bé., and the solution put in closed vessels only half filled and placed in a stove at 30° C. for ten days or more. The liquid is afterwards filtered, the ammonia distilled off, and the remainder evaporated to the required degree in the open air. The residue may also be extracted by macerating in ammonia and afterwards distilling off the ammonia from the solution obtained. Or the extract may be obtained by infusion or decoction. Or the residue may be treated with boiling water as by the first method, and the soda or potash precipitated by hydrofluosilicic acid. The saline substances may be eliminated by alcohol as in sugar manufacture, and the lime may be precipitated from the liquors by any suitable reagent. When used grapes or raisins are employed, the extractive matters are obtained by maceration, infusion, or decoction with water containing potassium or sodium carbonate. The juices thus obtained are filtered, and the colouring-matters precipitated by an acid. The precipitated lac is then washed, drained, dissolved in dilute alcohol, filtered, and concentrated.

10,457. Pickering, J., and **Saale, H. E. A.** July 22.

Antifouling-compositions for ships' bottoms and submerged metal structures. Resin, boiled linseed oil, turpentine, and spirit of tar are heated together, and when cold mixed with a shellac varnish composed of shellac dissolved in methylated spirit, a small quantity of "galipot" being added. With this mixture suitable quantities of carbonate of baryta, arsenic, powdered oyster shells, oxide of zinc, red lead, quadroxalate of potash, and sugar of lead or some other dryer are thoroughly incorporated. To give body and colour to the paint, Venetian red or other pigment may be added.

10,624. Wilmer, H., and **Bolas, T.** July 26.

Paints, materials for.—A paint for railway signals consists of a mixture of 1000 parts lac (shellac, sticklac, &c.), 1530 parts alcohol (ethylic, methylic, or methylated spirits), 200 parts Burgundy pitch, and 800 parts of vermilion; it is applied in the ordinary manner. Instead of Burgundy pitch, other substances which give the requisite pliability to the film of paint left on evaporation of the alcohol may be used.

11,660. Lake, H. H., [*Brown, L.*]. Aug. 26.

Polishing, French and like; paints; preservative compositions.—Sublimated zinc powder formed in the process of reducing zinc ore, or the dust which is one of the products of the distillation of zinc ore, is utilized for metallizing the surface of wood, metal, paper, pasteboard, stone, brick, pottery, textile fabrics, &c., or as a paint or protecting or fireproofing composition. The zinc is mixed with oil or any other suitable vehicle, with or without an admixture of colouring-matter. After the wood &c. has been coated with this composition it may be burnished and subsequently varnished.

11,930. Connor, J. Sept. 3.

Pigments.—Relates to processes for making a black pigment from the bituminous mineral known as "bonnet," occurring in localities where coal and shale are found. The mineral may be used after being simply ground, but it is preferred to mix it with five per cent. of lime and to heat the mixture in a retort, the ammonia which comes off being separately collected. The material, after being heated, is reground and subjected to the usual finishing processes employed in pigment making.

12,144. Hinksman, C. Sept. 8.

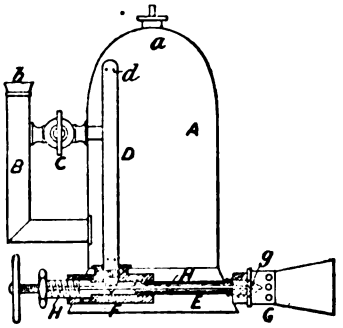

Paints, removing.—Relates to an oil lamp or burner for burning off paint. The vessel A is charged with a small quantity of a volatile oil through an opening at *a* provided with a screw plug. Air is then forced in at the opening *b* in the hollow handle B, and passing by the cock C issues through small holes *d* in the top of the vertical tube D into the vessel. This tube passes down through the bottom of the vessel into the stuffing-box F, screwed to one end of a tube E provided with a nozzle G and traversed by an adjusting-spindle H the pointed end of which fits into and regulates the opening in a conical passage *g* in the mouthpiece. The oil passes from the bottom of the vessel through small holes in the vertical tube to the stuffing-box, and thence by means of a wick surrounding the spindle to the nozzle, which is heated before use by a small wick carried beneath.

12,280. Parkes, A. Sept. 11.

Preservative compositions.—The compositions are for coating or covering and protecting metallic, vegetable, or other surfaces, and consist of carbolic acid, preferably in crystallized condition, and camphor mixed with gum, resin, fat or fatty acids,

Digitized by Google

such as india-rubber, gutta-percha, japanese or paraffin or other wax or other equivalent animal, vegetable, or mineral fatty or oily matters, such as asphalt or bituminous or pitchy matters or products derived from the distillation of coal or shale. The proportion of the mixture of carbolic acid and camphor to the other substances should be about 10 parts of the former to 10 to 20 of the latter. The ingredients are thoroughly incorporated either at the ordinary temperature or at about 325° F., at which temperature they liquefy. The product may be used either as a thick coating or may be thinned with turpentine or other suitable liquid and applied like varnish.

12,653. Lyte, F. M. Sept. 20.

Antifouling-paints. — Consists of a poisonous paint having for its basis the usual substances, mixed with any insoluble compound of mercuric chloride, or any oxychloride of mercury, with a copper salt or basic salt. When used on iron structures a first layer of an inert paint must be used to prevent the reduction of the mercury and copper by the iron.

12,806. Imray, J., [*Schaal, E.*]. Sept. 25.

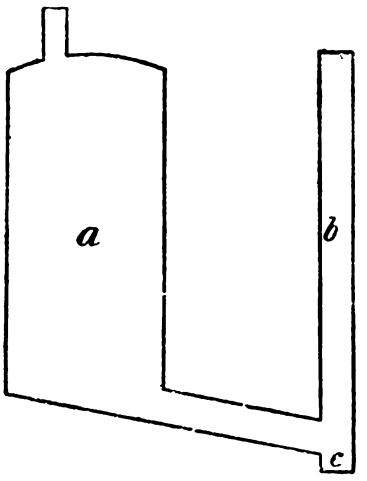

Resins and resinous compounds; varnishes.— Petroleum and hydrocarbons resulting from the dry distillation of coal, shale, peat, &c. are oxidized to form organic acids which by subsequent treatment yield resinous compounds suitable for making varnishes and for various other uses. The oxidation may take place in several ways. (1) Hydrocarbons boiling between 150° and 400° C. are heated to a violent ebullition in a high metallic vessel *a* fitted with a stirring-apparatus and a reversed current cooler, in the presence of caustic alkalies, or alkaline earths, or their carbonates, with compressed air or oxygen. The acids which form combine with the alkali present, forming soaps, which mostly settle and, falling into *c*, may be withdrawn therefrom by scoops or by dissolving out. The difficultly-oxidizable constituents are utilized as lubricants and burning oils. (2) The hydrocarbons are mixed with 20 per cent. of alkaline compounds, with copper salts or other oxygen carriers, and with neutral substances such as infusorial earth, pumice stone, sodium chloride, Glauber salts, &c., and left in contact with the air, preferably in a rotating drum with a reversed cooler, heated by steam. When the organic acids have formed, the soluble salts employed are dissolved out with a little water for re-use, and the metallic oxides by hydrochloric acid. On adding more water the liquid acids are dissolved out, and extracted from the excess of petroleum by means of alkalies. (3) Some hydrocarbons can be oxidized by means of chloride of lime, with which they are mixed gradually while stirring, being cooled or heated as necessary to promote the reaction. The lime is removed by hydrochloric acid, and the acids extracted with alkalies. The residue left is melted for some hours with 50 per cent. of caustic soda at 200° to 300° C., forming more acids. (4) Many hydrocarbons may be oxidized with strong nitric acid in a strong current of air at a temperature of about 100° C., preferably in glass or stone vessels connected together in series, so that the first vessel may be removed, recharged, and made the last of the series. The acids are removed by soda, and the undissolved constituents heated as in (3). The acids produced by any of the above methods all form soaps, and can be separated by distillation, fractional precipitation, or extraction of the liquid acids by benzene, petroleum, &c. When superoxidation occurs, the oxyacids are reduced by zinc powder. The liquid acids are distilled in a vacuum at a temperature of 360° C. whereby resinous portions, similar in property to the solid acids, remain behind. The solid acids yield soap on addition of an alkali; with lime or magnesia they form asphalt-like masses; and their esters, obtained and purified as below, are more or less hard resins, suitable for use in the manufacture of varnishes or as substitutes for wax, pitch, or asphalt. The liquid or solid acids are dissolved in strong alcohol, and sulphuric-acid salts &c. gradually added, the mixture being finally boiled; or hydrochloric acid is led into the alcohol solution till it is saturated. By these means the ester separates, and the excess alcohol is distilled off. Non-volatile alcohols may be heated with the acids under pressure to 120° to 300° C., to form ester combinations, which are also formed by the action of such gases as carbonic acid. The esters may be purified by washing with water and soda and by distillation in a vacuum.

12,807. Imray, J., [*Schaal, E.*]. Sept. 25.

Resins and resinous compounds; varnishes.— Resins from conifers, or resins obtained by oxidation of petroleums and hydrocarbons, are separated into volatile or soft resins and non-volatile or hard resins by distillation *in vacuo* at 300° to 350° C. with superheated steam, or in a current of neutral gases such as carbonic acid; or by extraction with

Digitized by Google

solvents such as dilute alcohol ; and the hard resins obtained are treated with alcohols, such as ethyl, butyl, cetyl, ceryl, &c., or phenols or similar bodies, in the presence of heat with or without pressure, and with or without the addition of substances, such as carbonic acid, hydrochloric acid, sulphuric acid, &c., favouring the reaction, whereby the corresponding ethers are formed, which may be separated into harder and softer bodies by distilling *in vacuo*. These ethers all possess the common property of being insoluble in soda. The hard ethers are useful as substitutes for copal and amber, while the colourless softer ethers, which are distilled off from the former between 240° and 350° C., are useful as substitutes for mastic, dammar, sandarac, &c. The ethers are very suitably employed in the manufacture of lacs and varnishes by treating them with volatile or fatty oils, with hydrocarbons, or with alcohols.

13,280. Fell, A. H., Fell, A. W., and Turnbull, R. Oct. 7.

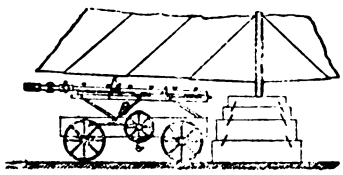

Painting ships. For drying the bottoms of ships before painting, flat burner-boxes, which may be in several pieces jointed together to suit the outline of the hull, are employed, They are supplied with gas by flexible or jointed tubes from mains along the sides of the dock, and by the flat flames thus obtained the hull is dried. The burners A may be mounted on a carriage by rods as shown, their height being adjustable by connection with the inclined rod B, jointed to a horizontal rack movable by the hand-wheel C. Or they may be supported on a long arm projecting from a carriage so that it may be moved laterally and vertically as required ; the burners may be attached to rods by which they may be inclined on the end of the arm.

13,425. Abel, C. D., [*Gehring, G.*]. Oct. 10.

Preservative compositions ; paint vehicles. — Sebacate or resinate of alumina, *i.e.* alumina soap (prepared by precipitating a solution of common or resin soap with alum), is mixed with oil of lavender or other volatile oil, and incorporated with aluminium, or aluminium bronze, by rubbing upon glass, porcelain, or marble to the consistency of a thin syrup. The mixture is applied to the surface of metal, glass, pottery, &c. by a brush or feather, or by printing. The surfaces are then exposed to air or to heat. For iron or steel, the alumina soap is preferably melted on first ; the aluminium coating is put on afterwards, and may then be polished. The compound may be varied by the addition of a flux, such as oxides of bismuth with or without borax, lead quartz, and fluorspar.

13,442. Caspar, A. M. F. Oct. 11.

Paints, materials for ; painting. — In making imitation stained glass, to imitate the solder employed with the lead strips for stained glass, bronze powder is mixed with spirit varnish (such as copal dissolved in alcohol), dropped on the cracks &c., and brushed lightly over while damp with bright bronze powder. After drying, the desired colours are floated or painted on one side of the sheet, any superfluous colour being removed by draining or by a rag dipped in methylated spirits, and a coating of mastic varnish and ornamental cardboard strips may be applied over the colours.

13,492. French, A., and Hannay, J. B. Oct. 13. *Drawings to Specification.*

Pigments. — In making white and other lead pigments, lead ores, lead fume, or lead slags containing sulphur, and mixed with sulphur or pyrites if necessary, are heated in a blast furnace. The gases given off contain vapour of lead sulphite, sulphurous acid, &c., and pass out by irregular exits, thus becoming thoroughly mixed. Salt spray is injected into the flue, and this forms gaseous hydrochloric acid with the sulphurous acid and air present ; the hydrochloric acid and lead sulphite then form lead chlorosulphite or some body of similar constitution ; other metals present form soluble chlorides. The temperature of the furnace must be kept constant. The white mass in the condenser is purified by washing, and used either as a white pigment or to form chrome yellow, by mixing it with any suitable chromate or bichromate.

13,548. Charleson, W. Oct. 14.

Varnishes or preservative compositions for coating chip and cardboard boxes, canisters, spinning-bobbins, packing-paper, corks for capsuling bottles, &c., to render them grease and damp proof. One pound of glue is soaked in the greater part of 40 fluid ounces of water, and then dissolved in the same water on a water bath. A mixture of ¼ ounce resin, ½ ounce white chalk, ½ fluid ounce glycerine, and a little water is then added. China clay may sometimes be added in addition to or instead of the chalk, and the varnish coloured to any suitable tint.

13,867. Boult, A. J., [*Bond, S.*]. Oct. 20.

Antifouling-paints ; paints, waterproof.—Mineral bitumen is utilized in the manufacture of preservative and other paints. A black paint is made by boiling 1 cwt. of bitumen, adding 1 gallon linseed oil, and mixing after cooling

Digitized by Google

with 5 gallons turpentine; the mixture is then ground in the usual manner. A damp-proof paint for ironwork is obtained by the addition of resin, red lead, and litharge (or other suitable colouring-matter) to the above; and an antifouling-composition for ships' bottoms &c. by using in addition to these substances paste prepared from West Indian aloes and arsenic.

14,193. Greaves, W. Oct. 27.

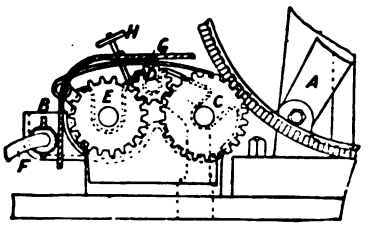

Painting and varnishing.—Relates to attachments for printing-machines for varnishing, colouring, &c. The paper &c. is fed to the cylinder A in the usual manner, and is varnished, coloured, &c. by the aid of three rolls C, D, E, which transfer the substance from the fountain B. The rolls are driven by gearing as shown from the cylinder A. The supply is regulated by a plate G pressed upon the roll D by a screw H. The fountain is supplied from a cistern by a flexible pipe F, arrangements for adjusting the height of the cistern by means of guide rods and springs &c. being provided.

14,278. Barnard, W. H. Oct. 29.

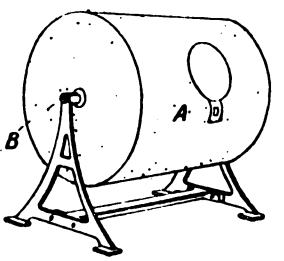

Preserving, special receptacles for. Relates to apparatus for preserving substances from becoming heated or mouldy, being an improvement on apparatus described in Specification No. 4436, A.D. 1884, for preserving tobacco. A perforated cylinder A is mounted on spindles B; the cylinder may be divided into several compartments. By revolving the cylinder the contents are turned over.

14,316. Willis, R. Oct. 29.

Painting and varnishing; polishing, French and like.—Powdered glass is made with a sufficient quantity of varnish into a soft paste, thinned as required with spirits of turpentine or other suitable liquid, and is well rubbed into the pores of the wood. The surplus material is removed and the wood is rubbed with fine sandpaper, after which it is ready to receive polish, varnish, or paint. Powdered glass of the necessary fineness may be obtained by suspending powdered glass in water, and after partial subsidence drawing off the water holding the finer particles and allowing these to settle.

14,468. Thompson, C., and **Hammond, C.** Nov. 1. *Drawings to Specification.*

Stains, wood and like.—The condensed products from a purifier for gas made from superheated steam, air, and oil, form a wood stain.

14,661. Whitaker, H. S. Nov. 6.

Paints, luminous, for applying to the bottoms of drinking-vessels in order to make them visible at night. The paint consists preferaby of 3 parts by weight of calcium sulphide, 1 of gelatine, and 3 of hot water. This is rendered waterproof by copal varnish, ammonium-bichromate solution, or the like.

14,776. Parkes, A. Nov. 8.

Preservative and antifouling compositions.—Relates to a composition for coating metal, wood, and other surfaces. Gums, resins, camphors, drying-oils, cotton-seed oil, bitumen, paraffin, india-rubber, gutta-percha, or other hard or soft gums, or suitable combinations of them, are dissolved in carbolic acid, or carbolic acid and creosote or other suitable liquid hydrocarbon. If the carbolic acid be employed in the solid state the mixture should be heated to 300° to 400° F.; if in the liquid state a lower temperature will suffice. The composition may be thinned with fluid carbolic acid, naphtha, or other suitable solvent. A poisonous ingredient, such as a compound of mercury or arsenic, should be added when the composition is used for coating ships.

15,121. Best, T. F. Nov. 18.

Varnishes.—Cellulose, after treatment with nitric and sulphuric acids, is saturated with a solution of sulphurous acid and heated at 100° F., preferably in a closed vessel, until the excess of nitric acid has been decomposed. The excess of acids is then removed by pressure, and 10 to 50 gallons of water are added for every 50 lbs. of the mass, which is then washed to remove all traces of free acids, and afterwards submitted to any bleaching process, if necessary, washed with warm water, and dried. Crude camphor is dissolved in its weight of methyl alcohol, or a mixture of methyl alcohol and liquid hydrocarbon, and filtered into a closed vessel through a mixture of fused calcium chloride or other drying-agent with charcoal or other decolourizer or deodorizer. From 55 to 65 lbs. of this camphorated solution are added to every 50 lbs. of the treated cellulose. For a transparent or semi-transparent product suitable colouring-matter is

Digitized by Google

added to the solvent, or for an opaque product suitable pigments are added. The material may be made less inflammable by adding 12½ to 25 per cent. of magnesium borate, and may be used in a semi-plastic condition for varnishing, veneering, or enamelling.

15,857. Gardner, H., [*Höxter, A.*, and *Schutter, G.*]. Dec. 2.

Coating surfaces, compositions for.—A planed or planished surface of wood, metal, leather, millboard, or other material is first saturated or washed with a composition of boiled linseed oil, a siccative, and oil of turpentine. After drying, the surface is coated with a composition of cleaned shiver and English filling-up, mixed with terebine and varnish, to which has been added sufficient nigrosine to give blackness. Lines for notice-boards &c. may be produced with a tooth-plane before the composition hardens, and the incisions may be filled with a composition of mastic colophony and a little cinnabar or other colouring-matter. The surface may be polished after it has hardened. The Specification mentions the application to a great variety of objects, such as blackboards and writing-tablets, barrels, cases, ledges and copings and other parts of buildings, shelving, tables, and ornaments.

15,978. Cotterell, R. Dec. 5.

Polishing, French and like; varnishes.—Picture mouldings, mirror frames, and other decorative surfaces are prepared with clay &c., to receive a coating of a mixture of metallic powder and animal size. When this has been applied the surface is burnished. A coat of varnish made by dissolving gum dammar in benzene prevents decomposition of the metal.

16,106. Kerr, M. Dec. 8.

Polishing-liquids for removing stains, grease, pitch, &c., cleaning paint, polishing door plates, &c. For one quart of the liquid, a pint of strong solution of ammonia, ¾ pint of turpentine, 1 ounce of olive oil and resin, and 4 ounces of water are mixed and agitated together.

16,889. Britten, H. Dec. 24.

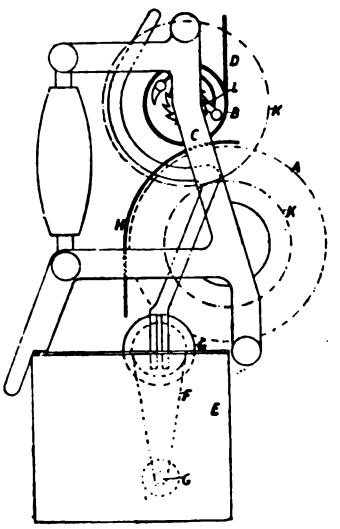

Painting walls and similar surfaces. A rotary brush A and drum B are fixed in bearings in a frame C and geared together by cog-wheels K, K. A rope D is wound round the drum, which also carries a spring and ratchet L in its interior. The brush is fed with paint from the pot E by the endless band F passing over the adjustable pulleys G and driven by friction. A screen H is fixed behind the brush. In use, the end of the rope or chain is fixed near the top of the wall to be painted, and the whole machine is pulled down to the bottom; it is then raised again, when the spring causes the drum to rotate, wind up the rope, and rotate the brush.

Digitized by Google

A.D. 1885.

39. Hooper, S. R. Jan. 1.

Resinous compounds.—Euphorbia juices, previous to mixture with paints or pigments, are mixed with a water-repellent material such as gum resin (shellac) &c. Equal quantities of the gum resin and juices are warmed together in a suitable vessel.

312. Gisborne, J. S. Jan. 9.

Antifouling-paints.—The principal constituent is mercury, 10 lbs. of which is killed with 15 lbs. of chalk. The result is mixed with 9 lbs. of litharge, and 14 lbs. of blend, zinc-white, red or white lead, and the whole is incorporated with boiled linseed oil to a consistency suitable for application with a brush.

424. Henderson, A. L. Jan. 12.

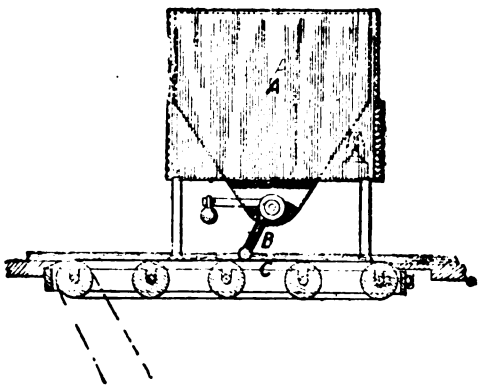

Coating surfaces with liquids.—Relates to coating glass or other plates, or other material, with liquid gelatine or other fluids. The emulsion is placed in a reservoir A surrounded by a water bath and flows through a ⊥-shaped piece B, which is perforated on the lower side of the transverse member. The plate &c. C is carried under the perforations through which the emulsion is discharged, and is carried forward by an endless band. The action of lifting the ⊥-piece opens a grating stop-cock for the discharge of the emulsion.

491. Wilson, W. V., and **Storey, J.** Jan. 13.

Varnishes; paints.—Nitro-cellulose is dissolved in amyl acetate and amyl alcohol, the resulting product having the consistency of varnish. The proportions preferred are :—100 parts nitro-cellulose, 400 parts amyl acetate, and 400 parts amyl alcohol. The varnish product may be used for the decorative covering of wood, leather, paper, pictures, photographs, &c. These nitro-cellulose compounds are applied directly, for the above-mentioned purposes, or are first incorporated with pigments and diluents, such as china clay, zinc oxide, linseed oil, and tannic acid.

561. Williamson, R. Jan. 15.

Polishing-liquids for furniture. The polish is made by mixing 12 gallons of vinegar lees of 10° Twaddell in strength with 8 gallons of colza oil, 4 gallons of Gallipoli oil, and 1 gallon of turpentine.

791. Weild, E., and **Rickards, H.** Jan. 20.

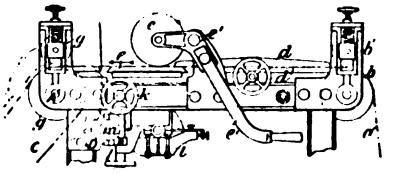

Painting.—Relates to a machine for colouring the edges or selvages of velvets or other fabrics, or for imparting stripes of colour to other parts thereof. The fabric *a* passes from the roll round cross-rails with side gauges, between pressure rollers *b*, b^1, and over a table with adjustable guides *d* for colouring by rotary brushes mounted below a roller *e* covered with a layer of rubber or yielding material. The roller *e* is preferably mounted in pivoted arms e^1. The colour brushes are driven at a speed greater than that of the fabric, and rotate between the sides of slots in stencil plates mounted in the plate *f*. The brushes are adjustable in position by a right and left handed screw and hand-wheel *k*, and they receive colour from a roller running in the colour-box *i*, the brushes and roller being driven from the shaft *m*. The shaft *m* receives motion from the drawing-off roller-shaft A^1 or spur-gearing C, D, the wheel driving the colour roller being splined to slide on the shaft *m* with the colour box as the latter is adjusted in position. The colouring-arrangements are adjustable in height by means of screws *l*. The material is drawn off by pressure rollers *g*, *g*, and passes to a receiving-drum. For materials of constant and regular width, the brush or brushes are preferably mounted in a swinging frame, at one

Digitized by Google

extremity, and the material is caused to pass over a roller mounted in the other extremity, so that the pressure of the brushes can be adjusted according to the tension or take-up.

---

884. Mills, B. J. B., [*Laboré, C.*]. Jan. 21.

Preservative compositions.—A mixture of rock alum and a sulphate, preferably zinc sulphate, is stated to be applied for the preservation of public monuments &c., for hardening soft stones, plaster, &c., for incombustible coatings for woodwork &c., and for coating ships' hulls, conduits, &c.

1232. Wise, W. L., [*Notz, J. F.*, and *Konrad, F.*]. Jan. 28.

Preservative compositions.—A solution is obtained by adding to 90 kilogs. of water, 10 kilogs. of ammonium sulphate, 1 kilog. of ammonium carbonate, ½ kilog. of borax, $\frac{1}{10}$ kilog. of mercury bichloride, the decoction obtained by extracting 2 kilogs. of peppermint in 6 kilogs. of water at 85° C., and 150 grammes of carbolic acid with a specific gravity of 1·062 at 20° C. To this solution are added 6 kilogs. of sodium bitungstate dissolved in 94 kilogs. of water, and as much of a saturated solution of calcium chloride as will prevent solidification or precipitation. The liquid is then put in a vessel provided with an agitator and kept at about 70° C., and is converted into an emulsion by passing into it the products of distillation by heat of 1 kilog. of Peru balsam and $\frac{1}{10}$ kilog. of camphor dissolved in 2 kilogs. of acetic or other ether. Fabrics and other materials to be rendered uninflammable, obnoxious to vermin and the growth of fungi, &c. are immersed in the final product.

1604. Pearce, T. J., and **Beardsley, M. W.** Feb. 5.

Preservative compositions; antifouling-paints.—A solution is formed of the solid residuum obtained in the distillation of heavy petroleums, in carbon bisulphide, or other suitable solvent, the proportions of which will vary according to the desired consistency, equal weights of the carbon bisulphide and the solid producing a limpid solution. For varying the properties, such as hardness or tenacity, of the substance, asphalt, resin, sulphur, &c. may be added. The compound is used for coating surfaces of wood and metal, saturating or otherwise treating paper, fabrics, felt, leather, rope, cordage, netting, &c., as an antifouling-paint, &c. Any suitable colouring-matter may be added to form a mixed paint.

1973. Johnson, J. H., [*Ripberger, G.*]. Feb. 12.

Preservative compositions.—A mixture of castor leaves, laurel leaves, three-leaf leaves, green walnut shell, and gentian root is treated with boiling water, the extract or solution obtained being filtered and salted. The solution is employed for impregnating sacks, boxes, casks, and other receptacles made of fibrous materials, in order to destroy or repel injurious germs &c.

2014. Ford, H. J. T. Feb. 13.

Antifouling-paints for ships. The first or priming coat is composed of equal quantities of coal tar, American resin, and red oxide of iron melted together, and while warm mixed with a similar quantity of petroleum oil and three portions of mineral naphtha, to which is added a sufficient quantity of bisulphide of carbon to render the paint quick in drying. Air-slaked lime is added to give it body, and copal tar in the proportion of half a gallon to each hundredweight of the paint. The second or antifouling coat consists of equal quantities of red lead, red oxide of iron, coal tar, and American resin, melted together and mixed with two parts of petroleum oil and mineral naphtha respectively. Bisulphide of carbon as a drier, and white arsenic to destroy vegetable and animal growths, are added. In place of this second coat the following may be used. Red oxide of iron is ground up with an equal quantity of Stockholm tar, three parts pine varnish, and one of American resin, with mineral naphtha added, and to the mixture thus formed methylated spirits containing shellac is added to make it of proper consistency. White arsenic and mercuric oxide are added to kill animal and vegetable growths.

2248. Heslop, M. Feb. 18.

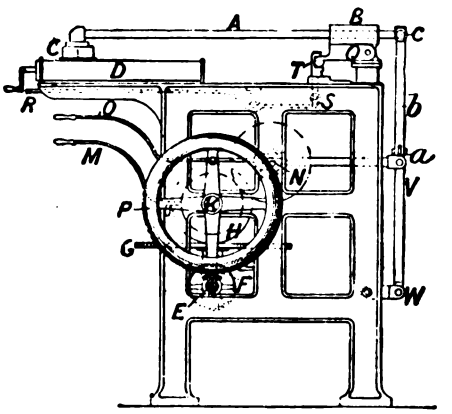

Polishing, French and like.—The invention is described with regard to an ironing-machine for fabrics, but it is stated that suitable appliances for French polishing may be used in place of the iron. A hollow arm A, working to and fro in a socket B, conveys steam to an iron C working over a table carrying an endless belt D. A driving-shaft E actuates a shaft F carrying a disc G which drives a roller H. This roller is mounted on a shaft K

Digitized by Google

on which it may be adjusted by a lever M and clutch. A shaft N driven by spur gearing from the shaft K carries two eccentrics, the throws of which may be varied at will (in the manner described in Specification No. 10,714, A.D. 1884), by moving a handle O. One of these actuates a pin carrying a block Q jointed to the socket B which latter may be raised by a lever B, R, bar S, and collar and fork T, when the iron requires lifting from the table. The other eccentric actuates a lever V centered on a shaft W and jointed at *a* to a lever *b* connected by a universal joint *c* to the arm A. By the combined action of the eccentrics the iron may be made to move in any desired manner over the table. When the machine is not worked by power a hand-wheel P or a treadle is employed.

2615. Hart, W. E. Feb. 26.

Preservative compositions for the prevention of rust. Camphor and resin are dissolved in spirits of wine, and to this solution may be added solid violet ink (Perry's Patent), or other body of the same nature, which takes away the yellow colour, and the solution when acted upon by the sun's rays becomes of a steel colour. In the manufacture powdered glass is used for clarifying it. The coating should be applied by a camel hair brush.

3576. Gullick, T. J. March 19.

Painting on glass windows, mirrors, &c. A special medium is employed, prepared by heating amber with turpentine, treating the residue with linseed oil, and mixing with the solution, adding copal varnish and benzene or other suitable diluent. The pigments used must be perfectly pure and free from lead. The glass to be painted on is cleaned and brushed over with the medium; the painting is then performed, and lac varnish (or a coating of the medium) applied. High lights are produced by a mixture of powdered glass &c. with the medium.

3894. Kingzett, C. T. March 26.

Preservative compositions.—Resin or turpentine is dissolved in alcohol, and saponified with caustic alkali. Various substances may be added, such as phenol, iodoform, fats of any kind, or the compositions described in Specifications Nos. 2210 and 3855, A.D. 1885. The liquids thus obtained are applicable as preservative compositions.

4127. Cooper, F., and **Stanley, J. C. W.** April 1.

Pigments.—A material suitable as a substitute for emery powder is made from pyrites either before or after it has been treated for the extraction of metals therefrom, by pulverizing it and washing it through wire-gauze sieves so as to separate the heavier particles from the lighter, and then dividing the former into grains of different sizes by sifting. When it is desirable to obtain a harder material, slag from iron furnaces or emery powder may be mixed with the material. The lighter particles are dried and ground to an impalpable powder. This material can also be prepared by treating it with sulphuric or hydrochloric acid so as to form a stiff paste, and agitating the mixture until dry, when it is strongly heated until all the acid is driven off, and then ground to a fine powder which can be used as a paint or for colouring paper, the colour varying from light red to deep purple according to the quantity of acid used and the temperature of calcination.

4415. Denniston, P. April 9.

Antifouling-paints for ships, piers, &c. The main ingredient is paraffin scale, which may be employed alone in a suitable solvent, or may serve as the base of a compound in which colouring and poisonous matters are used. A suitable composition may be formed as follows:—2 lbs. resin are melted and added to 10 lbs. paraffin scale and the result mixed with 7 lbs. white lead or other paint, 6 lbs. bronze green, 1 lb. light green, and 2 lbs. arsenic or mercuric cyanide or other poison. The above mixture is applied in the ordinary manner with a brush, but in cold weather requires thinning with paraffin or other oil.

4764. Lysaght, J. April 17.

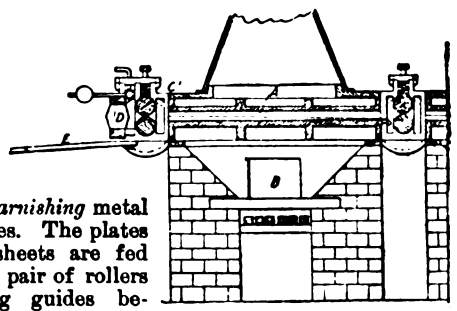

Varnishing metal plates. The plates or sheets are fed by a pair of rollers along guides between rollers coated with india-rubber for the purpose of squeezing off any water. Other rollers and guides convey the sheets to an oven similar to the oven A, which consists of slabs of cast iron at the top and bottom, heated by a fire B. The sheets then pass between rollers into the oven A, thence to the rollers C^1, and finally through brushes D, from which they receive a thin coating of varnish or the like, on to a table E.

Digitized by Google

5359. Lake, W. R., [*Dupret, J. B.*]. April 30.

Preservative compositions; varnishes. — Consists essentially of a mixture of tar with alumina or a salt of alumina. This composition,—either alone or mixed with any number of the following substances, turpentine, pitch, resin, gum, gum resin, bitumen, wax, grease, stearin, essences of various substances, oils, alcohol, ether, naphtha, benzene, tanning-substances, and colouring-matters,—may be used for preserving &c. ropes, bricks and tiles, ships' hulls, reservoirs, &c., or as a varnish.

5798. Crowther, G. H. May 12.

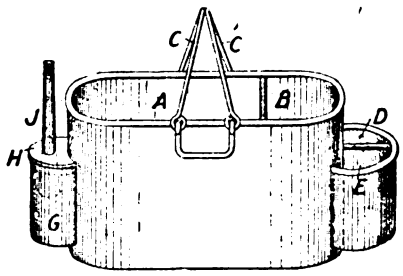

Paint cans.—The Figure is a perspective view of the receptacle, the main body of which is made preferably of the shape shown, with double handles C, C¹, and divided by a partition into two unequal parts, the larger of which A contains paint and the smaller B water into which the brushes are placed when not in use; a screw plug is provided near the bottom of B for running off the water without overturning the can. At one end is fixed, permanently or not, a smaller sub-divided can D E to contain stains and at the other end a can G, with a closely-fitting lid H in which a brush is fixed, for containing "knotting" fluid.

5993. Ford, A., and **Archer, J. A.** May 15. *Amended.*

Varnishes for making translucent materials Wire gauze is coated with a translucent waterproof elastic varnish by being repeatedly dipped into the varnish and allowed to dry after each dipping. A varnish which is suitable for the purpose may be prepared by adding driers to refined linseed oil, and, when it has become clear, either agitating it by an air blast in a closed vessel or allowing it to thicken by exposure to the air while being stirred.

6243. Mewburn, J. C., [*Noback, G.*, and *Gintl, W.*]. May 21.

Varnishes.—A varnish suitable for coating vessels used in cooling beer and the casks used for storing and transporting beer, is made by recovering the resinous matters of hops contained in the "rocks" of the fermenting casks or otherwise, and subsequently dissolving such resinous matter in alcohol with a percentage of ether. The foam of the "rocks" or boiled hops is collected in a filter bag; or the sediments of yeast in the cooling-vessels and in the storage casks are collected in a similar manner. After having allowed all liquor to drain off, the residuum is dried by the influence of heat or the atmosphere. The dry substance thus obtained, after being reduced by grinding, is extracted by alcohol of high standard with or without heating. The alcoholic extract is cooled, filtered, and distilled, and the residuum boiled repeatedly with carbonate of soda and filtered. The final residuum left is the hop resin. In a modification, the waste products are treated with a solution of carbonate of soda or potash, and filtered, the residue, which contains the resinous matter, being then dissolved in alcohol &c. and subsequently concentrated. In a further modification, the waste products are dried and treated with wood spirit, bisulphide of carbon, petroleum-ether, benzol, volatile oils, or other volatile matters whereby the resinous matters are extracted.

6509. Lake, H. H., [*Sandron, A.*]. May 28.

Preservative compositions; preserving. — The Specification describes the process as applied to linen, but the invention is of general application to all substances consisting of vegetable fibre, such as ropes, hose, coverings for metallic cables, &c. The linen is first steeped in liquid consisting of a substance rich in tannic properties, or antiseptic substances such as tincture of chestnuts &c. infused in water at a temperature of 80° C. After drying it is treated in a second bath prepared as follows: To 100 kilogs. of boiled linseed oil, rendered very siccative, is added 100 kilogs. of a substance rich in colouring-matter free from metallic oxides and siccative, from 10 to 25 kilogs. of essence of birch bark, and 10 kilogs. of wax which melts at a high temperature. The linen is dipped in the bath, which is raised to a temperature of 100° to 120 C., and the superfluous liquid removed by passing it between rollers; to give a better appearance it may be passed through a cold bath of linseed oil rendered very siccative. These operations may be performed by hand, or by mechanical means, such as an arrangement of rollers above a vessel with double sides for the circulation of steam, and drying-apparatus. It is claimed that the fabrics are not rendered sticky or brittle, and the ordinary properties of the material remain unimpaired.

6844. Bosshardt, F., [*Graf, H.*]. June 5. [*Complete Specification but no Letters Patent.*]

Pigments.—Zinc dust, from the condenser pipes of the retorts used in distilling zinc, is mixed with paints in the proportions of about one-sixth to two-thirds of the whole. It may be added either as a substitute for, or in addition to, white lead, white zinc, &c.

Digitized by Google

7121. Melville, D., and **Whitney, J. F.** June 11.

Antifouling-paints. — An anti-corrosive paint, consisting of 6 lbs. resin, ½ gal. of terebine, 5 lbs. ground cinnabar, and 100 lbs. of zinc oxide is first applied, and over this is laid an antifouling coat of 100 lbs. tallow, 25 lbs. zinc oxide, 5 lbs. ground cinnabar, and 8 lbs. arsenic, with a sufficient quantity of resin.

7223. Justice, P. M., [*Sandron, A.*]. June 13.

Preservative compositions.—In treating leather, 50 to 60 parts of essence of the white bark of the birch and 40 to 50 of oil of tallow or neats'-foot oil, thoroughly mixed, are applied in a cold state. In the case of cardboard and other substances dressed with animal size, a bath consisting of about 70 parts of the birch bark essence, 5 parts of cerosine, and 25 parts of oil of tallow, is heated to 100° C. and the cardboard &c. is steeped in it.

7498. Lake, H. H., [*Roebuck, S.*]. June 19.

Antifouling-paints; preservative compositions.—Relates to a waterproof composition consisting of 8 gals. creosote, 6 gals. coal tar, 1 gal. turpentine, and 8 ozs. plumbago. It is applied with a brush to ships' bottoms (either wooden or iron), ironwork of all kinds, brickwork, smoke stacks, gables and rears of houses, &c. When used on ironwork it is advisable to add a little lime to neutralize any acid that may be contained in the paint.

8008. Bunn, P. C. July 1.

Body colours.—A body colour is made from the waste "slimes" &c. obtained by washing lead ores, by grinding them to a paste and mixing with linseed oil or other vehicle.

8737. Lake, W. R., [*Perkins, J. P.*]. July 20.

Paints, materials for.—Silicious iron slag is ground with oil, with or without colouring or drying materials, to form a paint.

8739. Feaver, F. W., and **Feaver, J.** July 20.

Paint cans.—The invention is described with reference to cans for storing foods &c., but is applicable to paint cans. The lid, which may be soldered to the can in the usual way, is cut along the circle A, leaving only the narrow neck B uncut. The disc C thus cut out forms a lid for covering the contents while the can is in use. The lid is sealed by soldering a ring D round the circular cut as shown, and the can is opened by simply pulling this ring off, there being a projection at one end of it for the purpose. When the can is intended for

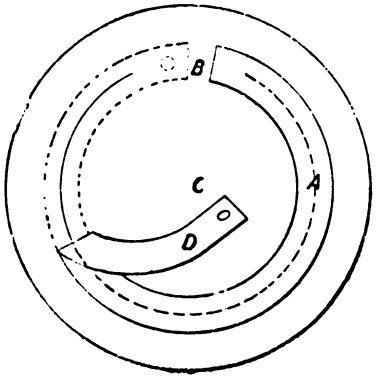

subsequent use as a paint can the lid may be dished and fitted into a corresponding aperture, and flanged to fit on a seat around the latter.

9249. Wass, A. G. Aug. 1.

Pigments.—The scum or residue obtained in boiling or filtering saccharine liquids is strongly heated until it becomes perfectly black. The operation is preferably carried on in a revolving retort or kiln or equivalent apparatus. The black substance thus formed should be cooled out of contact with air, and is employed as a body for paints.

9251. Williamson, G. H. Aug. 1.

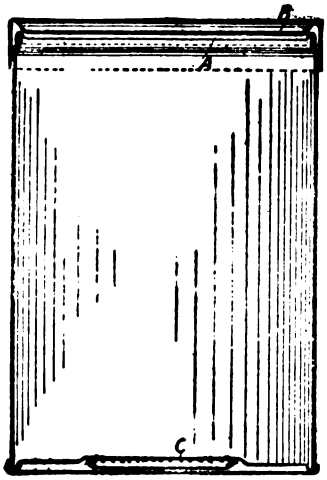

Paint cans. — Relates to airtight cans &c. for storing paint, applicable as paint cans when opened. The neck of the case or box tapers slightly, and the mouth is closed by a metallic disc A soldered thereto, the disc being preferably trough-shaped at the edge as shown. Over this

Digitized by Google

an outer lid B fits. The case is filled through an opening C in the bottom, or the opening may be in the lid A; in either case the opening is closed by soldering a disc thereto. To open the case the lid A is cut, the lid B serving afterwards as a cover while the case is in use.

9280. Thompson, W. P., [*Wellington, H.*]. Aug. 4.

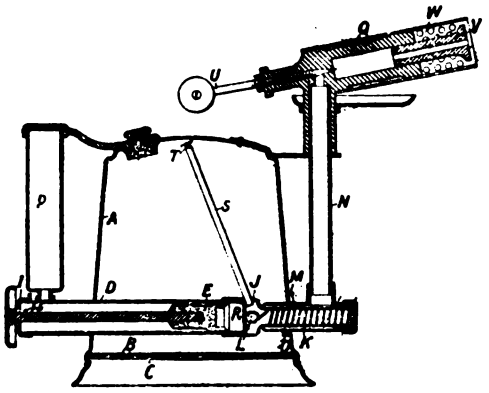

Paints, removing.—Comprises a vapour burner designed for illuminating purposes and for removing paints and varnishes. The reservoir A, which is preferably spun, is closed at the bottom by the pieces B, C, the second piece serving to stiffen the base. A cylinder D passes through the casing A and contains an elastic piston E, the small stud H upon the piston-rod corresponding to a perforation I in the cylinder. When the stud H is in the position shown in the Figure the piston-rod can be withdrawn, but by slightly rotating the rod the stud comes into contact with the casing and the rod is locked. A tubular piece J fits upon the inner extremity of the cylinder D, and contains a spring K, which presses the valve piece L upon its seat. J is enclosed by a concentric tube M which is tapped to receive the tube N, and also has a small orifice O opening into the reservoir. A light tubular handle is rigidly connected to the reservoir and to the cylinder D. The tube N, which is packed with wick, is rigidly secured to the reservoir and supports the burner Q. Air enters the cylinder D by the perforation I, passes the elastic piston, and, overcoming the resistance of the spring K, traverses the aperture R to the tube S, finally escaping by the small lateral orifice T to the top of the reservoir. This atmospheric pressure forces the oil to ascend by O to the tube N, where it is vapourized by the heat conducted from the burner Q, the conical screw plug U serving to regulate the supply of vapour. The burner Q is formed with a projecting piece V, which may be detached if desired. When a large flame is used a portion of the gas passes out around V and between it and the perforated casing W, the remainder traversing a central perforation in the piece V. When burning with a small flame all the gas passes through this central perforation, producing a narrow and pointed but intensely hot flame.

9411. Macrone, W. Aug. 7.

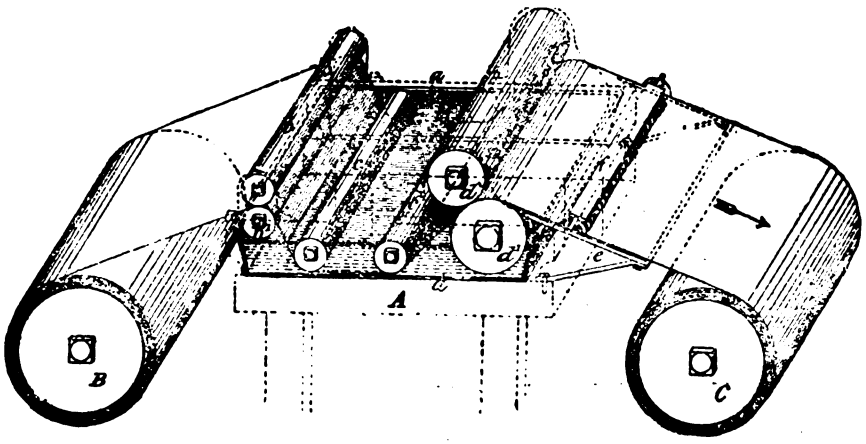

Varnishing paper or other fabrics. The paper &c. passes from the roll B, between feeding-rollers b, b^1 and through a cistern of special varnish or size a on a table or frame A, which varnish forms the subject of Specification No. 9413, A.D. 1885. After passing beneath the rollers c, c^1, which are immersed in the varnish, the paper &c. is drawn between two heated pressure rollers d, d^1, which press out the surplus varnish. It then passes over a table e, where it is dusted with powdered steatite, to set the varnish or size. A reciprocating brush f operates to brush in and clean off the steatite. The paper &c. is now collected on the drum C.

Digitized by Google

9412. Macrone, W. Aug. 7.

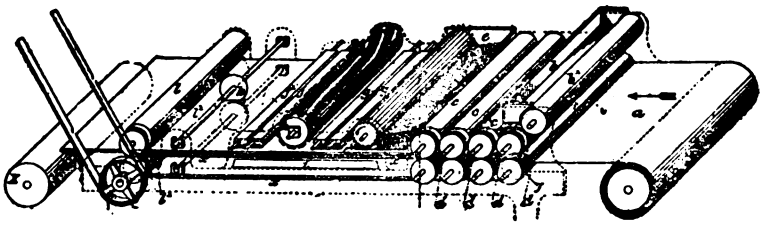

Varnishing paper and other fabrics. The paper &c. *a* is led by a gripper *t*, consisting of two inclined planes forming jaws and having hooks to catch on studs on the chain *x*, between the rollers *c*, *d* and under other rollers &c. to the winding-roller X. The varnish or size is supplied from the receptacle *b* by the rollers b^1, and the dry colours from the receptacle *e* by the fluted roller *f*. The fabric then passes under the reciprocating brushes *g*, and the rotating spiral brush *h*, which sweeps the surplus colour into the receptacle *i*. The fabric is finished by the reciprocating plush pads *j*, j^1, and cut as required by rotating cutters *k*, from which it passes between the tension rollers *l*, l^1 to the winding-roller X.

9413. Macrone, W. Aug. 7.

Varnishes; vehicles.—A mixture of 72 parts of odourless seed oil, 32 of resin, 16 of paraffin wax, 4 of beeswax, and 1 of copal varnish is used to mix with varnishes and coloured paints.

9414. Macrone, W. Aug. 7.

Pigments.—Dry colours for decorating paper and other fabrics are made by mixing aniline or other colouring-substance in water or methylated spirit with ground talc. The dyed mass is dried at a low temperature and pulverized.

9419. Harrison, T. Aug. 7.

Preservative compositions.—Coal-tar pitch (about 12 cwt.) is melted and mixed with 6 cwt. of powdered glass or fine sand, and 13 cwt. of powdered slate; the mixture is cast in sand or iron moulds. It is applied by re-melting, and is applied over black varnish to metallic or wooden surfaces.

9614. Vale, A. A., [*Chemische Fabriks Actien Gesellschaft*]. Aug. 12.

Paints, materials for.—A material suitable for use as paint is obtained from the waste acid formed by treating light tar oils with sulphuric acid. On dilution the supernatant liquid contains resinous or tarry matter which may be precipitated by further dilution and neutralization and used as paint.

9937. Pedley, G. J. Aug. 21.

Coating surfaces with liquids.—Relates to a device for spreading liquids generally. A reservoir A of some elastic material, such as gutta-percha or thin metal, carries at its widened lower end a strip of india-rubber sponge B preferably covered at the chisel edge with felt C. The pressure on the handle in using the device forces the liquid through the sponge. The reservoir is filled either at the top or by alternately compressing and releasing the pressure on the handle while the sponge is dipped in and out of the solution.

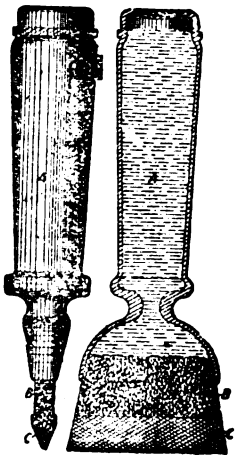

10,409. Gardner, H., [*Lublinski, D.*]. Sept. 2.

Paints, materials for; preservative compositions; varnishes.—Relates to preservative paints or compositions for impregnating wood, walls, or other materials, to prevent decay and growth of fungus, or for coating woodwork, walls, or iron constructions. The compound is formed by boiling together linseed oil, colophony, American petroleum, levigated litharge, pulverized white vitriol, pulverized potash-alum, and raw carbolic acid. After standing two days the liquid is decanted or poured off for use. Colouring-matters may be added when using as paint or varnish.

10,808. Trenemen, W. Sept. 12.

Paint vehicles.—A vehicle for grinding oil colours and holding them in suspension is made by mixing equal proportions of Canada balsam and dammar or mastic varnish.

Digitized by Google

10,838. Ward, A. J. Sept. 12.

Paints, materials for.—Powdered slate is mixed with mica (or other similar earthy matter) or clay or both. The mica which is a waste product in the manufacture of china clay may conveniently be employed. The mixture is incorporated with lead oxide. The slate may be omitted.

11,177. Imray, O., [*Behrens, E. A.*]. Sept. 19.

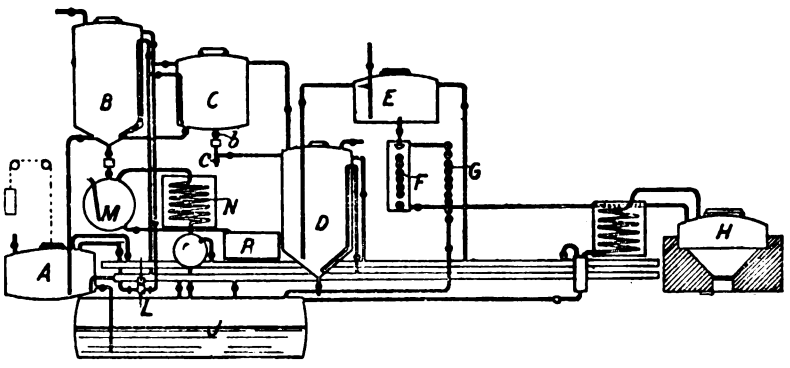

Resins and the like, bleaching and purifying. The boiler A is charged with resin and the air in it rarefied by the air pump L, which causes a supply of any suitable solvent, such as benzene, carbon bisulphide, &c., stored in the tank J to flow into the boiler A. Air is circulated by the pump L to agitate the liquid. When the resin is completely dissolved, an alkali is introduced and mixed with the solution by means of steam admitted to the boiler. The solution is then forced into the purifier B, where it is mixed with water, heated by steam, and agitated by air. The lye containing water is then run from the purifier B into the tank M, and any of the solvent carried with it is evaporated by a steam jet and condensed in the worm N, from whence it passes to the reservoir J. The lye passes on to the decomposing-vessel P, where the impure resinous parts which have been dissolved are recovered. The solution, which still remains in the purifier B, is forced into the purifier C, where it is agitated with a suitable decolourizing-agent and afterwards allowed to rest. The reagent is then drawn off through the cocks *b* and *c* and the purified solution allowed to flow into the third purifier D, where it is heated by means of steam and mixed with water by means of air. The water is then separated and the solution forced into the feeding-tank H, where it is heated to clarify it and then allowed to flow to the distilling-apparatus E, which consists of a number of pipes heated by circulating steam. The solvent is condensed in the apparatus F and conveyed back to the reservoir J. The resin which is not quite free from the solvent flows into the boiler G heated by a fire, which completely separates the solvent, the resin being then drawn off and packed. The covers over the openings in the boiler, purifier, &c. are secured with a readily-fusible alloy.

11,229. Smith, P. Sept. 22.

Painting.—Relates to a method of colouring, painting, or bronzing letters and figures in relief, by means of a roller. The apparatus consists of a box in which the colour &c. is placed, a roller B (similar to that used in letterpress printing) dipping into the colour, and a sliding plate A which by being pressed in rolling contact against the roller receives a layer of the colour. The plate and the roller are then removed, and the latter, after rubbing on the surface of the former, passed over the letters or figures in relief, thereby coating them as required. More than one roller may be employed, if desired.

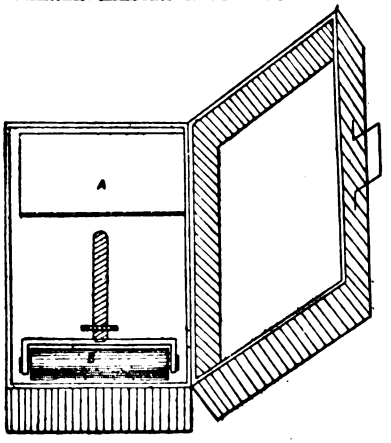

Digitized by Google

11,428. Compton, E. Sept. 25.

Paints and varnishes, removing.—Relates to a composition for removing varnish from pictures. A paste is made by mixing glycerine, citronelle, olive oil, naphtha, and lard, and applied with a brush to the surface of the painting; it is then removed, together with the varnish, by cotton-wool soaked in linseed oil.

11,529. Kitchingman, E. L., and **Andrews, A.** Sept. 28.

Antifouling-paints; preservative compositions.—The paint is particularly adapted for coating ships' bottoms, but may be used as a preservative for surfaces generally. It is manufactured as follows:—To 2½ lbs. of tar while hot, 2 lbs. of oxide of iron are added, and in the mixture is dissolved 1 oz. of resin and 2 ozs. of sugar of lead. The result is applied by a brush while hot, colouring-matter being previously added if desired. If it is more convenient to apply it cold, a sufficient quantity of shellac varnish is added to keep it liquid on cooling.

11,543. Carr, G. W., and **Dickinson, J.** Sept. 28.

Antifouling-paints; preservative composition.—The paint may be applied to a ship's bottom or any submerged structure, or to the surfaces of wood or metal structures placed underground. It is prepared in the following manner, and in about the proportions given:—100 parts of resin are dissolved in 31 of bisulphide of carbon in a closed vessel, and to the solution is added a mixture of 19 parts of colouring-matter with 18 of naphtha, together with a little powdered lime if required. The resulting compound is applied in the usual way.

12,257. Bindley, W. A., Gell, W. J., and **Boham, A. F.** Oct. 14.

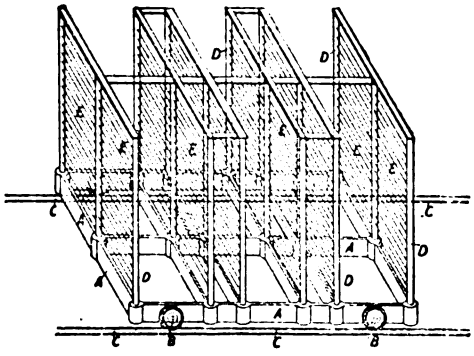

Japanning.—Relates to apparatus for stoving or drying japanned ribs or other umbrella furniture. The lower framework A of a trolley mounted on wheels B, which run on lines C, leading into the stove, carries uprights D, to which are fixed a number of tiers of horizontal rods E, upon which the japanned articles are laid, or from which they are suspended during stoving. The trolley may have an additional set of wheels to run on lines at right-angles to the former.

12,568. Lake, W. R., [*Brown, L.*]. Oct. 20.

Paints, materials for; preservative compositions; lacquers.—Magnetic iron ore (preferably "sand-" "iron-ore") is reduced to a fine powder, and employed in the manufacture of paints. Any suitable vehicle may be used, such as linseed, fish, or other oils, varnish, a mixture of soap water and glue, asphalt, bitumen, tar, &c., and the iron oxide may be previously roasted and treated with sulphuric acid; any suitable colouring-matter may be added. The paint thus formed acts as a preservative coating for wood, metals, paper, stone, fabrics, &c. upon which it forms a layer, lacquer, or coating of non-corrosive iron.

12,723. Huntington, T. C., and **Chiapponi, M.** Oct. 23.

Pigments.—Ores or compounds containing antimony are treated with sulphide of an alkali or alkaline earth (preferably barium); through the solution is passed a current of air and carbonic acid. The carbonate of the alkaline earth (if one has been used) is first precipitated; after filtration, the passage of the current is continued, and the antimony is precipitated as "hyposulphite." This precipitate is dried and used as a pigment.

13,156. Weild, E. Oct. 31. *Drawings o Specification.*

Paint vehicles.—Relates to printing coloured stripes on the selvages of fabrics, a claim being made for the mixture of the metal or pigment colours used. Gum dammar and spirits of turpentine are dissolved together, and the pigment or metal colour is added.

13,159. Pointon, J. Oct. 31.

Antifouling-paints.—The paint is intended for the bottoms of ships to prevent corrosion, and the growth of animal and vegetable life. Pulverized vitreous material, such as glass, slag, or sand, is ground with linseed or cotton-seed oil, and used for the first coat. Crude turpentine dissolved in spirits of turpentine forms the second coat, which does not dry and crack. The two compositions may be mixed and applied together.

Digitized by Google

13,328. Smith, T. Nov. 4.

Preservative compositions.—Relates to the manufacture of cement or plastic material from a mixture of about 40 parts of sulphur and 60 parts of ground refuse porcelain, earthenware, or the like. The material may be used for protecting metal and other surfaces from oxidation or decay. Fragments of earthenware &c. are thoroughly washed, fired in a retort or oven to expel moisture, and ground to a fine powder. The sulphur is then melted, and the powder mixed with it by means of any convenient stirring-apparatus, heat being applied until the mixture becomes a thick plastic mass. The stirring is continued until the substance has slightly cooled, when it becomes liquid and is poured out upon a flat surface to cool. When set, the slab is broken into pieces and re-melted. It is then ready for use.

13,396. Jackson, E. Nov. 5.

Antifouling-paints.—The essential ingredient is some finely-ground insoluble silicate, such as pumice stone or china clay. A suitable paint may be made as follows :—A quantity of shellac is dissolved in methylated spirit by heating, and about 8 per cent. of the silicate added. Colouring-matter, arsenic, oil, and resin are then added in suitable proportions, after which the mixture is allowed to cool, when it is ready for use.

13,891. Freeman, J. B. Nov. 13.

Pigments.—Consists of a white pigment which is an improvement on the pigment described in Specification No. 4879, A.D. 1882. A mixture of 5 parts of lead sulphate, 1 part of barium sulphate, and 2 parts of "zinc white" is ground dry under an edge-runner. The last ingredient may be either oxide or sulphide, or a mixture of the two. The lead sulphate may be made by acting with sulphuric acid on lead acetate obtained by exposing flakes of the metal to the action of dilute acetic acid and of atmospheric air alternately.

14,128. Spence, J. B. Nov. 18.

Paints, materials for.—A mixture of zinc sulphide and barium sulphate or carbonate, to serve as the body or base for paints, is made by dissolving zinc in alkali (sometimes by the aid of electrolytic action) and adding barium sulphide and sulphuric or carbonic acid.

15,195. Coldwell, E. Dec. 11.

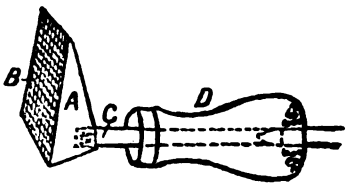

Paints, removing.—A copper box A is provided with a grated cover B and a small hole at the back through which passes the tube of a Bunsen or other burner C, round which a handle D may be attached. The apparatus is applied to the surface of the paint to be removed in the manner of an ordinary paint burner; the grating B may sometimes be dispensed with.

15,231. Blenkinsop, J. Dec. 11.

Anticorrosive-paints.—A paint composed of finely-divided zinc in a suitable medium is applied to the bottoms of iron ships previous to the anti-fouling-paint, to prevent the galvanic action which sometimes sets in between the vessel's plating and the materials commonly used in such paints. A suitable composition may be made as follows :—One cwt. of resin is melted in a copper, and to it when cool are added eight gallons of naphtha and one gallon each of pine varnish and boiled linseed oil. Three pounds of zinc dust and one and a half of zinc oxide are then ground with half a gallon of the varnish made as described above, and to the mixture a further quantity of the varnish and of naphtha are added to make one gallon of paint, which is applied in the usual manner.

15,948. Candy, F. Dec. 28.

Pigments.—The dark-coloured carbonaceous clay found near the beds of potters' clay in the district of Marland, near Torrington, Devonshire, is pulverized, dried, and carbonized either alone or mixed with chalk or ordinary limestone. The products thus obtained are used, alone or in conjunction with other substances, for making paints. They may be ground with oil, or with sodium silicate to form a fireproof paint. The tint may be varied by regulating the supply of air during the carbonization.

Digitized by Google

A.D. 1886.

78. Watkins, C. A. Jan. 2.

Graining-tools.—The feed brush A is fixed to the handle of the tool C by a metal blade *a* passing between the two parts of the handle, and with a ⊥-shaped flange forming a stop.

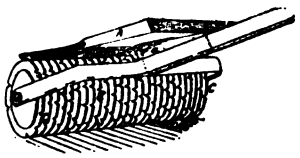

For graining corners and sides of panels &c., a tool with a metal roller having longitudinal ribs, and fed by an india-rubber cylinder, is employed.

---

606. Rousset, C. F. Jan. 14.

Varnishes.—Relates to a varnish for use in fixing lithographic or other transfers. The varnish is composed of heavy benzene and Judæa bitumen, with or without a small quantity of essence of copaiva.

1086. Wendling, F. Jan. 25.

Paints, materials for; painting.—A mixture is made of the following ingredients:—Potassium or sodium silicate 30 parts, calcium fluoride 15 to 25, cryolite 10, marble or magnesium silicate 10 to 15, calcium carbonate 15 to 20, and calcium phosphate 10; and added to paints in the proportions of about 100 of paint to 200 of the mixture; the whole is then formed into a paste with caustic potash. After application the paint is hardened by washing with a solution of an alkaline silicate.

1511. McClave, E. W. Feb. 2. *Drawings to Specification.*

Paints, materials for; varnishes.—The pitchy residue remaining in the retort after distilling wood to obtain turpentine is employed in making paints or varnishes.

2310. Swan, D. Feb. 17.

Pigments. — A solution of ferrous chloride, either obtained as a bye-product in any manufacture or specially prepared, is mixed with a lime or other alkaline-earth carbonate in a powdered condition, and the whole aërated and agitated either by paddles or similar contrivances, or by forcing in air, or by both these methods combined. A solution of calcium &c. chloride, and a yellow to orange precipitate suitable for use as a pigment, are obtained; the latter may be changed to a red pigment by simply calcining.

2439. Danchell, F. H. Feb. 19.

Paints, materials for; varnishes.—Carbonized sewage sludge, which may have been mixed with various waste substances or with animal charcoal treated with sulphuric acid, is used for deodorizing, decolourizing, and clarifying semi-liquids, such as syrups, varnishes, and the like. When finely ground and washed the sludge may be used as a material for paint and the like.

2616. Haddan, H. J., [*United States Waterproofing Fibre Co.*]. Feb. 23.

Preservative compositions.—Relates to a composition for treating ropes, fabrics, nets, &c., consisting of resin and paraffin wax mixed together by the aid of heat and then thinned with benzene. When treating fish nets and seines, the residue from the distillation of crude mineral oil is added to the composition, with or without lampblack to colour the same. In some cases paraffin oil may be substituted for the wax and turpentine for the benzene.

2878. Clark, A. M., [*Wirth & Co.* acting for *Müller-Jacobs, A.*]. Feb. 27.

Pigments; varnishes; resinous compounds.—Relates to the preparation of colouring-composition in the form of a powder soluble in benzene, chloroform, bisulphide of carbon, and oils; and consists of a combination of a resinate of a metal with a colouring-matter. The resinate is obtained as a powder by treating a neutral resin soap with sulphate of zinc or of alumina, or other metallic salt. The colouring-matter, preferably an aniline colour, is added to the powder as an aqueous or alcoholic solution. Or the solution of the colouring-matter may be added to the soap solution, or to the

Digitized by Google

metallic salt solution, before mixing these solutions to precipitate the metallic resinate. The compound obtained is soluble in the bodies above-mentioned and may be used for coloured varnishes, pigments, and other purposes in the arts.

3572. Thompson, W. P., [*Pond, J. A.*]. March 13. *Drawings to Specification.*

Coating surfaces.—Relates to the coating or "enamelling" of wood, paper, cloth, papier mâché, and other fibrous or porous materials. The principal object is to provide a cheap form of impervious packing-material for edible substances &c. which will not impart any flavour to the substance packed; the coating serves also as a preservative, and as a water, grease, and acid proof covering, and to give an improved appearance to the surface. The coating consists of shellac, to which may be added 2 to 6 per cent. of beeswax, stearic acid, or other fatty acid; it is applied to the paper &c. by passing the latter between pressure rollers, the lower of which is supplied with the coating-substance and heated to 230-300° F. by internal gas jets &c. The coated material may be polished by being passed through another pair of heated rollers, or by applying rapidly-revolving heated metal discs to the coated surface.

3636. Ireland, A. C., and **Bowbeer, J. R.** March 15.

Antifouling-paints. — The active ingredient is sulphate of copper, which is ground up in oil with carbonate of lime to prevent deleterious action on the vessel's plating, oxide of iron to give body, and blacklead to give a smooth surface. The following have been found to be suitable proportions:—Sulphate of copper 35, oxide of iron 40, blacklead 15, and carbonate of lime 10; a sufficient quantity of oil is added to give a consistency suitable for easy application.

3663. Pitt, S., [*Hart, C.*]. March 15.

Paints, fireproof; varnishes; preservative compositions. — Relates to compositions for rendering substances non-combustible, which consist of glycerine, soluble cream of tartar, tartaric acid, oxalate of potash, or lactic acid combined with phosphates, borates, tungstates, silicates, and other similar salts, to which are added ammoniacal salts, sulphates, hydrochlorates, carbonates, &c. to produce a fire-extinguishing gas. The proportions in the mixture are, say, glycerine, 2 parts; cream of tartar, 8; sulphate of ammonia, 8; carbonate of ammonia, 40; and river water in sufficient quantity to effect solution. Gelatinous, glutinous, albuminous, oleaginous, bituminous, resinous, &c. substances are added to form incombustible glazes, paints, varnishes, &c.

4225. Ryles, A. E. March 25.

Painting carriages and other vehicles. The carriage is first heated in a stove for about six hours to dry it at a temperature not exceeding 280° F. Each successive coat of paint or varnish is dried and hardened by stove heat at 180° F. applied for about six hours.

4522. Squire, W. S. March 31.

Pigments.—The spent liquid from batteries of the Lalande type, consisting of an alkaline zincate, is treated by the following process:—Sulphuretted hydrogen or an alkaline sulphide is added, precipitating an impure zinc sulphide and leaving the alkali; the zinc sulphide is dissolved in acid to form any suitable salt of zinc, to which barium sulphide is added to form a pigment.

4625. Harrison, T. B. April 2.

Washes. — A mixture in the proportions of 15 cwt. soap leys, 1 cwt. silicated soap, 2 cwt. Stockholm tar, 1 cwt. caustic soda, ¾ cwt. sal ammoniac, 14 lbs. Irish moss, and 14 lbs. white tallow is employed as a wash for preparing wood &c. for re-painting.

4737. Liebhaber, G. J. C. M., Baron de. April 5.

Paints and varnishes, removing; washes.—By adding quicklime to solutions of alkalies or alkaline salts, or monohydrated lime to the dry salts, caustic powders are obtained suitable for removing paint and other deposits or as a wash. Equal parts of caustic soda solution at 32° Bé. and quicklime give a caustic powder; the lime gradually takes up the water and the whole mass solidifies; the action requires heat to start it but continues of itself. Alkaline carbonates, oxalates, hypochlorites, or cyanides may also be employed, and a small proportion of chalk is sometimes added to the lime.

4750. Hall, J. W., [*Lewis, G. T.*]. April 5.

Pigments. — For obtaining "white pigment" lead ore, or mixed lead and zinc ores, are roasted and the fumes collected in bags of flannel or other fabric. The roasted mass and the condensed fumes are then treated in a low cupola furnace with non-bituminous fuel, and "white pigment" is collected and condensed in bags.

Digitized by Google

4856. Burdock, W. H. April 7.

Paints and varnishes, removing, burners for. The burner consists of a globular chamber S, having an opening *s* in the front and filled with cotton-waste moistened with spirit &c. Air enters through a tube T in the handle *t* by a small hole *u* near the upper part of the globe S. A flexible tube is attached to the nozzle $t^{\times}$, and conveys the air from a reservoir filled by an air pump worked by hand, or a bellows worked by the foot of the operator.

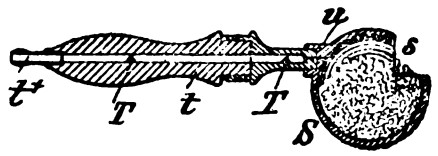

4965. Palmer, E. J. April 9.

Coating surfaces with liquids.—The invention is described in connection with apparatus for applying photographic emulsions, but is stated to be also applicable for other like purposes. Relates to the invention described in Specification No. 3185, A D. 1885. The flow of emulsion from the reservoir is regulated by gradually enlarging the outlet by the descent of a float acting through levers as the level of the emulsion falls. To secure a more regular distribution of the emulsion, the distributer is provided with an adjustable gate which can be set to regulate the flow of emulsion as desired. A short lever attached to a rod which raises the gate is raised by the bridges on the belt which carries the plates. The plates are carried on a pitch chain consisting of short square links connected by flat plates with hooked ends. The Figure shows an automatic contrivance for placing the plates in the rack. A is the pitch chain, passing over the pulley B. The plate A^1 passes down the inclined plane C into one of the compartments of the rack D. By the action of the studs H on the lever I the detent K is lifted, and the wheel G turns round and allows the rack D to descend into a position ready to receive the next plate. The hand distributer described in the previous Specification is provided with an arrangement for lifting the tube to any extent.

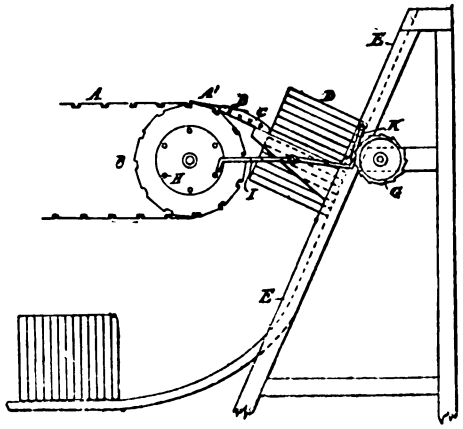

5270. Melvin, J. B. April 15.

Resinous compounds; varnishes.— Relates to a process for treating resinous substances so as to give greater hardness and a higher melting-point, and enable them to be used in place of more costly gums, and especially in place of copal &c. for making varnishes. Resin or balsam or the like is melted in an open or closed vessel, and at about 230° F. a proportion, varying according to the hardness required, of oxide of zinc, lead, iron, or manganese is stirred in, and the temperature increased to about 360° F. and maintained at that point until the mass becomes nearly or quite hard. Preferably the temperature is then further increased until the compound has become thoroughly fluid, so as to improve the condition on cooling. The products may be combined with coal tar or the like for many purposes.

5413. Roese, E. April 19.

Coating surfaces, compositions for.—The object is to provide billiard balls and surfaces of wood, metal, &c. with a durable coating capable of receiving a polish. The balls &c. are first covered with an alcoholic solution of copal varnish, and then are coated with a mixture consisting of an alcoholic solution of copal varnish, a solution of celluloid in ether and alcohol, and collodion, with or without the addition of colouring-matter.

5598. Crookes, H. April 22.

Paints changing colour when heated.—The double iodide of mercury and potassium is first prepared, by adding mercuric chloride to a solution of potassium iodide, as long as the precipitate of mercuric iodide redissolves in the excess of potassium iodide.

Digitized by Google

The solution is then heated with a solution of copper sulphate, and boiled to expel the iodine which is liberated; the iodide of mercury and copper is filtered off and dried and powdered, and then mixed with oil and turpentine to form a paint. The paint is red at ordinary temperatures, but when heated to 110° F. it darkens until at 140° F. it becomes dark brown. The paint may be applied to bearings to indicate whether the bearing is running cool or heating; it may also be applied to the handles of flat-irons, saucepans, &c. to show if they are too hot to take hold of. If a coil of wire through which an electric current passes be covered with the paint, the change in colour will serve to indicate whenever the current exceeds a certain maximum, depending on the nature of the coil. The coils of dynamos may also be coated with the paint.

6413. Johnson, J. H., [*Badische Anilin and Soda Fabrik*]. May 12.

Pigments.— Relates to the preparation from gallic acid of a colouring-matter, called "gallo-"flavine," which is suitable for dyeing and printing. A solution of gallic acid, preferably in alcohol or methylated spirits, is mixed, with constant agitation, at a temperature not exceeding 10° C., with caustic potash in the proportion of two or three molecules of caustic alkali to one molecule of gallic acid. The alkaline solution is then exposed in any suitable apparatus to the action of oxygen or air, the temperature being maintained below 10° C., and the oxidation is rendered evident by olive or brownish-green colour assumed by the solution. A low temperature is employed to prevent too destructive oxidation, and the solution in alcohol serves the same purpose, since the colouring-matter produced is insoluble therein. Samples of the solution are filtered at intervals and examined after a time to see whether a precipitate insoluble in muriatic acid continues to form; when precipitation ceases the oxidation should be stopped immediately. The crystalline pulp obtained is filtered, pressed, dissolved in warm water, and boiled with a slight excess of hydrochloric or sulphuric acid until the flocculent precipitate becomes crystalline. The colouring-matter is then dried or prepared as a paste. "Galloflavine" forms yellow lakes or pigment colours with metallic oxides. It may be fixed on fabrics by mordants in the same way as artificial alizarine is fixed.

7497. Cameron, J. June 4.

Antifouling-paints.—Carbolates or sulpho-carbolates are mixed with the materials usually employed in the manufacture of paints, in proportions varying with the special circumstances. Usually a carbolate of a common metal such as mercury, iron, copper, or zinc is mixed with an equal quantity of carbolate of an earth metal such as barium and the result added in the proportion of 14 lbs. to each hundredweight of paint. The carbolates may be prepared in any way, a convenient one being to add a solution of the metal to a solution of carbolate of soda, whereupon the carbolate of the required metal is precipitated, and is then aired ready for use.

7777. Briggs, W. June 10.

Preservative compositions; varnishes. — In preserving iron and steel structures, the latter are cleaned and varnished, and, while the surface is still sticky, coated with layers of hot coal-tar pitch. The varnish consists of a mixture of coal-tar pitch, tar oil, and coal-tar naphtha.

7903. Wise, W. L., [*Mourlot, E.*]. June 12.

Preservative compositions; varnishes.—The heavy oils obtained in the distillation of birch-bark are subjected to a further distillation by which an essential oil and a tarry residue are produced. The tarry substance is useful as the basis of a preservative composition. If the distillation of the oils is stopped before all the essential oil is driven off, a pasty substance is obtained, useful as a varnish.

7927. Clark, A. M., [*Audouard, L. P.*]. June 12.

Preserving fibrous materials. All kinds of woven and felted fabrics and fibrous or filamentous materials are treated by fumigation with wood smoke, to produce non-putrefactive and non-absorbent materials.

8442. Greening, F. June 26.

Varnishes; paint vehicles; preservative compositions.—Relates to a composition that can be used as, or in the production of, a varnish or coating for protecting oil or watercolour paintings, for coating and preserving eggs, or as a substitute for oil in mixing colours. The composition is prepared by treating rags or other suitable fibrous material with sulphuric acid and nitrate of potash (at a temperature of 75° to 90° F.) until the fibre is completely converted. The fibre is then freed from excess of the mixture, and is treated with a bath of liquid or gaseous carbonic-acid gas "for "neutralizing or counteracting the effect of any "trace of free acid remaining." The converted fibre is dissolved in a specially-prepared solvent containing methylated alcohol, resin, gum benzoin,

Digitized by Google

and castor oil. When used as a varnish or preservative coating a thin solution is used. The residue from the first distillation in preparing the solvent, when mixed with the composition and thinned with the solvent, is used as a protective composition.

8446. Oliver, T. U. June 26.

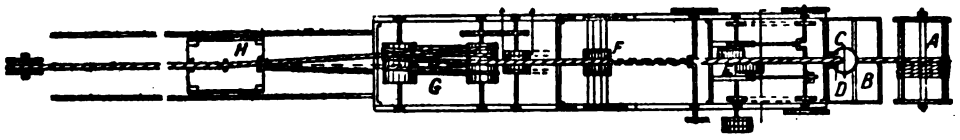

Painting and varnishing.—Relates to a machine for coating ropes with paint, varnish, tar, enamel, oil, or other preservative substances. The rope to be coated is delivered, from the drum A, under a roller in the vessel B containing the liquid, and is then drawn successively between the stationary brushes C, over a roller D, between brushes E reciprocated longitudinally by connection with cranks, between fixed brushes F, and over drums G to the drawing-carriage H. It is then dried in a heated room.

9027. Schaal, E. July 10.

Resinous compounds; varnishes; lacquers.—The resin-acid esters are prepared by heating resin-acids, with alcohols, phenols, naphthols, oxyphenols, hydrocarbons, glycerine, &c. either with or without pressure, or the addition of substances that assist the reaction, and by allowing the evolved steam to escape or by carrying it off by means of a current of inert gas. Particular directions are given for the different cases. The esters formed are separated by distillation *in vacuo* into soft and hard esters, which may then be employed with volatile or fatty oils, hydrocarbons, or alcohols to form varnishes or lacquers; or the esters may be used directly as resin or gum substitutes. They all possess the common property, which is opposed to that of most natural resins, of being insoluble in sodium carbonate.

9176. Bouillet, L. J. B. A. J. July 14.

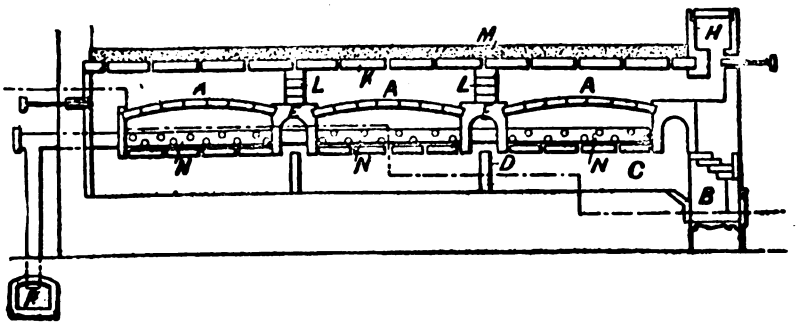

Pigments.—Relates to the manufacture of ultramarine. The materials are moulded into a brick-like form in packets of paper highly charged with mineral matter, and then placed by a special carrier in rows in muffles. The Figure shows three muffles A, A, A heated by a furnace B. The heated gases pass through the flue C under the muffles, and are then deflected by partitions D into the hollow arches E between the muffles, and so round the end of the third muffle, and over the muffles to the chimney H. The roof K is made of thin firebricks supported by T-shaped iron bars on the walls L, and is covered by sand M. Through the muffles runs a perforated pipe N which carries off the sulphurous and other vapours to a special receptacle P. During cooling, oxygen gas is introduced through sight-holes in the bricked-up ends of A, A, A.

Digitized by Google

9489. Crawford, J., and **Crawford, J.** July 22.

Painting.—Relates to apparatus for sifting and distributing powders, which is especially applicable for supplying coloured powders in a uniform cloud or smoke-like condition, to cotton or other fibrous materials, but is applicable also for other purposes. The sifting-apparatus consists of an annular sieve 18 within a casing 17 fixed to a spur-wheel 16, which is slowly rotated by a pinion 29 on the shaft 30, driven from the main shaft 10 by bevels 12 and 31; upon the sieve are two brushes 19 mounted loosely on a shaft 20 fixed to a stationary vertical shaft 21, the height of which is adjustable by the pin 23 and nuts 24. To the brushes are fixed bevels 25 which gear with a bevel 26 on the shaft 27 driven from the main shaft 10 by the bevels 13 and 28. The hopper 32, into which the powder to be treated is supplied, is provided with a stirring rod and blade 33 and 36, an aperture in the bottom, and a rotating slotted plate 37 admitting uniform quantities of powder to a shoot 38 discharging upon the sieve 18. The sifted material is conducted by the passage 39 and 40 to a long trough beneath which rotates a roller covered with wire card cloth. A plate adjustable by screws ensures the removal of a uniform quantity of powder by the roller, and a circular brush rapidly rotated removes the powder from the roller and distributes it as a cloud which falls upon the material travelling beneath.

FIG. 1.

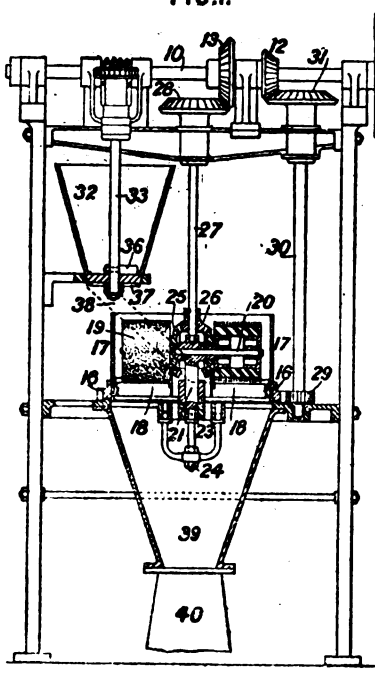

FIG. 2.

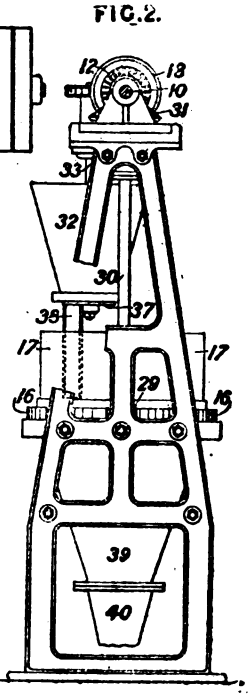

9581. Hannay, J. B., and **Pape, H. J.** July 24.

Pigments.—The pigment obtained as described in Specification No. 13,492, A.D. 1884, and consisting of lead chlorosulphite &c., is mixed with zinc oxide in the proportion of 70 to 85 per cent. to 30 to 15 of the oxide.

9992. Wass, A. G. Aug. 4.

Paints, materials for.—Lime or other calcareous substance that has been used for filtering sugar, or has otherwise become charged with saccharine matter, is calcined in a revolving or similar retort to about 900° F. The resulting product is preferably cooled out of contact with air, and may be employed in the manufacture of paints.

10,298. Lyte, F. M. Aug. 11.

Pigments.—Basic lead sulphate or chloride, or other normal or partly basic insoluble or sparingly soluble lead salts, is or are obtained by digesting the normal salt with a solution of a soluble basic lead salt, such as the acetate, and employed as a pigment.

10,482. Kiessling, N. Aug. 16.

Paint vehicles.—In decorating china, stoneware, and the like by transfer prints, the vehicle for the colours is formed by boiling pure linseed oil varnish with turnip-seed oil.

10,828. Lake, W. R., [*Orlay, C.*]. Aug. 24.

Preservative compositions.—A composition of paraffin, wax, and vaseline is used as a protective covering for metallic surfaces.

Digitized by Google

10,960. Benedictus, M. Aug. 27.

Paints, removing.—A paste of the following ingredients is employed:—Water 23 parts, meal or flour 4, borax or alum 1, black soap 4, and mixed caustic soda and potash 11.

11,493. McLean, A., and Smith, R. Sept. 9.

Paint vehicles.—Aniline colours are fixed by mixing them with substances containing little or no oxygen. The vehicle described consists of fusel oil, alcohol, "Swedish pitch," asphaltum or tar, and resin or gum.

11,889. Lyte, F. M. Sept. 18.

Pigments.—The process for the manufacture of basic lead salts for pigments described in Specification No. 10,298, A.D. 1886, is modified as follows:—To, say, 100 gallons of basic lead-acetate solution of specific gravity about 1·315, is added sulphuric acid until the solution is just acid; the precipitate is then digested with a further quantity of the basic lead acetate. According to the Provisional Specification, pigments obtained by these processes are densified by combined pressure and friction.

12,203. Astfalck, C. Sept. 25. *Drawings to Specification.*

Pigments or marking-compositions.—Relates to compounds for marking boxes, casks, sacks, oil-cloths, covers for coaches, &c. A mixture of various kinds of graphite and soot is pressed into bricks or cakes and packed in wedge-shaped boxes for use with a wet brush or with turpentine or oil. A suitable compound is made by incorporating 80 per cent. of black graphite and 20 per cent. of viscous graphite, and then mixing with about 9 per cent. of soot and 6 to 12 per cent. of water.

12,413. Boult, W. C., and Ryan, F. J. Sept. 30.

Polishing-liquids.—A liquid suitable for polishing metals is formed by mixing together water, sulphuric acid, and rottenstone.

12,499. Hannay, J. B. Oct. 2.

Antifouling-paints.—Paints for ships' bottoms are formed of metallic zinc, a basic metallic oxide, and a coating-medium. Suitable quantities are,—linseed oil 20, resin 23, mineral naphtha 24, powdered zinc 10, and basic oxide 23. Mixtures of two oxides, such as zinc oxide and magnesia, may sometimes be used. In some cases about 10 per cent. of mercuric oxide may be added.

12,741. Smith, G. J. Oct. 6.

Varnishes for coating fuzes. To render the coatings of fuzes incombustible, they are varnished with a mixture of borax, glue, china clay, and water. Tungstate of soda or silicate of alumina may be substituted for the borax. The tape forming the coating may be impregnated with ammonium sulphate before being used. The varnished fuzes may be finally drawn through flocculent asbestos.

13,416. Hannay, J. B. Oct. 21.

Pigments.—Lead sulphate, suitable for use as a white pigment, is obtained from ores, slags, waste or impure sulphate, &c. by first treating with coke and a suitable flux in a furnace, and, if required, adding sulphur thereto. The crude lead sulphate is then washed and dried, but if it contains any insufficiently-oxidized compound, it is first treated with a powerful oxidizing-agent, such as "aqua "regia," and afterwards washed with dilute alkali to free from acid. The resulting lead sulphate may be mixed with zinc oxide and used as a pigment.

13,799. Gard, W. G. Oct. 27.

Paints, materials for.—In preparing a solution for preventing the formation of scale in steam boilers, leather scrap are boiled in a soda solution. The residue of leather scrap is further boiled with soda solution until a fine pulp is formed which, with the addition of ferric sulphate, forms a base from which paint may be manufactured.

14,046. Walton, F. Nov. 1. *Drawings to Specification.*

Polishing, French and like; polishing-liquids.—For giving moulded boxes &c. a polished surface, they are put in a revolving cylinder, and polished by friction one against the other. Revolving brushes may be used to assist the action. After a short time a polishing-liquid, such as a composition of paraffin wax, resin, and linseed or rape oil, may be added.

Digitized by Google

14,899. Gare, T. Nov. 17.

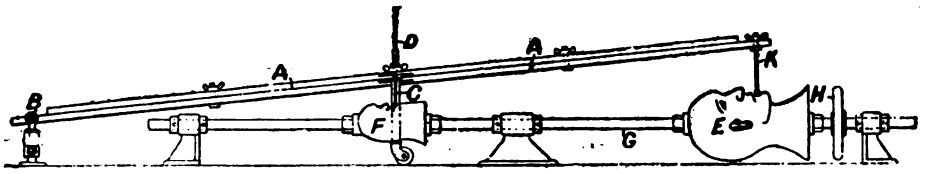

Painting.—Relates to pantograph apparatus for copying designs in colour, cutting materials, profiling sculpture, &c., and consists in substituting for the ordinary pen or pencil of a pantograph, a special form of pen (capable of holding several colours to be used together or successively), a rotary tool, or tool with chisel movement, &c. In the Figure the apparatus is shown as arranged for profiling sculpture. A is a pantograph which can, in addition to its usual movement, be moved vertically about the hinge B; the pen is replaced by a rotary tool C driven by a flexible shaft D. The model E and the block F on which the model is to be reproduced are fixed on a shaft G, which can be turned by the hand-wheel H. The tracer K is moved over the model E, and the rotary tool C copies the outline in the block F; by turning the shaft H slowly the entire block may be carved. In the case of colour, a bottle is used having a number of radial compartments, each holding a different kind of colour. The liquid or powdered colour, sand, &c., may be applied by an air blast.

15,011. Duncan, D. J. R., and **Mylne, H. C.** Nov. 18. *Drawings to Specification.*

Preservative compositions for coating water pipes. The compound consists of resin, pitch, tar, powdered chalk, boiled linseed oil, and petroleum. The mixture is kept fluid by a furnace.

15,363. Stewart, D. Nov. 25.

Paints, materials for.—A grey or black colour, for use with textile fabrics in printing or colouring operations, is obtained by calcining kieselgühr, sometimes mixed with carbonaceous matter.

15,561. Carter, W. Nov. 29.

Antifouling compositions and paints.—A priming-coat composed as follows is first applied:—20 lbs. of zinc and 6 lbs. of Turkey red are mixed with 32 lbs. of boiled oil, and, while hot, 39 lbs. of dissolved resin are added. After cooling, 15 lbs. of mineral turpentine are thoroughly mixed with the foregoing, and the resulting paint is then ready for application. The antifouling coat consists of 20 lbs. of Turkey red and 10 lbs. of mineral green, which are, while hot, mixed with 27 lbs. of boiled oil and 30 lbs. of dissolved resin, and, after cooling, with 25 lbs. of mineral turpentine, some inactive colouring-matter being added if desired.

15,685. Cunliffe, H., and **Condon, M.** Dec. 1.

Varnishes for use in fixing printing-ink. The following ingredients are given as a suitable varnish:—2 lbs. of pale hard copal, 1 pint of boiled linseed oil, and 3 pints of "spirit of "turpentine."

16,522. Grellmann, C. O. G. Dec. 16.

Painting.—Relates to apparatus for painting or drawing straight or curved lines on walls, ceilings, &c. The Figure shows a longitudinal view; *a* is a long arm or bar to which are attached two or more cross-bars *d*, *g* by movable sockets *e*, *f* with adjusting-screws; *c*, *n* are guide-wheels. On the bar *g* is fixed a box *h* containing the paint, in which rotates the brush *i* having bristles on its periphery, and driven by the wheels k^1, k^2, l^1, l^2. The point *o* on the arm *d* is employed when circles are to be described.

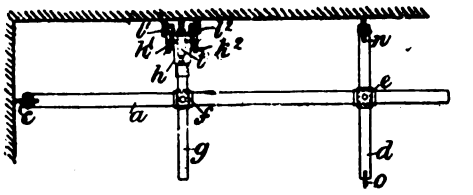

Digitized by Google

16,761. Gray, R. R. Dec. 21.

Paint and like cans.—Relates to a metallic keg or vessel for shipping or transporting paint, lard, &c., and the object is to construct it so that it may, when emptied, be utilized as a painters' can &c. Lugs B are left on the top edge of the vessel to turn over and secure the lid C, and plates E are fixed to the sides and punched to receive the ends of a handle A when the vessel is required for use as a bucket.

(*For Drawing see next column.*)

16,761.

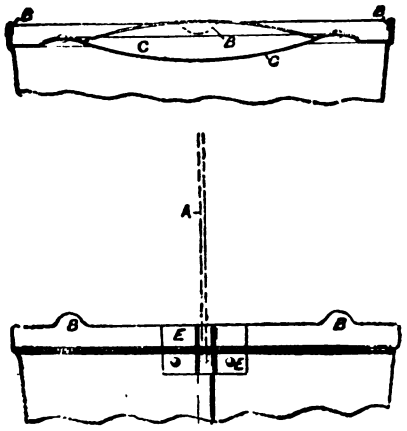

16,935. Pass, E. de, [*Soc. Industrielle et Commerciale des Metaux*]. Dec. 24.

Preservative compositions for copper or copper-alloy surfaces. Sulphocyanate or cyanate of copper is mixed with a solution of caoutchouc or similar substance and applied to the surface to be protected. Cupric or cuprous salts may be used.

A.D. 1887.

11. Challoner, S. Jan. 1.

Preservative compositions for protecting gilt or metal surfaces. The metal surfaces are first coated with a solution of gelatine and water-glass, and afterwards, before becoming quite dry, with a solution of copal in methylated alcohol, to which may be added ground glass, colouring-matter, and water-glass. The article is then dried in the open air or in a stove. Both of the above operations may be performed at once by the use of an emulsion prepared from all of the above substances.

120. Turner, W. H. Jan. 4.

Paint vehicles.—A vehicle for colours for printing pottery transfers is made by adding 1 lb. of tar to 1 lb. of oil and boiling together for half an hour, and then adding ¼ lb. of white lead and a little sugar and boiling for several hours. The colour is finely ground and sifted and mixed with the boiling vehicle by hollow heated granite cylinders.

383. Pont, A. de. Jan. 10.

Polishing, French and like. — Consists in a process for imparting a polished, glazed, or enamelled surface to articles made of bone, horn, ivory, wood, papier mâché, cardboard, paper, leather, and other similar substances. The surface is washed or scoured, if necessary, with a solution of washing-soda to remove grease, and the material is then bleached by means of oxygenated water or chloride of lime. It is then dried, gently heated to about 80° F. or 90° F. and coated or primed with an adhesive consisting of a solution of albumen, isinglass, glue, gum animi, or copal. When thoroughly dried the primed surface is evenly coated with an alcoholic solution of a resinous material such as gum lac, gum animi, or

Digitized by Google

celloidin, coloured as desired by means of an aniline dye, or for a white surface by means of zinc oxide, precipitated chalk, or oxide of silver. The material is again thoroughly dried and one or more additional coats of the same material may be applied, or in place of this, when gum lac or celloidin have been used for the previous coatings, a solution of gum animi, or collodion to which has been added from 2 to 10 per cent. of celloidin is used. The surface is polished first with tripoli, then with powdered pumice, and then with "Vienna chalk," being finished by wiping over with prepared chalk suspended in ammonia, the dry deposited chalk being afterwards rubbed off the surface with a very fine piece of silk.

---

955. Gunn, H. H. Jan. 21.

Pigments.—In making zinc-sulphide pigment the crude ore of zinc, preferably the sulphide, is ground, and then gently roasted to convert as much of the zinc as possible into sulphate, adding a small amount of finely-ground iron pyrites at the end of the operation to complete the conversion. The product is withdrawn, mixed with a small quantity of sulphuric acid, and then water is added and the whole heated to obtain the sulphate in solution. The clear liquor is siphoned off, and, after a slight addition of acid, granulated zinc is introduced, whereby any lead, tin, cadmium, bismuth, silver, arsenic, copper, and antimony which are present, are precipitated. Bleaching-powder is added to the clear solution obtained to precipitate any iron that may be present, which is filtered off, and a solution of barium sulphide added to the solution until a precipitate ceases to fall. This precipitate is an intimate mixture of zinc sulphide and barium sulphate, and after filtering is pressed, dried, and roasted &c. for use as a pigment. During the roasting sulphur dioxide is passed over the pigment to prevent oxidation. The barium-sulphide solution employed for precipitating must be free from caustic baryta, which result may be secured by passing sulphuretted hydrogen, or adding hydrochloric acid to the solution.

1033. Sugden, S. S. Jan. 22.

Pigments.—Fats are decomposed by litharge, or a mixture of litharge and granulated lead; the solution is freed from lead by sulphuretted hydrogen, and concentrated for glycerine; the lead soap is decomposed by alkali, producing a hard or soft soap and a precipitate which may be used as a pigment.

1057. Hunt, R., and **Wilson, H. S.** Jan. 24.

Resins and resinous compounds.—Relates to the extraction of resinous matter from cotton-seed. The cotton-seed is first subjected to a heat of 200–300° F., which has the effect of hardening the corpuscles of resinous matter. It is then decorticated and reduced; the resin may be separated by sifting &c. and employed for dyes &c., and the meal employed for the extraction of oil and manufacture of oilcake in the ordinary manner.

1199. Nicoll, D. Jan. 25. *Drawings to Specification.*

Preservative compositions.—For protecting iron or wood from rust or decay, a mixture of Trinidad pitch, cotton foots pitch, tar, and sand is employed.

1569. Snyder, F. H. Feb. 1. *Drawings to Specification.*

Pigments; antifouling-paints.—The carbon from gas retorts is finely powdered and specially treated for purification and separation, and may be used as a pigment or antifouling-paint.

1981. Howell, J. A. Feb. 8.

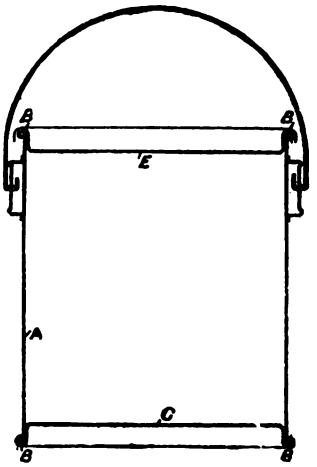

Paint and like cans.—The ends B of the body A are wired. The base C and cover E of the can are dished; the base C is bent round the lower wired edge and soldered. The cover E, after the vessel is filled, is secured in the same way. A wire handle as shown may be provided.

2080. Linzell, J. J. Feb. 10.

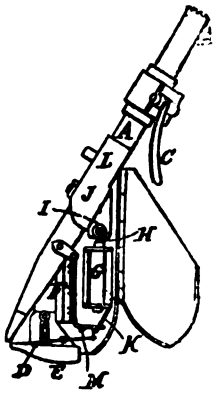

Pigment distributers.—Relates to apparatus for distributing ink or pigments in the form of spray. Air is supplied from a reservoir &c. through the main tube or stem A; the supply may be regulated by a valve worked by the lever C. The jet issues on the end of the needle D, which passes through the palette E containing the ink &c. A branch tube F passes from the stem A and is perforated so that a portion of the air current impinges on the wind-wheel G, which is mounted on a shaft H revolving

Digitized by Google

in a bearing I in the frame J connected to the slide L on the tube. A pin K projects from the axis of the wind-wheel at such an angle that in its furthest backward position it is parallel to the tube A, and works in a slot in the arm M carrying the needle D. By altering the position of the slide L the fineness of the spray is regulated.

2201. Donovan, R. E., and **McKenny, J.** Feb. 12.

Paints; japans; varnishes. — Consists in the substitution of ground or pulverized coal for the lampblack, ivory black, &c. used in the manufacture of black paints, varnishes, japans, &c.

2457. Joyes, O. Feb. 17.

Preservative or antifouling compositions. — A solution of any bituminous matter, in a suitable solvent such as crude naphtha or creosote oil or a mixture of the two, is thickened by the addition of slaked lime, with or without colouring-matter.

2498. Dick, W. Feb. 17.

Anti-corrosive or preservative varnishes or compositions for protecting steam boilers, the hulls of iron or steel ships, and ironwork generally. Red lead and litharge are incorporated with boiling Egyptian asphaltum, boiled oil being afterwards added. To this a mixture of finely-ground black-lead and asbestos is added, and when thoroughly incorporated a solution of india-rubber in benzol is also gradually added, the whole being maintained at its boiling point for an hour and constantly stirred.

2558. Edwards, R. J., and **Edwards, A.** Feb. 18. *Drawings to Specification.*

Lacquering; varnishing.—Lacquering or varnishing apparatus for tubes or bars. Consists of an annular block of felt in a casing on the end of which rotates the neck of a drum containing the lacquer and a series of felt discs with central apertures through which and the annular block the tube &c. is traversed.

2694. Clark, A. M., [*Gérard, M. P. E.*]. Feb. 21.

Varnishes.—A composition is obtained by dissolving gelatine and guncotton in any common solvent. Five parts by weight of gelatine and ten parts by weight of guncotton are dissolved separately in the solvent, preferably glacial acetic acid. The two solutions are then mixed together by stirring to form a paste to which more of the solvent is added. Before mixing the ingredients one-twentieth part of glycerine and a trace of castor oil or other fatty matter may be added. A trace of calcium chloride may be dissolved in the acetic acid to render the product uninflammable. A small quantity of gum lac is added.

3075. Read, A. Feb. 28.

FIG. 1.

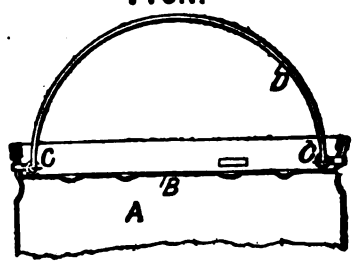

FIG. 2.

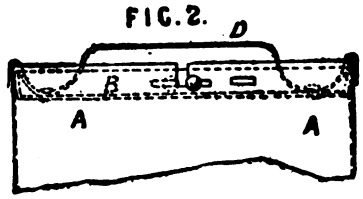

Paint and like cans.—Cans or kegs are corrugated longitudinally except at the ends, and a place may be left plain for the label or trade-mark. The lid B is fixed on the can A by means of split pins or clips C which are passed through both; two of the pins are provided with eyes, and they may be inserted from the outside to form ears for the handle D, for converting the can into a paint pot.

3124. Allison, H. J., [*Myers, H. S.*]. March 1.

Crayon paints; pigments.—Soluble colours are mixed with lime and then made into pencils with mineral wool and soap or other binding-material. A black colour is prepared by treating extract of logwood with chromate of potash and then mixing with lime. Other colours are prepared by mixing indigo, fustic, &c. with lime. To make into sticks or tablets the prepared colour is preferably mixed with dry soap and mineral wool, and made into a plastic mass with oxgall and a solution of soap; other suitable binding-materials may be used.

Digitized by Google

3280. Chadwick, R., and **Consterdine-Chadwick, J. W.,** [*trading as* R. Chadwick & Son]. March 3.

Pigments; stains.—Relates to the preparation of a colouring-matter suitable for dyeing, staining, painting, or printing in black, blue, and other colours, and to be employed as a pigment powder or fluid for dyeing wool. Extract of indigo or powdered Bengal indigo is mixed with sulphuric acid of 170° Twaddell and allowed to stand; azo scarlet or other scarlet soluble in acid, and small quantities of nigrosin, atlas violet, and Irish moss are then added and well mixed; finally, cold water, common salt solution, and a further quantity of indigo extract are mixed in and the water and acid are filtered off. The colour may be varied by the addition of small quantities of other dyes.

3794. Garton, T. March 12.

Varnishes.—Relates to a protective enamel or varnish for coating metal surfaces, consisting of "grains" mastic, camphor, sandarac, "true" elemi, Canada balsam, and turpentine. The above ingredients are dissolved in alcohol previously heated to 60° F. The resultant solution is afterwards agitated and strained or filtered.

3987. Bigsby, J. A. March 16.

Varnishes, gummy. To ordinary resinous varnishes is added a colouring-matter such as aniline dyes, Prussian blue, &c. which will withstand a high temperature.

4023. Swingler, W. H. March 17.

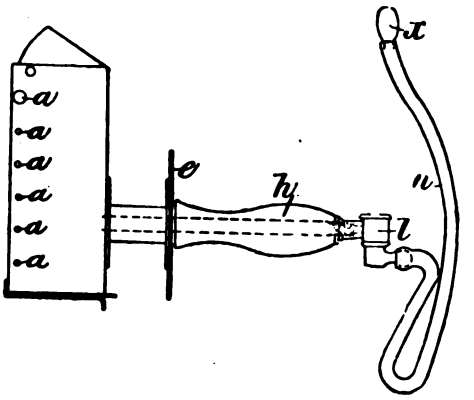

Paints, removing, charcoal stoves for. The charcoal is placed in a casing of the ordinary type, with bars *a* and a hollow handle *h* through which air is supplied by a flexible tube *n*. A shield *e* protects the hand of the operator, who blows through a mouthpiece *x*; a valve *l* prevents any vapours from the stove from reaching his mouth.

4278. Corbould, W. March 22.

Whitewash.—Equal proportions of camphor and Jeyes' sanitary powder are mixed with whitewash in the proportion of about half an ounce to a pound. The wash thus formed has disinfectant properties.

4334. Kenyon, T. March 23.

Pigments.—Zinc waste solutions, such as "flux-" "skimmings," are treated with hot air, sometimes with steam, in order to oxidize or decompose the impurities present. The iron, manganese, &c. are then precipitated by an alkali or alkaline-earth carbonate. To the zinc solution is then added barium sulphide, and the barium chloride formed is precipitated by ammonium sulphate; the mixture of zinc sulphide and barium sulphate is employed as a pigment. The solution is further treated for the recovery of salts.

4360. Keene, S. D. March 23. *Drawings to Specification.*

Varnishes for spools and bobbins are composed of ordinary japan, coarse lampblack, naphtha, and oil, to which may be added fine emery to obtain a roughened surface.

4578. Baird, J. March 28.

Polishing-liquids; polishing, French and like.—Ordinary polish, such as French polish, is mixed with petroleum in any suitable proportion, about three of the former to one of the latter giving good results, and allowed to settle. The clear transparent polish thus obtained is used as follows:—The prepared surface of wood, sandstone, plaster, or other material is coated with the preparation, allowed to dry, and again coated and allowed to dry. The surface is then rubbed down, and polished in the usual manner, no oil being necessary.

4579. Hardcastle, T. March 28.

Pigments for printing fabrics. In order to give to cotton fabrics the appearance of the silk in fabrics composed partly of silk and partly of other fibrous materials, they are printed by the ordinary process of calico printing with French white thickened with starch, gum, &c.

Digitized by Google

4583. Biggs, R. H. W. March 28.

Preservative compositions. — The zinc-chloride solution obtained as a bye-product in the extraction of tin from tin scrap is reduced to a density of 15° Bé. to form a preservative compound.

4648. Tweedale, C. L. March 29. *Drawings to Specification.*

Pigments. — Relates to improvements in galvanic batteries by which the waste products may be utilised. When lead is used as the positive element with a carbon or platinum negative pole, the insoluble lead salt which is formed may be ground and used as a pigment; or by treating it with chromic acid, bichromate of potash, or other chromic salt, chrome yellow may be produced. Dilute nitro-hydrochloric acid is the electrolyte preferably employed.

4954. Crane, F. April 2.

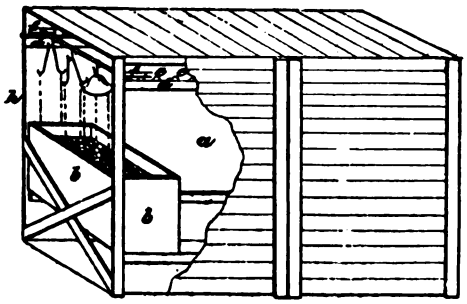

Japanning; lacquering; coating surfaces with liquids. — A chamber *a* of suitable material, stationary or on wheels for moving about, is provided at one end with a vessel *b* containing the liquid coating-compound employed, and a charging-door *h*, and at the other end with a discharging-door. In the example shown the vessel *b* is inside the charging-door, but it may be placed outside, in which case it should be covered over when not in use. Side frames *d*, *d*, provided with friction rollers *e*, *e*, are designed for carrying bearing pieces *f*, *f*, connected together by rods on which the articles, after being dipped into or brushed over with the liquid, may first of all be hung to drain, and then be pushed into the chamber. A second row of articles is then prepared and pushed in in the same manner. When the chamber is filled, the rod first inserted, now the nearest to the exit, is withdrawn. The doors are balanced by weights or springs so as to close automatically. The charging and discharging doors may be at one end of the apparatus, viz., one on each side of the central vertical line, in which case the articles are placed on rods swivelling on a vertical shaft. The articles may be air-dried, or hot-water or other pipes may be placed within the chamber for drying by means of heat.

5342. Wilkins, G. A., [*Thomas, L. H.*]. April 12.

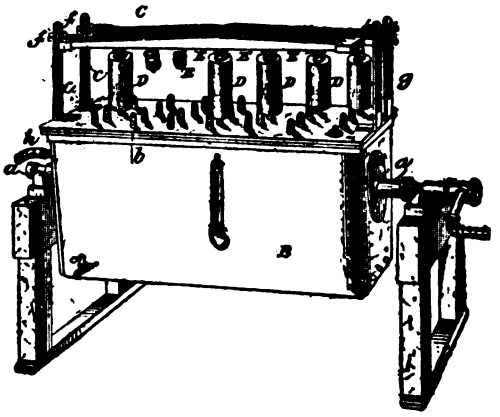

Coating surfaces with liquids.—Relates to apparatus for coating the interiors of boxes, bottles, &c. The pitch or other coating-material in the vessel B is maintained at a suitable temperature by steam pipes *h* or by a firebox placed underneath. The boxes D are held on the nozzles *b* by springs E attached to the crosshead C, which is hinged at *f* and is adjustable in the slots *c*, *g*. The vessel B is mounted on trunnions *a* so that it can be turned over to fill the boxes D with pitch. When a firebox is used, one trunnion is pivoted and the other can move along a track to remove B from the firebox.

5532. Edwards, E., [*Jeger, J.*]. April 15.

Preservative compositions.—The mosses of the family *Bryineæ*, and especially the species *Hypnum* and *Bryina*, are dried and pulverized, and the powder is used as a preservative compound.

5586. Crane, F., [*Hale, J.*, (Executrix of *Hale, R.*).] April 16.

Lacquering; varnishing. — For bright metal articles and similar objects, a solution of pyroxylin (dinitro-cellulose) in amyl acetate and benzene, or other moderately volatile solvents, is employed. In some cases essential oils or gums may be added. The objects are coated by dipping them in this solution.

5791. Crane, F., [*Hale, J.*, (Executrix of *Hale, R.*)]. April 20.

Varnishes.—Pyroxylin is dissolved in non-hygroscopic and moderately-volatile solvents, with the addition of colouring-matter, camphor, &c. if desirable. The following liquids are suitable solvents: methyl, ethyl, propyl, butyl, or amyl alcohol, amyl acetate, benzene, nitrobenzene, turpentine, or similar bodies.

Digitized by Google

6323. Wise, W. L., [*Lehmann, R.*]. April 30.

Varnishes.—Relates to apparatus for melting resins and mixing them with oil varnish and turpentine oil. The melting-vessel A consists of an upper cylindrical body C, and funnel-shaped pipes *a* leading to a lower portion *b*, and surrounded by brickwork B with a steam jacket D. The resin (amber, copal, &c.) is supplied through the holes *m*; when it has melted, the valve *g* is opened by the handle *h*, and the semi-liquid runs down the chute *i* into the vessel H, in which the oil varnish and turpentine oil have been heated by the waste steam from the jacket D.

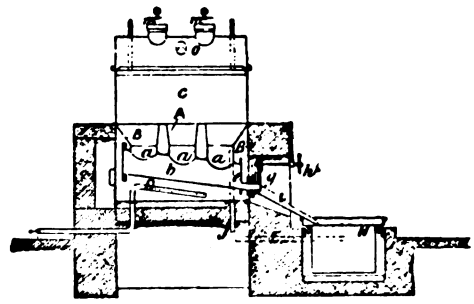

6398. Burton, H. J. May 2.

Coating surfaces with liquids; painting. — Relates to a machine for coating surfaces of glass, paper, metal, or other materials with solutions of gelatine, or emulsions, or finely-divided pigments. The emulsion &c. passes from the reservoir V into a V-shaped trough T, from whence it passes through a muslin bag M at the bottom of the trough on to the plates to be coated. G, G are inclined planes or guides by which the trough T is raised to suit the thickness of the plates &c. to be coated. The coated plates &c. are carried forward by an endless band A on the pulleys B, B, from which they are transferred to the band C carried on pulleys D where the film is allowed to set.

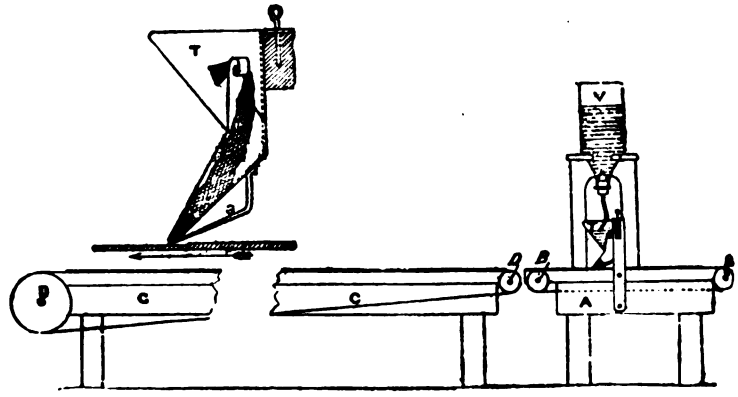

6571. Hamilton, J. W. May 4. *Amended.*

Preservative compositions.—Consists in the combination of a powerful oxidizing-agent such as a manganate, permanganate, or hydrogen peroxide with a strong preservative and antiseptic such as borax, boracic acid, salicylic acid, sodium salicylate, or an alum. A method of preparing the agent consists in fusing together caustic potash, potassium chlorate, and the black oxide of manganese, and then lixiviating the fused mass with water, treating it with carbonic acid, and crystallizing, so as to form potassium permanganate which is dissolved in a solution of borax.

6582. Molyneux, P. May 4. *Amended.*

Preservative compositions; paint vehicles; pigments.—Relates to a composition for coating tanks &c. for containing mineral oil &c., and capable of resisting the action of the liquid. The composition consists of a vehicle containing spirits of wine, shellac, gum arabic, glycerine, and solid matter containing magnetic oxide of iron or forge scale, litharge or other metallic oxide, Portland cement or calcareo-argillaceous matter, and powdered glass.

6619. Martin, J. C. May 5.

Pigments.—Barium or calcium sulphate, or a mixture of both salts, is ground, dry or wet, with calcium oxide in a proportion not exceeding thirty parts of the oxide to seventy of the sulphates. The pigment is then combined with oil in the ordinary manner. Other substances may also be employed; thus, to the above mixtures white lead, zinc oxide, iron oxide, or zinc sulphide may be added. Or zinc oxide or sulphide or iron oxide may be mixed with calcium oxide to form white or coloured pigments.

Digitized by Google

6730. Himly, M., Leiser, F., and **Bardtholdt, J.** May 7.

Colour-changing paints.—Objects endowed with the property of changing their colour when subjected to damp &c. are produced by coating, painting, or impregnating with a solution of magnesium platinocyanide in any suitable medium. Artificial flowers, cards, or pictures may be thus treated, or the solution may be employed as a sympathetic ink. The objects preserve their original colours until breathed on or otherwise damped, when they will temporarily assume a pink or red colour, or a colour partaking of these tints.

6755. Harvey, H. A. May 9.

Antifouling-compositions.—The basis of the compositions is finely-reduced arsenical pyrites, which is mixed with charcoal, arsenious acid, a salt of copper, tallow, and a suitable pigment. One example contains 56 parts of arsenical pyrites, 25 parts of charcoal, 7 parts of arsenious acid, and 12 parts of copper sulphate.

6870. Lake, H. H., [*Todd, E. N.*]. May 10.

Varnishes; lacquers.—Relates to a composition to be used in a varnish or lacquer. The composition consists of a mixture of equal quantities by weight of pyroxylin or soluble nitro-cellulose, and an oleo-resin such as balsam of Tolu, balsam of copaiba, balsam of Peru, &c.

7243. Knemeyer, L. G. May 18.

Painting.—A cement forming the painting-surface for mural painting consists of a mixture of 4 parts (by measure) of finely-ground tufa-stone, 2 parts of Portland cement, and from 1 to 2 parts of ground lime. The cement may be coloured by adding colours dissolved in water. The surface after it is dry is washed with hydrochloric acid, and after this is dry it is brushed over with a solution of waterglass and sal-ammoniac. The painting, after it is finished, may be brushed over with the same solution.

7278. MacArthur, J. S., Forrest, R. W., and **Forrest, W.** May 19.

Pigments.—Relates to a process for treating metallic ores, such as sulphides, to obtain salts and oxides. The ore is treated with a persalt of iron solution, and various metallic salts &c. are precipitated from the solution. Zinc white and other pigments are obtained in this manner.

7376. Crane, F., [*Hale, J.,* (Executrix of *Hale, R.*), and *Field, W. D.*]. May 20.

Varnishes; lacquers.—For making spirit varnishes and lacquers, resinous gums are dissolved in a medium containing amyl alcohol or acetate; one suitable varnish is made up of methyl alcohol 3 gallons, amyl alcohol or acetate 4 gallons, benzene &c. 4 gallons, and gum resin 10lbs.

7377. Crane, F., [*Hale, J.,* (Executrix of *Hale, R.*)]. May 20.

Varnishes.—Resinous gums are dissolved in a medium containing amyl acetate; one suitable varnish is made up of methyl or ethyl alcohol 5 gallons, amyl alcohol 3 gallons, amyl acetate 2 gallons, and shellac 20 lbs.

7524. Lake, H. H., [*Perkins, J. P.*]. May 25.

Paints, materials for.—Iron slag, consisting principally of iron oxide and silicate, is granulated or ground to powder, and calcined, and employed as a base for paint.

7809. Harrison, G., and **Trimming, O.** May 28.

Fireproof paints for textile fabrics and other inflammable materials. 1 lb. of sulphate of ammonium, 1 lb. of powdered borax, and 1 lb. of potash alum are dissolved in one gallon of water, and to this solution is added one ounce of boracic acid. A paint is prepared by forming a thin paste with common whiting and the above solution, to which is added boiling size and any colour.

7884. Ducker, W. M. May 31.

Preservative compositions for compressed paper-pulp sheathings for buildings are made up of equal parts of raw linseed oil, Japan varnish, and resin or tar, thinned with benzene or turpentine, and are applied in the same manner as a paint.

8031. Gould, R. June 3.

Distempers.—To the ordinary mixture of whiting and colours is added a composition of alum, Epsom salts, starch, and water. If so-called washable distemper is to be produced, copperas is added.

8253. Crane, F., [*Field, W. D.*]. June 8.

Varnishes; lacquers.—Propyl or butyl acetate, or a mixture of both, is employed as a solvent of pyroxylin, to form lacquers or varnishes, or for

Digitized by Google

other purposes to which plastic celluloid may be applied. In some cases other pyroxylin solvents, such as benzene, methyl alcohol, amyl acetate, &c., may be added.

8594. Cunliffe, W. June 15.

Varnishes.—In a process for producing artistic designs having bronzed or metallic and waxy or porcelain-like effects, a varnish is used consisting of a composition of 8 parts of white varnish (such as mastic, copal, &c.) diluted with 3 to 4 parts of turpentine, 1 part of methylated spirit, and a few drops of bichromate of potash solution.

8786. Watson, J. June 18.

Painting, graining-tools used in. A stencil of thin brass &c. is made to imitate any particular grain; it is sunk at the edges of the pattern to ensure clearness and avoid smearing.

8816. Simpson, H. J., Mackirdy, G. de M., and **Taylor, A.** June 18.

Resins; stains; pigments.—Consists in processes for obtaining tannins, gallates, kinos, and other products from the Californian "Redwood" tree (*Sequoia sempervirens*). The bark or wood is cut into pieces and, with or without crushing or bruising, is steeped in boiling water containing alkali; the alkaline solution thus obtained is precipitated with dilute acid, and the tannins &c. are obtained from the remaining liquor by the usual processes. Or the alkaline liquor may be concentrated to a paste. The precipitate or paste may be employed as a pigment, a wood stain, for staining in the manufacture of parquetry and marquetry, and for similar ornamenting purposes. For making paints it is mixed with barium sulphate, whiting, &c., and sometimes with sulphate of iron or copper &c.

9536. Allen, J. J., and **Allen Machine Co.** July 6.

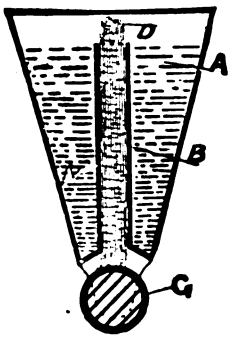

Varnishing.—The reservoir for the liquid A forms the handle of the apparatus, and the spreading-roller G receives its supply of liquid from the absorbent material D, which passes through the channel B connecting it with the reservoir.

9579. Hayward, F. W. July 7.

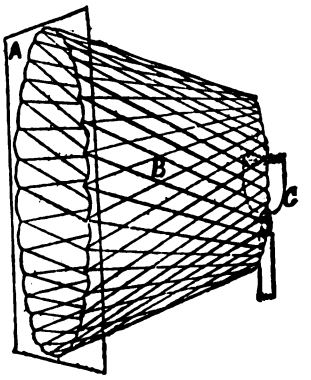

Preservative compositions.—To prevent tarnishing of metallic lamp reflectors, they are coated with a varnish prepared by dissolving 1 oz. of gelatine or glue in 2 parts of water or of a mixture of water and spirits of wine.

9887. Rust, J. July 14.

Pigments.—Sand containing iron, sandstone, or the refuse black sand from iron foundries is calcined and steam is passed over it while red hot. The brown or red colouring-matter thus obtained may be mixed with paints, cements, or other materials.

10,420. Green, W. July 26.

Varnishes.—A transparent varnish containing colophony, crystallized soda, and ammoniacal fluid, or borax, shellac, and water is employed in waterproofing fabrics.

10,656. Boult, A. J., [*Rosenfeld, S., Zeleny, J.,* and *Weiss, A.*]. Aug. 2.

Preservative compositions.—A paste for protecting metals and alloys against rust is composed of Tripoli coke, Vienna lime, petroleum, rape oil, and mirbane essence or nitrobenzol.

10,746. Winkler, A. Aug. 4. *Drawings to Specification.*

Painting embossed sheet-metal signs for advertising and other purposes. The embossed blank is coated with a thin layer of varnish, and the embossed letters and representations are variously coloured, the former preferably by a gelatine and glycerine colouring-roller in combination with stencil plates, and the latter by a transferring system in which the colour or representation is obtained from unsized paper by a felt roller and sponge. The colours are varnished over.

Digitized by Google

10,898. Keirby, E. Aug. 9.

Preservative compositions.—A thin paste is formed by adding water to a mixture of sand, quicklime, and Portland cement. To this paste is added copperas, dissolved in water, which thickens it and forms a kind of pulp. The composition may be made very thin by the addition of water and applied with a brush to masonry &c. The ingredients may be mixed together in the dry state and water afterwards added.

10,926. Molyneux, P. Aug. 9.

Preservative compositions; paints, materials for.—Refers to a composition for the lining, painting, or coating of tanks used for the storage of volatile oils such as petroleum, turpentine, &c. A powder is first prepared by mixing 16 parts of a mixture of 1 part of black oxide of iron with 2 parts of Portland cement, with 5 of litharge. A solution is then prepared by mixing, in the proportion of 100 to 5, a solution of shellac (1 part) in methylated spirit (2 parts) with a solution of gum arabic (1 part) in glycerine (20 parts). The beforementioned powder is then ground up with this solution until it acquires the consistency of paint, and is then applied as a lining to tanks. If pliability of the composition is not required, the powder, before treatment with the solution, may be mixed with 5 per cent. of powdered glass. Reference is made to Specification No. 6582, A.D. 1887.

11,376. Burton, F. G., and **Coleman, T. S.** Aug. 20.

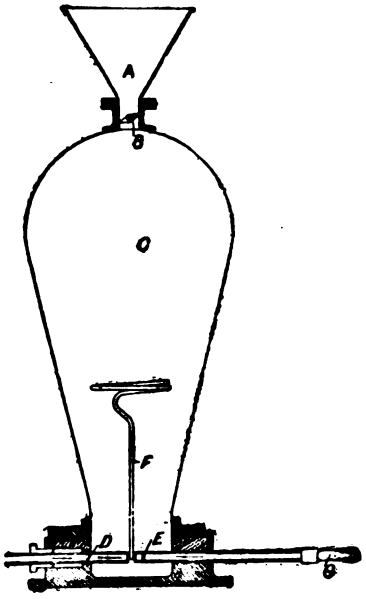

Paints, removing.—Consists in apparatus for employing jets of sand and steam, or hot water and sand. Sand is run into a chamber C from a hopper A by means of a valve B. A perforated hot-water pipe F ensures the proper flow of sand between the steam supply pipe D and the exit pipe E, for sand and steam, which leads to the perforated jet pipe G. The latter may be connected directly to the pipe E or by a hose pipe. The space between the meeting ends of the pipes D and E may be regulated.

11,664. Munier, F., and **Salvaire, M.** Aug. 27.

Staining wood by injecting colour at a boiling temperature into one end of a tree or trunk freshly cut, the operation being facilitated by exhausting at the other end of the tree or trunk. The wood is also heated to expand the fibre and facilitate its treatment. A log or part of a newly-felled tree is laid horizontally on a suitable support or supports, and its ends are inserted within or covered by cups which fit steam-tight on the ends. One cup is connected with an exhauster, such as a pump, and the other with a forcing-apparatus, by which the colour is to be forced into the pores of the wood.

11,689. Allen, A. H., and **Angus, R.** Aug. 29.

Preservative compositions for wood &c. The oil or tar from blast furnaces, gas-producers, or coke ovens is subjected to distillation to remove pitch and sometimes naphtha and the like, and treated with caustic alkali to dissolve bodies of the phenol type. The solution is precipitated by carbon dioxide (preferably by blast-furnace or similar gases containing carbon dioxide), and the crude product refined and purified by aëration and fractional solution, precipitation, or distillation. The less volatile or soluble bodies are used for preserving wood.

11,805. Banner, S. Aug. 31. *Amended.*

Resins and resinous compounds; paint vehicles; varnishes.—Consists of a process for hardening gums, resins, balsams, or oleo-resins. The material is heated to the required temperature in the vessel A, and hydrate of lime is added in small quantities with constant stirring. The gases evolved are withdrawn by suction, or air or steam blast, but preferably by connecting part of the surface only as shown with the chimney or forced draught and allowing air to be drawn in over the rest of the surface. Sulphur may be employed with, or instead of, hydrate of lime. Hydrates, oxides, or carbonates of the alkaline earths, zinc, iron, manganese, and alumina may also be employed. The gummy matter formed may be dissolved in light

Digitized by Google

hydrocarbon, linseed oil, or other medium, to form a varnish or vehicle for paint.

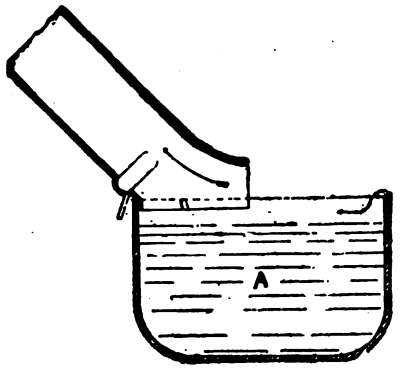

12,031. Allison, H. J., [*Banker, G. W.*]. Sept. 6.

Paint vehicles.—The oil extracted from the germs of Indian corn &c. is employed as a vehicle, sometimes with the addition of a suitable drier.

12,052. Denham, W., and **Denham, S.** Sept. 6.

Polishing, French and like.—Relates to a filler to be used in place of oil. Beeswax is boiled with amber resin, and Russian tallow is afterwards added. When thoroughly liquefied, Paris whitening, previously ground to powder, is added, and the whole is boiled for about an hour. The mixture is then poured into, and mixed, till cold, with turpentine. The composition is then ground, and is ready for use. Colours may be added if desired.

12,534. Ducker, W. M. Sept. 15. *Drawings to Specification. Amended.*

Preservative compositions.—Relates to a composition for coating paper boards used for sheathing for buildings, and consists of a mixture of linseed oil, Japan varnish, resin of tar, and benzene or turpentine.

12,632. Lyman, J. C., [*Lyman, J. H.*]. Sept. 17.

Waterproof paints.—The residue from the distillation of petroleum, known as "artificial maltha," is boiled with benzene and employed as a paint; oil, turpentine, and in some cases graphite or asbestos may be added.

13,203. Allison, H. J., [*Dormitzer, A.*]. Sept. 29. *Drawings to Specification.*

Paint and like cans.—Relates to a bucket or can to be employed with a special window-cleaning chair or painter's staging. It is formed of nearly oval section with an indentation in one of the longer sides in which is fixed a socket for attachment to a standard &c. The can is made in two or more compartments, one for paint, and others for brushes &c.

13,885. Wass, A. G. Oct. 13.

Varnishes; paints.—Acid tar and tarry residue from the distillation and refining of mineral oils is heated to about its boiling point for some time, so that when cooled it will be crisp or brittle. When used for the preparation of varnish for wooden and similar surfaces about 10 per cent. of resin is added. The tar thus treated is dissolved in turpentine until a thick pasty mass is obtained. In cases where the tar &c. is insufficiently acid, a small quantity of a suitable acid is added to cause it to dissolve. The product thus obtained is thinned with benzoline, naphtha, or other of the usual solvents.

14,011. Herman, D. Oct. 15.

Paints, materials for. — Relates to paints for candle lamps in which the candle is held up to the mouth of the tube by a spring below the candle. The ordinary metallic tube is replaced by one of glass, internally silvered or otherwise decorated. For coating the interior of the glass tube, a paint composed of the following ingredients is employed, viz.:—White lead and linseed oil in an alcoholic solution of bleached shellac, with a diluent of methylated spirit, the desired tint being obtained by the addition of suitable colouring-material.

14,245. Thake, F., and **Forrest, J.** Oct. 20.

Polishing-liquids for furniture. The polish is composed of the following ingredients mixed together in approximately the following proportions:—Linseed oil 7¼ pints, beeswax ½ pound, spirits of turpentine 18 pints, antimony trichloride 1¾ pints, vinegar 12 pints, and methylated spirits 9 pints. This polish removes grease, ink, fruit, or other stains.

14,543. Tepper, E. Oct. 25.

Fireproof paints for theatre scenery &c. The paint is composed of 78 parts of white cheese (curds), 8 of slaked lime, 5½ of phenol, and 8½ of alum.

Digitized by Google

15,231. Justice, P. M., [*Church, M. B.*]. Nov. 8.

Painting and varnishing; preservative compositions; coating surfaces, compositions for. — In preparing surfaces of carriages, buildings, &c. for painting, a coat is first applied composed of a mixture of calcined gypsum and glue; after setting, oil is brushed on, and the whole is sandpapered or the like. The paint or varnish is then applied. The first coat also forms a preservative covering for surfaces.

15,381. McLea, K., and **Punshon, R.** Nov. 10.

Paints, materials for; varnishes.—Relates to a paint or varnish for metals. A mixture of 10–15 parts of sulphur, 30–40 parts of linseed oil, 5–10 parts of resin, and 55–35 parts of ozokerit is applied to metals while hot.

15,382. McLea, K., and **Punshon, R.** Nov. 10.

Preservative compositions for preserving timber, linen, cotton, flax, and other similar fabrics, or paper &c., and for rendering them non-inflammable. The timber or fabric to be protected is steeped in a solution of calcium chloride and ammonium phosphate.

15,771. Crane, F., [*Field, W. D.*]. Nov. 17.

Varnishes.—Relates to a pyroxylin varnish in which the pyroxylin is dissolved in a non-hygroscopic menstruum and is mixed with a solution of shellac prepared as described in Specification No. 15,772, A.D. 1887. The formula given contains amyl acetate, amyl alcohol, methyl alcohol, shellac, and pyroxylin, &c.

15,772. Crane, F., [*Field, W. D.*]. Nov. 17.

Shellac, purifying. Relates to the preparation of clear, pure, and concentrated solutions of shellac. Consists in dissolving the shellac in methyl, propyl, isopropyl, butyl, or isobutyl alcohol, or in other alcoholic solvent of shellac, and in then agitating the solution with benzene or other substance which dissolves the wax or other impurities of shellac but does not mix with the alcoholic solvent. After standing at 30°–35° C. the alcoholic solution is drawn off, leaving behind the solution of impurities. The process is applicable to bleached or other kinds of shellac.

17,386. Hart, W. F., [*Larrabee, C. S.*]. Dec. 17.

Paints, materials for; stains.—Relates to the colouring of boot soles. A mixture is made of a solution of gum tragacanth or Iceland moss, or both, with hyposulphite of soda, sulphate of zinc, chloride of potash, a mordant, such as phosphoric or picric acid, and an earthy or aniline colouring-matter. The sole is prepared by sandpapering and then buffing on suitable machines. The colouring-mixture is applied by a brush, and the sole is immediately submitted to the action of a rapidly-rotating soft brush to dry the mixture before it can be absorbed. The surface may then be burnished.

17,814. Quarante, P. L., and **Escalonne, C. E. d', (Veuve),** *née* **Le Revert.** Dec. 27.

Preserving; preservative compositions.—Vegetable material is preserved and rendered uninflammable by injecting the preservative product in a closed chamber or by immersing in the preservative solution, the latter method being employed for preserving canvas, tilts, awnings, cables, cordage, &c. The composition employed preferably contains acetate of alumina or soda, sub-acetate of lead, pyrolignite of lead, and glycerine. The acetates and pyrolignites of lime or baryta and the borate of soda may also be used.

17,925. Groth, L. A., [*Collin, C.,* and *Errani, L.*]. Dec. 30.

Paints, materials for; varnishes. — Consists in preparing solutions of the different kinds of black obtained from aniline and its derivatives, such as black aniline, blue black, compound black, and unitarian black, in aniline, nitrobenzene, carbolic acid, or other similar solvents. To these solutions bitumen, resin, or fats are added according to the proposed use of the liquid.

Digitized by Google

A.D. 1888.

245. Stead, W. H. Jan. 6.

Resins, purifying. Consists in preparing gum arabic substitutes by dissolving crude dextrin or British gum or gum resins in water and then filtering the solution through animal charcoal, or its equivalent, such as fuller's earth ; or by shaking up the solution with animal charcoal and allowing the latter to settle out. For household use the gums thus prepared are treated with sufficient nitric acid to remove cloudiness. Solid gums are prepared by evaporating the clouded or transparent gums to dryness.

---

487. Orr, A. Jan. 12.

Varnishes. — Nitro-cellulose is dissolved in a special solvent, viz. chloracetate of chloramyl, which may be diluted with from 2 to 5 parts of fusel oil. The solution obtained may be employed as a varnish for coating metals, leather, woven fabrics, paper, pictures, photographs, &c.

---

607. Rave, C. Jan. 14.

Paint vehicles ; varnishes.—Relates to the treatment of the acid residuums or tars resulting from the refining of mineral oils by concentrated acids. The light oils obtained are used in making oils for painting ; the bitumen obtained is mixed with solvents to produce varnishes.

---

667. Mackay, M. Jan. 16.

Paints, materials for.—Relates to the manufacture of a fusible cement, which can also be used as a paint. A mixture of the following substances is heated :—Sulphur (about 3 parts), manganese or aluminic silicate such as steatite (1 part), and asbestos (2 parts). Suitable colouring-matter may be added. When a softer material is required a part of the sulphur is omitted and tar, pitch, resin, or other suitable material added. The material may be used as a paint by adding hot turpentine, resin, and sulphur.

678. Nipper, J. Jan. 16.

Distempers.—For making distemper colours or washes, the following ingredients are mixed together and boiled with 3 parts of flour in 2 of water :—whiting 10 parts, linseed oil 25 parts, glucose 40 parts, salt 5 parts, saccharine substance 30 parts, and water 45 parts. Before cooling, 10 parts of eggs and 40 parts of condensed milk are added, and when cold about 750 parts of lime and 60 parts of whiting.

---

683. Holzapfel, W. C. A. Jan. 16.

Antifouling - compositions. — An anti - corrosive composition for the protection of the inside of iron and steel vessels, bridges, piers, and other structures, consists of 43 parts of quick-drying varnish, 15 parts of shale spirit or the like, 30 parts of steatite, and 12 parts of Venetian red or colouring-matter.

---

720. Thompson, W. P., [*Schnitger, K. C.*]. Jan. 17.

Paint vehicles ; painting.—Oil colours are caused to have the property of hardening on the application of heat by mixing them with carnauba wax, shellac, or the like. A coating of such pigment may be laid on a picture and heated ; it is then at once ready for another coat. The thinning-medium is also mixed with one or more of the same substances. The ground for painting (canvas &c.) is treated with wax, hard fat, paraffin, resin, &c., by which it is rendered impervious to the medium at ordinary temperatures, becoming absorptive only when heated.

1101. Wallace, J. O., and **Ward, W.** Jan. 24.

Antifouling-compositions.—Ships and other submerged structures are coated successively with two compositions. The first consists of the following ingredients :—Petroleum, gum, such as gum kauri, tar, tallow, zinc, oxide, red oxide of iron, sugar of lead, pitch, and gutta-percha solution. The second contains petroleum, gum kauri, resin oil, zinc white, pine varnish, cupric acetate, mineral green, Venetian red, and sugar of lead.

Digitized by Google

2478. Wilding, R. Feb. 20.

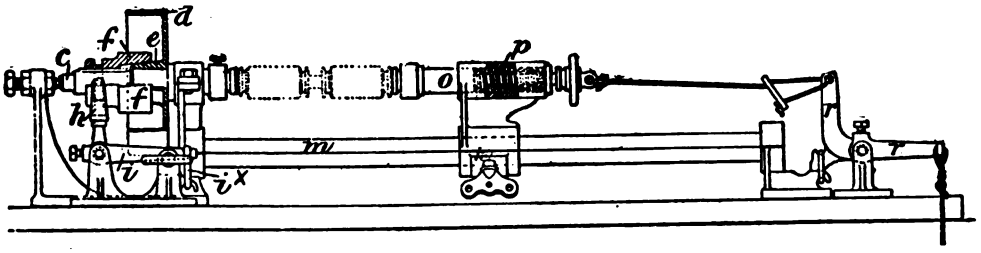

Painting and varnishing rollers and the like. Relates to a form of lathe for carrying and rotating the rollers during varnishing, particularly applicable for rollers of machines for preparing and spinning fibrous substances. The pulley *d* driving the spindle *c* in the fixed headstock is brought into engagement with the spindle by means of a friction grip arrangement *f*, *e* the cone *f* taking over the cone *e* on the boss of the pulley. The cone *f* is secured to *c* by a feather and groove arrangement, and it is operated by a fork *h* upon one arm of a bell-crank lever, the other arm *i* of which is pressed by a spring i^x against a cam operated by hand. The movable headstock is mounted upon a bar *m*, and carries a spindle or centre *o* which is acted upon by a spiral spring *p* within the headstock, and may be operated through a bell-crank lever *r* by means of a treadle. The spindles *c*, *o* are provided with sockets to fit the largest rollers, and with movable chucks for rollers of smaller size; these may, if desired, be faced with india-rubber or other suitable material, and be provided with set-screws for securing the larger rollers.

3008. Harrop, C. Feb. 28.

Varnishing; lacquering; lacquers.—Metal goods are taken from the chemical bath, rinsed first in cold and then in hot water, and dipped into a non-hygroscopic lacquer, lighter than water. The lacquer may be made by dissolving sandarac, copal, or other resin in fusel oil. After dipping, the coating is fired to drive off the surplus solvent.

3463. Kelsey, J. R. March 6.

Varnishes for hats. The hat bodies, which are made of felt, fur, wool, or the like, or a combination of these materials, are first dipped in a mixture of shellac, mastic, and gum thus dissolved in methylated spirits and turpentine, after which they are dried, proofed, and coated firstly with a solution of gums arabic, dragon, and cerise in water, and then with a mixture consisting of gums mastic and elemi dissolved in methylated spirits and added to a mixture of gum thus and turpentine with shellac and ammonia, this latter mixture serving to stick an external covering of silk plush on to the hat body.

3752. Imray, O., [*Lee, G. S.*]. March 10.

Paints, materials for; antifouling-paints; preservative compositions.—Consists in using what is termed "iron slag," which is obtained from gold and silver reduction works, in the manufacture of waterproof, fireproof, or antifouling paints or preservative compounds. The slag is chiefly composed of oxide of iron, silica, lime, and alumina. In making paints &c. it is reduced to a fine powder and mixed with 5 per cent. of talc, 5 per cent. of fireclay (from the coal measures), and 2 to 3 per cent. of lime. Asphalt and petroleum are incorporated, and turpentine, oil, or other paint vehicle added to give the required consistency.

3795. Coninck, F. de. March 12.

Fireproof paints.—Two and a quarter parts of sifted asbestos are mixed with one of zinc oxide, and combined with a solution of 30 parts of chloride of zinc (56° Bé.), 50 parts of borate of ammonia (3° Bé.), and 20 parts of solution of gelatine containing 25 per cent. of dry glue. Or the first mixture may be added to any oil paint. The paints thus obtained are suitable for application to cloths in general, theatrical scenery, carpets, wall-paper, wood, furniture, &c.

4279. Thompson, W. P., [*Morawetz, G.*]. March 20.

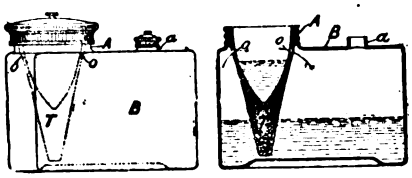

Painting and varnishing.—Relates to a receptacle for colour, varnish, &c. The vessel is provided with a "dipping well," which can be readily filled for use. The reservoir B is formed with two necks A, *a* arranged to receive tightly-fitting caps; in A is fitted a dipping-well T with two openings *o*, *o* communicating with the interior of the vessel B.

Digitized by Google

The liquid is poured in through *a*. The well T is filled (or emptied) by inclining the vessel, the caps or lids being first screwed on.

5399. Stone, R. April 11.

Paints, materials for.—Finely-powdered slate or slate refuse, with or without ground flint, is mixed with oil, turpentine, white lead, driers, and other ordinary materials. The slate may be burnt before mixing. The paint may be mixed with tar and applied either hot or cold.

5478. Harrison, A. H. April 13.

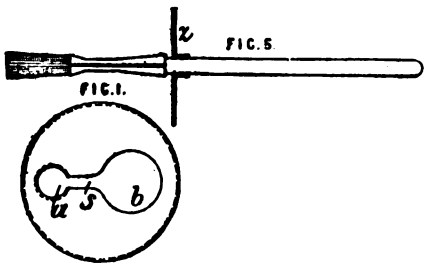

Paint and like cans.—Relates to caps and brushes for gum, paint, and like vessels. Fig. 1 shows one form of cap. There are two openings in it, one *b* through which the brush is inserted, and the other *a* through which it is withdrawn after being passed through the neck *s*. The opening *a* removes superfluous gum, paint, &c., and is flanged beneath to facilitate this action. The opening *a* may be replaced by a straight extension of the neck *s*. There may be several openings *a* radiating from a central opening *b*. The lid through which the openings are made may be replaced by a wire frame. Fig. 5 shows the brush, which is provided with a plate *z* to cover the top of the vessel.

5577. Thompson, W. P., [*Rave, C.*, partly]. April 14.

Preservative compositions.—Relates to the manufacture of materials for making floorcloth, and for other purposes where a tough, waterproof, or undecomposable material is required, and consists in the employment of certain tough bituminous materials, preferably those obtained from the acid tar residues of petroleum manufacture, as described in Specification No. 607, A.D. 1888. The bituminous materials, alone or mixed with other materials, such as sawdust, are either spread on a fabric or on paper, or incorporated with strong fibrous material. One or more alternate layers of the bituminous material and the fabric may be employed according to the thickness of material required.

5878. Fisher, T., [*trading as* Belfast Paint and Colour Manufacturing Co.]. April 20.

Paints, materials for; varnishes.—For deodorizing enamel and other paints and varnishes, and for imparting an agreeable odour to the same, the solvent is heated to boiling point to drive off volatile oils; when its temperature has fallen to about 90° F., the colours &c. are added, and the whole cooled down to about 32° F. and run into canisters. Any suitable perfume is added, and each canister is covered and agitated to diffuse the perfume.

6012. Wailes, E. F., and **Dove, E. J.** April 23.

Antifouling paints and compositions; preservative compositions; paint and like cans. — A solution of asphalt in naphtha to which oil or grease has been added is first applied and allowed to dry. A composition consisting of about 1 cwt. of asphalt, 50 lbs. of pitch, 25 lbs. of chalk or the like, 35 lbs. of Portland cement, 1 gal. of oil, and about 7 lbs. of resin, is then applied hot. The hot composition is used from the can shown in the Figure, consisting of a cylinder B containing a pan A and spirit lamp C with safety tube D. Or the pan may be otherwise heated.

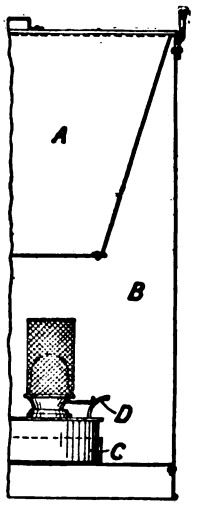

6336. Hanlon, P. April 28.

Preservative compositions; varnishes; polishing-liquids.—Relates to a composition suitable for preserving, varnishing, polishing, or coating saddlery or leather, and furniture, composed of white wax or paraffin wax, beeswax, oil of turpentine, oil of origanum, oil of rosemary, and saffron. The composition may be rendered opaque, or coloured, by the addition of any suitable pigment or colouring-matter.

6471. Molyneux, P. May 1.

Paints, materials for.—A composition for coating the interior surfaces of packing-cases for tea &c. consists of a mixture of finely-powdered black oxide of iron and Portland cement, to which is added a mixture of a solution of shellac in alcohol

Digitized by Google

and of gum arabic in glycerine. Powdered glass is also added when the coating is not required to be pliable. The inside of the chest is painted with this composition.

6478. Thompson, W. P., [*Moro, S.*]. May 1.

Preservative compositions.—Consists in the use of sodium or potassium silicate for preventing the decomposition of organic substances. It is stated to be applicable to the preservation of meat, fish, vegetables, and dead bodies, and to the exsiccation of hides before tanning.

6888. Bowring, M., and **Lyon, R. B.** May 9.

Bathbricks.—Relates to a composition for forming bathbricks &c. It consists of a mixture of 20 parts of marl, 15 parts of clay, and 28 parts of slake a (sediment deposited by tidal streams).

7033. Hannay, J. B. May 11.

Antifouling-compositions.—In the composition described in Specification No. 12,499, A.D. 1886, consisting of linseed oil, resin, mineral naphtha, zinc powder, zinc oxide, or magnesia or other basic oxide, and mercuric oxide, for the last ingredient is substituted mercurous chloride.

7458. Bracher, P. H. May 19. *Drawings to Specification.*

Preservative compositions for flower pots &c. of special construction. Consists of paraffin, gum, &c. dissolved in a light solvent.

7607. Kuess, V. J. May 23.

Pigments.—A vehicle for vitrifiable colours for treating china, glass, porcelain, &c. is formed by mixing two solutions; one of potassium silicate and acetate of lead, and the other of borax and glycerine. After painting, the articles are dipped in a bath of borax solution, hydrochloric acid, hydrofluoric acid, and sulphuric acid. In making the solutions, the apparatus shown in the Figure is employed for heating. Hot air is blown into the vessel V through the tube T from the bellows S, worked by the eccentric E, the cords C, C¹, and counterweight P. A cone A is placed below the valve of the bellows, and the entering air passes over a lighted gas jet B.

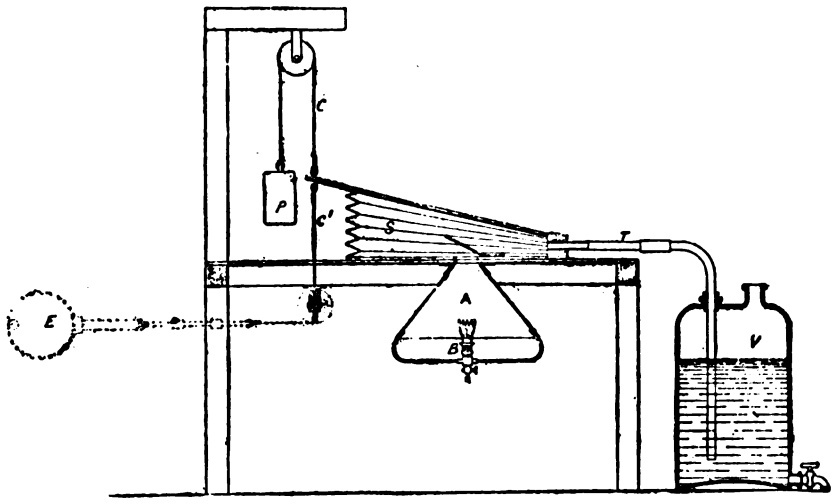

7708. Goggs, L. H., and **Irvine, T. T.** May 26.

Paints, materials for.—Relates to bronze or other metallic paints. The bronze or other metallic powder is mixed with four times its weight of a mixture composed of the following materials:—Enamel varnish half a gallon, terebene one quart, and turpentine one quart. Instead of these materials any known substitutes may be employed.

7854. Thompson, W. P., [*Matcovich, P.,* and *Grossich, A.*]. May 29.

Preserving.—"Aseptic" paper is prepared from a mixture of linen and cotton which is reduced to pulp, washed with a solution of sodium and potassium hydrates and with hot water, treated with chlorine water, washed successively with water and alcohol, then treated with phenic acid, and, lastly, compressed by centrifugal power and passed

Digitized by Google

between heated rollers. Antiseptic paper is prepared by dipping the aseptic paper in an antiseptic solution containing iodoform, salol, phenic acid, &c., to which glycerine or vaseline may be added. These papers are applicable as preservative wrappers for parchments, paintings, &c.

7929. Garton, T., and **Barkley, W.** May 30.

Varnishes.—Coal tar is heated until it will rapidly harden on cooling; 25 per cent. of asphalt is added, and then 10 per cent. of gum animi; a little linseed oil may be incorporated with the mass to thin it if necessary; lastly, 10 per cent. of litharge is added.

8435. Thompson, W. P., [*Burdick, C. L.*]. June 8.

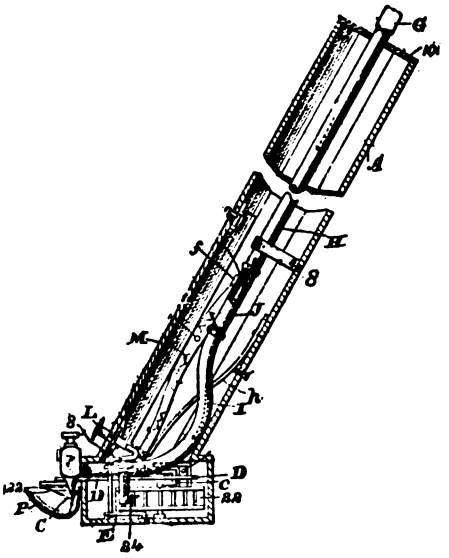

Painting, air-brushes for. The air tube G passes through the cover 101 of the case A; in the interior it is divided into two sections H, I, joined by a rubber tube J; this is ordinarily closed by a plate *f* and spring *h*, but pressure on the finger-piece L opens the tube through the lever M. The air passes to the nozzle 122 over the needle C, which is reciprocated in the paint receptacle P by the connecting-rod D actuated by a crank *c* on the wind-wheel 22, which is driven by the blast from a second nozzle 24. The throw of the needle is regulated by a frame E, in which the rod D is pivoted, and which is moved by a rod 8 attached to the finger-piece L.

9044. Dratz, C., and **Dratz, H.** June 20.

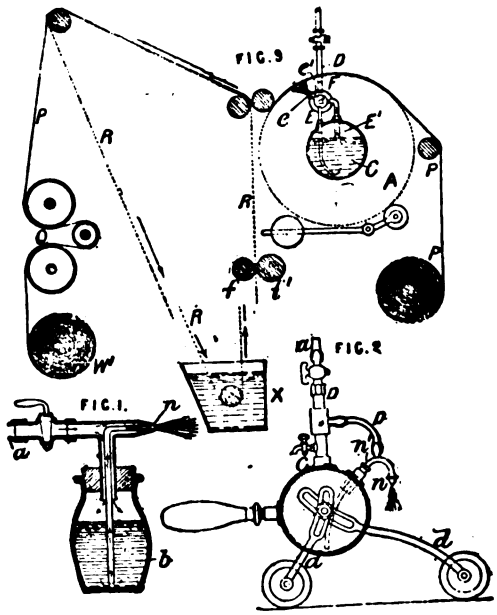

Painting.—Consists in a process of and apparatus for colouring fibrous materials, wood, leather, paper, &c. by projecting upon them liquid colours under pressure and at a high temperature atomized or in the form of spray. One form of steam atomizer is shown in Fig. 1, in which the nozzle *n* is supplied with steam by the pipe *a* and with colour by the tube *b* submerged in colour which is under the steam pressure. A form for hand use is shown in Fig. 2, consisting of a cylinder C mounted on adjustable slotted arms *d*, and provided with a steam pipe D and a number of tubes n^1 supplying colour under pressure to the nozzles *n*, branches supplying the latter with steam. In the atomizer shown in Fig. 9, a tube E is provided with a row of conical nozzles *e* and with a steam pipe D. Branches E^1 transmit steam pressure to the colour in the cylinder C. An inner pipe F is provided with nozzles e^1 below the nozzles *e*, and with colour supply tubes. Stencils are prepared by coating zinc sheets in a bath of paraffin, and applying thereto sheets of waxed paper bearing the pattern. The outline is traced by a soft iron point which causes the paraffin to adhere to the paper, so that it is removed with the latter. Acid is then applied to eat out the zinc. Patterns are also made of openwork fabrics rendered impervious by electro-metallurgy or by impregnating with albumen, gum, gelatine, or starch rendered insoluble by bichromate of potash or the like. The stencils may be plane or cylindrical. One form of impregnating-apparatus consists of a horizontal table upon which one or more frames carrying patterns and pieces of material thereon to be treated are caused to pass to and fro under a set of colour-supplying steam atomizers or spray-producers. Another form is a continuous machine consisting of a series of

Digitized by Google

cylindrical stencils, each enclosing a steam atomizer for supplying one of the various colours. In Fig. 9 is shown a form of continuous rotary machine in which there is fixed within the pattern cylinder A an atomizer with a series of nozzles *e*, each connected with a separate compartment of a cylinder C containing the various colours. The material P passes thence upon an absorbent felt band R, which circulates successively through a trough X and squeezing-rollers *f*, *f*^{1}, by which it is continuously cleansed. From the band R the material P passes round heated drying-rollers Q, and thence to a winding-on roller W^1. In a modification, the atomizers are external to the cylinder, and the material travels with an endless stencil upon the latter.

9570. Helliwell, T. W. July 2.

Preservative compositions.—A mixture of boiled oil, mutton fat, and turpentine is used for coating steel, iron, or any combination of such metals, and is especially applicable for taps and valves.

10,192. Eastman, J. H. July 13.

Preservative compositions; antifouling-compositions.—Consists in treating gas tar to purify it and to obtain therefrom ammonium sulphate, phenols, and a preservative coating for iron, steel, and other structures, and for the bottoms of iron and steel ships and other vessels. The tar is heated to about 100° F., and then intimately mixed with sulphate of lime and water, more sulphate of lime being added, if necessary, until ammonia ceases to be evolved. The mixture separates into an aqueous solution, purified tar, and a precipitate. The phenols are obtained from the precipitate by treating it with sulphuric acid and then lixiviating it with light tar oils, and the tarry solution thus obtained is treated with a solution of caustic soda. The resulting material, after being separated from the tar oils, is treated with dilute sulphuric acid, whereby the phenols are liberated. The light tar oils can be used over again for the same purpose. The ammonium sulphate is obtained by evaporating the aqueous solution. The preservative coating is obtained by mixing the purified tar with petroleum, naphtha, or other light spirit.

10,292. Langford, W. July 16.

Preservative compositions; paints and washes, materials for; japans; varnishes; antifouling-paints. — A composition for ornamenting and preserving metals, wood, bricks, tiles, stone, glass, paper, &c., exposed to the atmosphere, and salt and fresh water, and for rendering the same impervious to heat and water. The composition consists of a mixture of oil, manganese, nitric acid, gas tar, turpentine, gold size, prussian blue, and other colouring-matters; the whole is brought to its proper consistency by boiling, forming a wash, paint, enamel, japan, or composition applicable for the above purposes.

10,301. Oates, E. July 16.

Varnishes, removing, compositions for. Potato starch is mixed with water and caustic soda lye. After the action has ceased, more water and starch are added. The liquid compound thus formed may be diluted as required. Other amylaceous substances or alkalies may be substituted for the starch and soda.

10,365. Oates, E. July 17.

Paints, removing, compositions for. Iceland moss is boiled with caustic soda for about an hour; after cooling, caustic potash is added; after again boiling and cooling potato starch is incorporated with the mass.

10,379. Jackson, J. H. July 17.

Varnishes.—Relates to an enamelling-composition which consists of the following ingredients: spirit, resin (or benzoin), and shellac. Bronze powder is mixed with this varnish, and it is applied to metal and other surfaces.

10,601. Turnbull, R. July 21.

Antifouling-compositions.—A series of compositions or coatings are applied to ships or other structures liable to corrosion. The first consists of paraffin or naphtha, pitch, and marine or fish glue, glue, or of shellac varnish, or of a solution of pitch in naphtha. The second contains asphalt, pitch, tar, marine glue, and paraffin wax. A thin coating of calico, linen, thin paper, &c. is then applied, and over this a composition of asphalt, tar, and Portland cement.

10,757. Wendling, F. July 25.

Paints, materials for. — Various zeolitic and similar minerals are used as a base for paints, for stones, plaster, and the like, with the addition of about 50 per cent. of suitable colouring-matter, and applied with milk of lime. Or an artificial mixture of silicates having about the same composition may be employed. Suitable proportions for the base are, silicic acid 10 to 12 parts, alumina and iron oxide 2½ to 4, lime and magnesia 1½ to 3, soda and potash 2 to 5, and water 3 to 8.

Digitized by Google

11,209. Davison, A. J. Aug. 2.

Antifouling paints and compositions.—An anti-corrosive composition is made of a mixture of resin, coal tar, black lead, and burnt lime. An anti-fouling-paint is formed of creosote, shellac, resin, methylated spirit, and red lead.

11,398. Brentini, P. Aug. 7.

Paints, removing.—A mixture of Irish moss, methylated spirits, fuller's earth, water, and an aqueous solution of caustic soda and potash is applied to the painted surfaces, and then after some time the paint may be removed by washing.

11,554. Wotton, W. O. Aug. 10.

Antifouling-compositions.—The vehicle consists of a solution of caoutchouc in turpentine to which resin and linseed oil are added. A coat is first applied of this composition mixed with red lead, and then one of the composition mixed with red lead and powdered copper or copper alloy.

12,774. Lake, H. H., [*Choate, S. F. van*]. Sept. 4.

Preserving; preservative compositions.—Relates to a composition and devices for facilitating the use thereof, chiefly designed for preserving animal and vegetable substances. The composition consists of a mixture of the chlorate, chloride, and hydrate of potassium with manganese oxide, preferably moulded into conical form with a binding-mixture of hydrogen peroxide and gum tragacanth. The composition is stated to be applicable for preserving animal and vegetable matter such as meat, fish, poultry, farmyard produce, preserves, milk, butter, and eggs, preserving beer and other fermented liquors, and the like. The mixture when used in the solid form is contained in a perforated conical mould of the shape shown in the Figure, which rests in a saucer or other vessel C containing water or other suitable liquid, and is placed in the vessel &c. containing the substance to be preserved. The moulds and saucers &c. may be placed in an ice box or chamber, in a railway wagon or truck for the transport of animal &c. substances, in the preserving-chamber of a ship, in a butter receptacle, &c., the substances being impregnated with the vapours given off. For restoring partially-decayed matter to a fresh condition, the composition is dissolved in water or other liquid and applied to the matter under treatment.

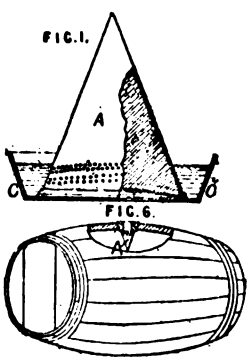

12,795. Sommer, A. Sept. 4.

Paint vehicles.—In combining chloride of sulphur with fats, oils, &c. to form so-called "vulcanized "oils," it is generally necessary to neutralize the acid set free in the reaction. For this purpose a suitable neutralizing-agent, such as calcium, manganese, or magnesium oxide, hydrate, sulphide, borate, &c., an amide, or a soap is added. The addition may be either to the oil or to the sulphur chloride, and the reagent may be added in solution, or as powder, or by blowing a gas charged with it through the mass, according to the fat treated and the nature of the product desired. In the case of some fats &c. which are very energetically acted on by the chloride of sulphur, the fat or the chloride is diluted with a suitable proportion of a non-volatile inert substance such as paraffin oil, stearin, &c., and the operation is carried on at a low temperature. Other fats are treated at the ordinary temperature, while a third class require the aid of heat for complete combination. The fatty acids and waxes are also combined with chloride of sulphur by the action of heat. The semi-liquid or solid sulphochlorinated oils &c. thus obtained are used in the preparation of vehicles for paints and lubricants. Paraffin, vaseline, &c. may be added to the oil or fat before it undergoes the vulcanizing process.

12,827. Andrews, A. Sept. 5.

Varnishes.—A composition or varnish for protecting iron plates, tanks, ships, and the like from the action of petroleum and similar substances. Consists of a mixture of gum mastic, shellac, methylated spirit, boiled linseed oil, and some colouring-matter, such as oxide of iron, or graphite.

12,892. Leroux, C. J., and **Fischbach, J. H.** Sept. 6.

Painting and varnishing.—Relates to a process of painting on metal plates. The plates are backed with fine canvas by means of rye-flour paste. The plates are cleansed by essence of turpentine before painting. The colours used are ground with turpentine and mixed with thick varnish; the first coating is extended over the metal plate and the canvas, and fired at a temperature between 50° C. and 100° C. The other coats are prepared and fired in a similar manner. A finishing-coat of varnish is laid on and fired.

Digitized by Google

12,964. Taylor, C., Murchison, R. I., and Sharpe, G. Sept. 7.

Preservative compositions for wood, to prevent attacks of ants and other insects. The composition consists of white arsenic 3 ozs., sulphate of copper 1 oz., caustic soda 1 oz., saltpetre ½ oz., sulphur ½ oz., and sal-ammoniac ½ oz. The above ingredients, the proportions of which may be varied, are powdered and dissolved in water. The solution is applied in the form of a spray or wash.

13,007. Hipwell, E., and Hofmann, B. B. Sept. 8.

Varnishes.—Relates to the preparation of an enamel or varnish specially applicable for rendering casks and analogous articles damp-proof. It is made as a thick enamel, or as an enamel wash according to requirements. The thick enamel is prepared of white shellac, alcohol, and methylated spirit mixed with French chalk or alanin. The thin enamel is prepared by mixing a special rice and gelatine water mixture with the French chalk or alanin, and then adding methylated spirit to which gum arabic or isinglass has been added.

13,012. Allen, J. J. Sept. 8.

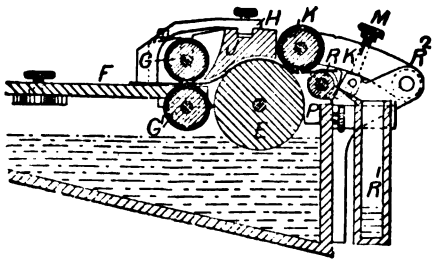

Coating surfaces with liquids.—Gum, paste, or other liquid is applied to paper and other flexible substances and cardboard by passing the material over the cover F and between the guide-rollers G, G¹ to the gumming-roller E, against which it is pressed by the bar J. The cover F carries a strickle and is adjustable to and from the roller E. The bar J is grooved along the top and carries the guides H. A tension roller K is mounted upon pivoted arms which can be adjusted by a set-screw M. The material is taken off the gumming-roller E by stripping-fingers P, and passes over a finishing-roller R, provided with a strickle R^2 for removing the froth into the trough R^1. For gumming cardboard the bar J is dispensed with, and the rollers G and K raised to the required height.

13,721. Mangle, W. C. Sept. 22.

Preservative compositions for coating metal, wood, and other substances. About 56 gallons of coal tar, pitch, or the like is boiled with 8 gallons of cow dung; after straining, 8 gallons of oak bark or other tanning-material are added, and the mixture boiled for about 2½ hours; after again straining, 8 gallons of sulphur and 6 gallons of resin are stirred in, and finally 70 lbs. of gypsum is added. When cold the composition is mixed with turpentine or other thinning-material. The surface to be treated may be first coated with chalk.

14,040. Thompson, W. P., [*Russell, J. B.*]. Sept. 29.

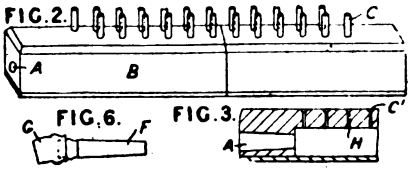

Coating surfaces with liquids.—Relates to apparatus for coating pills or other small articles. The pills or other articles are supported, while being dipped, in the ends of tubes C, or in concavities C^1, attached to or formed in a hollow wooden block B and communicating by passages H with the interior thereof, from which the air may be partially withdrawn by inserting a taper tube F, connected by a flexible tube G with a suction apparatus, into the orifice A. The pills &c. are distributed to the tubes C or cavities C^1 by placing a perforated board immediately above the apparatus and throwing the pills thereon. After the first dipping, the tube F is withdrawn and the pills left to dry, after which the tube F is again inserted and the block B inverted above a second block of the same construction, the perforated board intervening. The tube F is then withdrawn and the pills allowed to drop into the second apparatus so as to have their opposite sides coated.

14,107. Hall, J. W., [*Lewis, G. T.*]. Oct. 1.

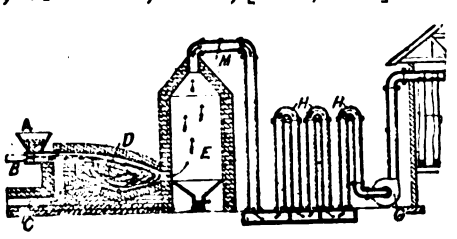

Pigments.—Relates to the manufacture of lead pigments. Powdered galena is placed in the hopper A and blown into the combustion chamber D by

Digitized by Google

an air blast through the pipe B, together with gaseous hydrocarbon fuel entering through the tube C. Or the galena may be soaked in liquid hydrocarbon. A fan G draws the oxidized mixture through the chamber E, in which the heavier particles settle, the pipe M, and the cooling-tubes H, and the compound or pigment collects in bags of textile fabric.

14,728. Hodgson, J. Oct. 13.

Luminous paints for advertisements and name plates. The luminous composition is made up of 1 lb. of Balmain's luminous paint powder to 1 lb. of size and 2 gallons of water. Or for the paint powder may be substituted another composed of 50 parts of calcium oxide, 32 parts of calcium or barium sulphide and 18 parts of calcium or barium sulphate.

14,854. McIntyre, B. F. Oct. 16.

Preservative compositions.—Relates to a composition, consisting of sulphoricinoleate of ammonia, carbonated and ammoniated salts, and boracic acid for fireproofing and preserving fabrics, wood, &c. The fireproofing-composition is formed of sulphoricinoleate of ammonia, carbonate of ammonia, cream of tartar, acetate of soda, and hydrochloride of ammonia, to which mixture boracic acid may be added for preserving purposes. When required for use the mixture is dissolved in distilled water in the proportion of one lb. to a gallon.

15,564. Baynes, J., Doughty, W. H., and Greaves, H. T. Oct. 29.

Antifouling-paints.—Copper phenolate is made by acting on 50 parts of copper scale with 17 parts of carbolic acid in an airtight vessel for several days. To this are added 21 parts of zinc oxide, 28 parts of iron oxide, 4 parts of red lead, 4 parts of arsenic, and 5½ parts of boiled seed oil. The mixture is ground to a fine powder, heated to boiling point, and mixed with seven parts of shellac or other gum, and 3 parts of turpentine. A mixture of 56 parts of resin, 2 parts of sugar of lead, and 17 parts of turpentine is then stirred in, and, after cooling, 36 parts of naphtha are added. The paint is applied with a brush over a priming coat.

15,971. Danby, J. Nov. 5.

Antifouling and preservative compositions.—"Doggerstone," an iron-bearing rock found in north-east Yorkshire, is calcined, ground, and applied by water.

15,997. Boult, A. J., [*Eichler, C. H.*]. Nov. 5.

Paints, materials for.—A fire, water, and rot-proof paint is made by incorporating about 50 per cent. of pulverized slate, 4 per cent. of driers, 3 per cent. of sal-ammoniac, and 3 per cent. of liquid water-glass or silicious varnish, with about 40 per cent., by measure, of heated oil tar.

16,035. Challoner, S. Nov. 6.

Varnishes; lacquers.—To spirit varnishes or lacquers camphor oil is added. Suitable proportions for a metal-coating varnish are:—Methyl or other alcohols 32, benzene or other hydrocarbons 23, camphor oil 27, and shellac or other gum resins 18.

16,180. Bergmann, F. W. Nov. 8.

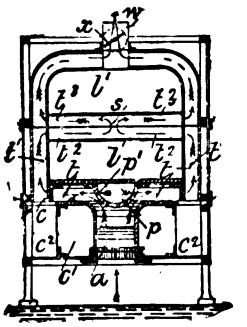

Japanning.—Relates to ovens for baking, japanning, drying, &c. The upper part of the fireplace *a* contains a retort *p* charged with coal, the gas from which escapes through side openings p^1 into the flue *t*. Beneath the flue *t* is a chamber c^1, separated from the outer casing by a soot-depositing chamber c^2. The heating-chamber *l* is surrounded by the flues *t*, t^1, t^2, which contain soot-depositing plates *c*. One or more sections, each containing a heating-chamber l^1, may be built upon the first. The furnace gases pass through central openings, provided with dampers in the top of the flue t^2 into the flue t^3 of the upper section, whence they escape by the chimney *w*, provided with a damper *x*. The central flues may be constructed so as to be removed, by which means two heating-chambers may be converted into one of larger dimensions.

16,502. Bender, E. Nov. 14.

Painting on fabrics. The dry colours are powdered and mixed with resin; the mixture is applied by a brush or by the finger to the surface (of velvet, satin, &c.) to be painted, and subjected to the vapour of spirits of wine.

17,554. Harrach, M. A. Dec. 1.

Polishing-liquids.—To avoid the use of oil in polishing furniture and the like, the ordinary furniture polish is mixed with spermaceti, stearin,

Digitized by Google

stearic acid, palmitin, palmitic acid, or paraffin dissolved in ether or other suitable solvent.

17,799. Downs, S., and **Greenwood, W.** Dec. 6.

Painting.—Filling for use by painters &c. is made of lead, patent dryers, japanners' gold size, turpentine, and whitening.

17,946. Binns, F. J., and **Paris, R. J.** Dec. 8.

Antifouling-compositions.—A mixture of 60 to 80 parts of zinc with 40 to 20 parts of carbon (graphite), together with colouring-matters and a suitable vehicle, is employed for protecting ships' bottoms and the like.

18,716. Morfit, C. Dec. 21.

Resinous compounds.—Relates to the manufacture of resin liquor for papermakers and others, and consists in the substitution of aluminate of soda for caustic soda, soda ash, or carbonate of soda, as the solvent for resin. The aluminate of soda in solution, of the proper strength, is prepared by adding alumina to a hot solution of caustic soda in a vessel containing a circular steam blow-up pipe. When the alumina is dissolved, more water is added, and the solution is thoroughly agitated and then allowed to settle, so that a clear solution may be drawn off. A solution of aluminate of soda may also be prepared from the ordinary solid salt of commerce. The solution is next heated by a steam blow-up pipe to about 200° F., and finely-powdered resin is gradually dissolved therein. A more dilute solution, obtained by using a weaker aluminate solution, may be used.

Digitized by Google

APPENDIX.

The first of the following abridgments should be added to those appearing in the volume for A.D. 1877–83.

A.D. 1883.

1809. Dunlop, R. April 10. [*Provisional protection only.*]

Preserving.—Relates to vessels designed to allow liquids to be stored and drawn off in small quantities without leaving the surface exposed to the air. A vessel of cylindrical or other suitable form, of metal, glass, stoneware, &c., is fitted with a piston the rod of which passes through the cover. The piston is kept in contact with the surface of the liquid, and when the latter is drawn off through a tap provided near the bottom of the vessel air is admitted through a venting-valve in the piston. The valve rod passes through the cover. When the required liquid is drawn off, the valve is closed and the piston pressed down into contact with the liquid. The piston may be constructed to float during the drawing off of the liquid, and its packing tightened by a special locking-apparatus when the tap is closed. To fill the vessel the piston is removed.

A.D. 1884.

3119. Dunlop, R. Feb. 12. *Drawings to Specification.*

Preserving.—Relates to a cylindrical vessel, fitted with a piston, for storing and preserving liquids, in such a way that small quantities may be withdrawn without leaving the surface exposed to the action of air. The piston consists of two discs with an inflated hollow ring of india-rubber between them. The discs are attached, respectively, to a tubular piston-rod and to an internal rod or tube with a nut at the top by means of which the discs may be adjusted. The piston either floats on the surface of the liquid or is lowered to it after each withdrawal of liquid.

LONDON:
PRINTED FOR HER MAJESTY'S STATIONERY OFFICE,
BY DARLING & SON, LTD., 1, 2, 3 & 5, GREAT ST. THOMAS APOSTLE, E.C.
PUBLISHED AT THE PATENT OFFICE, 25, SOUTHAMPTON BUILDINGS,
CHANCERY LANE, LONDON, W.C.

1897.

Digitized by Google

THE NEW YORK
PUBLIC LIBRARY
ASTOR, LENOX AND
TILDEN FOUNDATIONS.

PATENTS FOR INVENTIONS.

ABRIDGMENTS OF SPECIFICATIONS.

CLASS 96,

PAPER, PASTEBOARD, AND PAPIER-MÂCHÉ.

PERIOD—A.D. 1884–88.

LONDON:
PRINTED FOR HER MAJESTY'S STATIONERY OFFICE.
BY DARLING & SON, LTD., 1, 2, 3 & 5, GREAT ST. THOMAS APOSTLE, E.C.
PUBLISHED AT THE PATENT OFFICE, 25, SOUTHAMPTON BUILDINGS,
CHANCERY LANE, LONDON, W.C.

1896.

PRICE ONE SHILLING.

Digitized by Google

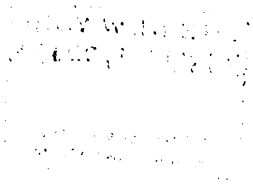

Digitized by Google

THE NEW YORK PUBLIC LIBRARY
ASTOR, LENOX AND TILDEN FOUNDATIONS.

PATENTS FOR INVENTIONS.

ABRIDGMENTS OF SPECIFICATIONS.

CLASS 96,

PAPER, PASTEBOARD, AND PAPIER-MÂCHÉ.

PERIOD—A.D. 1884–88.

LONDON:
PRINTED FOR HER MAJESTY'S STATIONERY OFFICE,
BY DARLING & SON, LTD., 1, 2, 3 & 5, GREAT ST. THOMAS APOSTLE, E.C.
PUBLISHED AT THE PATENT OFFICE, 25, SOUTHAMPTON BUILDINGS,
CHANCERY LANE, LONDON, W.C.

1896.

Digitized by Google

THE NEW YORK
PUBLIC LIBRARY
ASTOR LENOX AND
TILDEN FOUNDATIONS.
1893.

THE ASTOR LIBRARY
NY

Digitized by Google

EXPLANATORY NOTE.

The contents of this Abridgment Class may be seen from its Subject-matter Index. For further information as to the classification of the subject-matter of inventions, reference should be made to the *Abridgment-Class and Index Key*, published at the Patent Office, 25, Southampton Buildings, Chancery Lane, W.C., price One Shilling, postage (parcel post) Sixpence.

It should be borne in mind that the abridgments are merely intended to serve as guides to the Specifications, which must themselves be consulted for the details of any particular invention. Printed Specifications, price Eightpence, may be purchased at the Patent Office, or ordered by post on the Patents Form C[1] (to be obtained from any Post Office), no additional charge being made for postage.

SUBJECT-MATTER INDEX.

Abridgments are printed in the chronological order of the Specifications to which they refer, and this index quotes only the year and number of each Specification.

Calendering paper and the like. *See* Paper and paper-making.

Cellulose, Fibrous. *See* Paper and paper-making.

Paper and paper-making:
Excepting Paper, Treating after manufacture, [*Abridgment Class* Cutting &c.];
for which see that heading.
air, separating dust and other impurities from. *See Abridgment Class* Air and gases, Compressing &c.
alarm apparatus. '*84*. 761. '*85*. 14,939.
antiseptic paper. *See* paper, kinds of *below*.
antiseptics for. *See Abridgment Class* Medicine &c.
beating-engines. *See* rag-engines &c. *below*.
bleaching. '*84*. 2316. 7511. 10,240. 11,333. 11,877. 12,385. 12,732. 13,929. 14,859. '*85*. 6839. 8808. '*86*. 2051. 3472. 7663. 8493. 14,673. 16,411. 16,765. 16,780. '*87*. 1816. 1993. 3937. 4953. 7550. 11,812. 12,903. 15,350. '*88*. 5453. 8161. 8840. 9106. 11,458. 13,192. 13,193. 13,741.
boards. *See* paper, kinds of *below*.

Paper and paper-making—*cont.*
boiling. '*84*. 2316. 2701. 5838. 9509. 9774. 9797. 10,240. 11,651. 11,655. 11,877. 12,346. 12,427. 14,071. 14,735. 14,754. 14,988. 16,186. 16,428. 16,429. '*85*. 1767. 4569. 5626. 8073. 13,933. '*86*. 2278. 3472. 6654. 7633. 8486. 8493. 15,856. 16,113. '*87*. 3937. 5269. 8817. 8861. 8969. 12,762. 12,903. 13,004. 15,350 '*88*. 4931. 8059. 9106. 11,150. 11,848. 13,396. 14,643. 17,876. 18,003.
breaking-engines. *See* rag-engines &c. *below*.
calendering and pressing. '*84*. 5377. 6012. 12,744. 15,819. '*85*. 1412. 3640. 11,581. 14,290. '*86*. 5002. 14,864. '*87*. 910. 11,735. 16,154. '*88*. 2134.
feeding sheets. *See Abridgment Class* Printing, Letterpress &c.
pulleys and driving-drums. *See Abridgment Class* Mechanism &c.
rollers for. *See Abridgment Class* Fabrics, Dressing &c.
cardboard. *See* paper, kinds of *below*.
cleaning rags and fibres. '*85*. 7772.
washing. *See Abridgment Class* Bleaching &c.
colouring pulp or web. '*84*. 2316. '*85*. 2722. 2723. '*86*. 9358. 16,780. '*87*. 9211. '*88*. 9106.

Digitized by Google

Paper and paper-making—*cont.*
compound paper. *See* paper, kinds of *below.*
copying-paper. *See* paper, kinds of *below.*
corrugating during manufacture. '87. 5805.
couch rolls. *See* paper machines *below.*
cutting-machines for paper. *See Abridgment Class* Cutting &c.
cutting-up or pulping. *See* rag-engines &c. *below.*
cylinders or drums for. '84. 3202. 5377. 6376. 15,819. '86. 16,483. 16,715. '87. 2133. 8399.
damping. '88. 15,451.
dandy rolls. '84. 8348. '85. 15,702. '86. 14,492. '87. 6563. '88. 12,687.
deckles. *See* paper-machines *below.*
digesters. *See* boiling *above.*
driving-mechanism for machines. *See subheading indicating machine driven.*
driving-mechanism for mills, arrangements of. '84. 8154.
drying. '84. 3202. 5377. 9059. 14,881. 15,819. '85. 3921. 10,092. '86. 1795. 3665, [*Appendix, page* 72]. 4427. 6228. 16,411. 16,765. 16,780. '87. 5406. 5425. 6709. 7113. 9211. 10,105. '88. 585.
felts. '84. 3817. 5360. 12,152. '85. 476. 10,092. '88. 11,826.
washing. *See Abridgment Class* Bleaching &c.
fibrous materials. *See* materials &c. *below.*
fireproof paper. *See* paper, kinds of *below.*
folding paper. *See Abridgment Class* Printing, Letterpress &c.
Fourdrinier machines. *See* paper machines *below.*
knotters. *See* strainers *below.*
leather boards. *See* paper, kinds of *below.*
macerating. *See* raw materials, treating *below.*
materials, fibrous, used for paper. '84. 2316. 3780. 6376. 9091. 10,240. 12,385. 12,744. 14,735. 16,186. '85. 3038. 4151. 4207. 11,561. 14,348. '86. 2915. 3472. 4934. 5563. 8936. 9178. 10,267. 12,159. 12,532. 15,887. '87. 759. 2830. 8391. 8817. 12,534. 12,903. '88. 6070. 7350. 7854. 12,190. 14,235.
medicating pulp. *See* pulp, treating *below.*
millboards. *See* paper, kinds of *below.*
mixing and agitating pulp. '84. 12,152. '86. 6585. '87. 12,417. '88. 9106. 13,741. 18,039.
moulds. '84. 15,119. '85. 3921. '88. 12,687.
paper, kinds of—
antiseptic. '84. 593. '86. 12,217. '87. 13,255. '88. 7854. 13,917.
aseptic. *See* antiseptic *above.*
bank note. *See* cheque &c. *below.*
blotting. '88. 4768.
boards. '84. 2316. 2885. 5377. 9059. 9091. 9723. 10,240. 11,732. 12,152. 15,961. 16,891. '85. 1412. 3038. 4151. 4207. 5461. 6603. 7458. 7495. 9319. '86. 4218. 4427. 5002. 5563. 6228. 8936. 9646. 10,126. 12,159. 14,614. 16,411. '87. 5296. 8399. 12,534. 14,003. '88. 7350. 12,190. 14,235. 17,693. 18,658.
bookbinding. '84. 9723. '86. 9646.
buildings and structures, for making. '87. 12,534.
cheque, draft, and like. '84. 3202. '85. 2722. 2723. '86. 9358. '87. 7226. 9211.

Paper and paper-making—*cont.*
paper, kinds of—*cont.*
cigarette. '86. 4934. 10,267. '87. 759.
coloured. '85. 6603.
compound. '84. 151. 8245, [*Appendix, page* 71]. 9059. 9723. 11,732. '85. 3038. 4958, [*Appendix, page* 71]. 6603. 7458. '86. 9646. 9968. '87. 14,003. '88. 2288, [*Appendix, page* 72]. 7350. 9321. 13,917. 18,658.
copying. '86. 14,274.
corrugated. '86. 9968. 10,126. '87. 5805.
disinfectant. *See* antiseptic *above.*
embossed. '85. 4958, [*Appendix, page* 71]. 6603. '86. 4218. '87. 9817. '88. 8906.
fireproof. '84. 2885. 3780. 9091. '85. 4151. '86. 5563. '87. 5296. '88. 7350. 10,107. 17,693.
floor coverings. '86. 3665, [*Appendix, page* 72]. '87. 9817.
leather boards. *See* boards *above.*
medicated. '87. 13,255. '88. 13,917.
millboards. *See* boards *above.*
packing and wrapping-up paper. '84. 151. 10,585. '86. 9646. 9968. 10,126. '87. 9817.
paper-bag. '84. 151.
paper felt. '84. 593.
parchment paper. '85. 8130.
pasteboard. *See* boards *above.*
perfumed. '84. 593. '85. 4230.
railway and like ticket. '84. 151.
rollers or cylinders for mangling, calendering, and like machines, paper for. '87. 8391.
roofing. '85. 4207. '86. 14,614. '88. 17,693.
tissue paper. '87. 9211.
toilet or sanitary. '87. 13,255. '88. 6796. 18,107.
advertising on. *See Abridgment Class* Advertising &c.
medicated ink for. *See Abridgment Class* Writing-instruments &c.
tracing-paper. '87. 9211.
transfer. '87. 120. 7090.
transparencies, paper for. '84. 15,119.
wall and ceiling coverings and linings, paper for. '84. 2316. 8245, [*Appendix, page* 71]. 9091. '85. 3038. 4958, [*Appendix, page* 71]. '86. 3665, [*Appendix, page* 72]. 8493. '87. 9817. '88. 2288, [*Appendix, page* 72].
waterproof. '84. 2316. 8245, [*Appendix, page* 71]. 12,744. '85. 4151. '86. 3665, [*Appendix, page* 72]. 5563. 7904. 8493. 14,614. '87. 5296. 9211. '88. 7350. 10,107. 12,190. 13,917. 17,693.
wire-strengthened. '85. 14,846. '86. 5563. 14,614. '88. 7350.
writing. '86. 12,217 '87. 10,105.
paper machines. '84. 151. 3013. 3202. 5360. 5377. 8154. 9723. 12,152. 13,256. 15,119. 16,891. 16,961. '85. 1462. 1753. 3921. 4300. 5461. 6603. 7458. 8130. 8685. 10,543. '86. 503. 4427. 5129. 7336. 14,361. 15,430. '87. 5805. 6563. 6945. 8160. 8399. 11,735. 15,761. '88. 585. 1738. 2106. 8730. 8906. 9942. 11,826. 15,234.
pasteboard. *See* paper, kinds of *above.*
preserving, treating pulp for. *See* pulp, treating *below.*
pressing. *See* calendering and pressing *above.*

Digitized by Google

Paper and paper-making—*cont.*
processes, compound. '*84*. 5838. 12,744. '*86*. 3665. 9178. 15,856. '*87*. 3937. 8969. 12,762. 12,903. '*88*. 9106.
pulping-engines. *See* rag-engines &c. *below*.
pulp, materials for. *See* materials &c. *above*.
pulp, mixing and agitating. *See* mixing &c. pulp *above*.
pulp, moulding to form articles other than paper and paper boards. *See Abridgment Class* Moulding &c.
pulp, separating metals from. '*88*. 17,227.
pulp, special mixtures of. '*84*. 2316. 3780. 10,240. '*86*. 10,267. '*87*. 5296. 9817.
pulp, treating, [*excepting* processes otherwise provided for]. '*84*. 593. 2316. 2885. 11,816. 14,859. 15,961. '*85*. 2722. 2723. 3980. 4230. 5585. 6839. '*86*. 1795. 3665, [*Appendix, page* 72]. 5563. 7904. 8148. 8493. 12,217. 14,274. 16,411. 16,780. '*87*. 7226. 13,255. '*88*. 4768. 8981. 10,107.
pulp, washing. *See* washing pulp *below*.
pumps for. *See Abridgment Class* Pumps &c.
rag-engines and other pulping-engines. '*84*. 1675. 2028. 6376. 11,177. 11,759. '*85*. 7156. 9433. 9602. '*86*. 795. 2221. 2915. 4237. 4871. 7694. 9885. 10,237. 10,872. 11,084. 13,827. 15,006. 15,856. '*87*. 746. 1808. 2935. 5649. 6174. 7779. 8862. 8969. 10,375. 12,003. 12,374. 15,543. '*88*. 427. 807. 2842. 9106. 13,741. 15,956. 16,932. 17,189.
rags, cleaning. *See* cleaning rags &c. *above*.
raw materials, treating, [*excepting* boiling]. '*84*. 2316. 2701. 5838. 6376. 7654. 9509. 9797. 10,240. 10,409. 11,655. 11,877. 12,385. 14,735. 14,859. 14,988. '*85*. 1767. 4207. 6840. 7495. 8808. 11,561. 13,022. 14,348. '*86*. 2915. 3472. 5563. 8256. 8493. 8936. 9178. 12,532. 15,856. 15,887. 15,942. '*87*. 3937. 8817. 12,762. 12,903. 15,350. '*88*. 427. 807. 2842. 9106.
rosin liquor merely *stated* to be applicable for. *See Abridgment Class* Paints &c.
roughening. '*88*. 18,107.
sand traps. '*86*. 15,856. '*87*. 12,903.
sanitary paper. *See* paper, kinds of *above*.
sizes and similar finishes. '*84*. 3780. 12,566. '*85*. 5585. '*86*. 8148. 12,159. '*87*. 120. '*88*. 12,190.
sizing. '*84*. 12,566. '*85*. 3921. 5585. '*86*. 7904. 8148. 12,159. '*87*. 7090. '*88*. 9106. 9321. 12,190.
strainers. '*84*. 761. 1079. 11,816. 14,101. '*85*. 7932. 8162. 8616. 12,041. '*86*. 3111. 10,814. 11,927. 14,603. '*87*. 3927. 4058. 4073. 5528. 6897. 8591. 8782. 12,105. 15,333. '*88*. 2208. 4704. 9106. 9339. 10,915. 12,502.

Paper and paper-making—*cont.*
strawboard. *See* paper, kinds of *above*.
stuff-chests. '*85*. 14,939. '*86*. 6585. 17,040. '*87*. 12,417.
suction boxes. *See* paper machines *above*.
sulphites. *See Abridgment Class* Acids, alkalies, &c.
tissue paper. *See* paper, kinds of *above*.
toilet paper. *See* paper, kinds of *above*.
tracing-paper. *See* paper, kinds of *above*.
washing pulp. '*84*. 14,859. '*86*. 3472. '*88*. 11,150. 13,741.
washing rags. *See Abridgment Class* Bleaching &c.
waste paper, treating for re-manufacture. *See* raw materials, treating *above*.
waste products, treatment and utilization of. '*84*. 2701. 4202. 9797. 11,655. 12,379. '*85*. 1767. 6676. 7495. 8808. '*86*. 7859. 13,286. '*87*. 4600. 11,610. 12,762. 13,004. '*88*. 8371. 11,841. 15,675.
watermarking. '*84*. 3202. 8348. '*85*. 27. '*88*. 1146. 12,687.
waterproofing pulp. *See* pulp, treating *above*.
waterproof paper. *See* paper, kinds of *above*.
webs, guiding and stretching. '*85*. 1753. '*87*. 15,761.
weighting pulp. '*84*. 2885. 12,193. '*87*. 3937. '*88*. 9106.
calcium sulphate for. *See Abridgment Class* Acids, alkalies, &c.
winding or reeling. '*84*. 2191.
wire-cloths. '*81*. 4328, [*Appendix, page* 70]. '*82*. 2212, [*Appendix, page* 70]. 5993, [*Appendix, page* 71]. '*84*. 16,961. '*85*. 27. '*86*. 16,935.
wood, cutting and grinding. '*84*. 4784. 11,389. '*86*. 9647. 10,872. '*88*. 2046. 2842.

Papier mâché. '*84*. 2316. 3780. 15,119. 17,056. '*85*. 2979. 9319. '*86*. 3572, [*Appendix, page* 71]. 8493. 12,532. 15,294. '*87*. 7884. 8817. 10,879. 12,430. 13,502. '*88*. 5384. 7350. 8981. 15,659.
treating by embossing, moulding, French polishing, printing, *or* cutting and working *is indexed under the special headings* Embossing &c., [*Abridgment Class* Printing other than letterpress &c.]; Moulding &c., [*Abridgment Class* Moulding &c.]; Polishing, French &c., [*Abridgment Class* Paints &c.]; Printing &c., [*Abridgment Class* Printing, Letterpress &c.]; Wood and the like, Cutting and working, [*Abridgment Class* Wood &c.].

Digitized by Google

NAME INDEX.

The names in *italics* are those of persons by whom inventions have been communicated to the applicants for Letters Patent.

Abadie, A. .....'86. 15,006
Abel, C. D.....'84. 2701
'85. 2722. 2723
Ainsworth, R. H. .....'86. 2051
Albutt, A.....'84. 16,186
Allan, R.....'88. 2134
Allen, H......'86. 8256
„ *S.* .....'86. 8256
Allison, H. J.....'86. 3665, [*Appendix, page* 72]
Allport, D. .....'86. 14,614
Alsing, J. R. .....'87. 12,003
Andreoli, E. H. M. ....'88. 8161 13,192. 13,193
Annandale, J. H. '88. 9106. 9942
Archibald, W.....'85. 1753
Aria, C. D.....'88. 8981
Armstrong, H. G.....'88. 6796
„ J.....'85. 14,846
Arnold, A.....'82. 2212, [*Appendix, page* 70]
Arnold, C. .....'85. 8130
Ashworth, M. .....'87. 15,350
„ W. J.....'87. 10,375
Atkins, C. H. .....'88. 17,227

Bache-Wüg, C. .....'88. 11,458
„ H. .....'88. 11,458
Bachmann, L. G......'84. 12,744
Baker, J. M. .....'85. 3038
Baldwin, J.....'87. 11,735
Ball, C. E. .....'86. 2278
Barataud, C. .....'87. 5649
Barlow, S. .....'84. 9723
Barnes, G. P.....'85. 3921
Bastet, L.....'87. 5296
Beaunier, A. D......'85. 7458
Beck, W. H. .....'85. 4207
Beckwith, J. H.....'84. 14,754
Bédart, G. A. .....'86. 15,430
Bedford, J.....'85. 4230
Behr, A. ...'84. 9797. '85. 1767
Bentley, D.....'86. 16,715
„ G. .....'85. 13,933
'86. 16,715. '87. 2133
Bertram, A. N. .....'88. 11,841
„ W.....'87. 5406. 5425
Bevan, E. J.....'85. 6839. 6840
Biggin, T.....'84. 11,759
Birchall, C. F. B. .....'88. 5384
Bird, G. .....'87. 6945
Black, F. X.....'85. 8616
„ J. M.....'86. 4427
Blackman, H.....'86. 15,856
Blanchet Bros. & Kleber.....'84. 3202. '85. 27
Boake, A.....'88. 8840
Bond, J., (daughter of).....'84. 15,961
Boult, A. J.....'84. 10,409
'85. 476. '86. 9178. '87. 1816
„ W. S. .....'85. 6676
Bowery, W.....'87. 8399
Brailsford, J. .....'87. 12,374
Brasier, E. .....'88. 7350
Brélaz, G. L.'84. 9509. '87. 5269
Brin, A. .....'87. 4953
„ L. Q. .....'87. 4953
Brin, L. Q......'88. 5453
Brin's Oxygen Co.....'88. 5453
Brodie, R. .....'84. 1675
Brown, J. G. .....'86. 12,217
„ R. .....'87. 6563
Bruce, W. P. .....'85. 4300
'88. 4704
Brüngger, H. '88. 13,396. 18,003
Budd, J.....'88. 5384
Burrows, W. A.....'88. 14,235

Chambers, A. .....'88. 8059
Cheneg, P. C. .....'87. 12,430
Clark, W.....'84. 12,385
Cloudman, F. A.....'87. 11,610
Closs, G......'86. 7633
Coburn, I. C......'84. 10,409
„ *L.*.....'84. 10,409
Cole, H. .....'86. 8256
Cooper, C. F. .....'86. 14,763
'87. 1993
„ R.....'84. 761
Cornett, J. P.....'85. 8685
Cragin, P. H. .....'86. 10,814
'87. 3927
Craig, J.....'87. 8391
Crane, P. Moir-.....'87. 5805
Crawford, M......'87. 2830
Crompton, R.....'87. 9211
Crookes, C. .....'86. 795
Cross, C. F.....'85. 6839. 6840
Crossley, J.....'84. 3817
Cumming, J. G.....'87. 16,154

Dahl, C. F......'84. 2701
Dahl, C. F. '87. 4600. '88. 11,150
Danielson, L. G.....'88. 9321
Davies, E. .....'86. 8936
Davidson, A.....'84. 593
Dawson, B.....'86. 7859
Day, St. J. V.....'84. 10,585
De la Rue, W. W.....'84. 8348
Diana, A.....'88. 18,658
Dickson, J.....'87. 2935
Dixon, J.....'84. 3013
Donkin, B.....'85. 5461
Drewsen, V. B. .....'88. 11,458
Ducker, W. M .....'87. 7884 12,534
Dulfus, Baron L. M....'84. 3780
Dunbar, J. G.....'86. 6585

Edwards, E.....'87. 746
„ S.....'86. 10,126
„ W. .....'88. 8371
Edwards, W. F. .....'86. 503
Elias, L. .....'86. 9646
Elliott, G.....'84. 11,759
„ G. W.....'86. 10,872
Escher, Wyss, & Co...'84. 14,101

Fabre, E......'88. 2842
Fellner, A. .....'84. 16,186

Digitized by Google

Fessy, J. B......'85. 7511
Fileppi, D. .....'88. 11,826
Flinsch, F......'84. 9059
Foley, W. J......'84. 13,256
Ford, C. J.....'88. 1146
Foulis, J.....'84. 4202
Francke, D. O.....'84. 11,651
Frank, A.....'86. 13,286
Fry, G.....'84. 11,389
Furstenburg, R. W. '88. 17,693

Galloway, C. J. .....'84. 14,754
Gardner, H.....'87. 8969
Gibson, T. B.....'87. 13,502
Goodall, T.....'87. 5528
'88. 9339
Gourlay, J. .....'87. 12,105
Greenhalgh, J.....'85. 14,939
Greening, L.....'82. 5993, [*Appendix, page* 71]
„ N.....'82. 5993, [*Appendix, page* 71]
Greenleaf, O. S.....'88. 15,234
Griffiths, G. .....'88. 427
Grossich, A. .....'88. 7854
Groth, L. A. '85. 9602. '86. 7633
Grozier, W. D.....'88. 10,915
Grünert, E. O.....'84. 15,119
Guichard, E. A. D...'84. 12,385

Hacking, J. .....'88. 807
„ J. W.....'88. 807
Haddan, H. J.....'84. 4784
'85. 7495. 9433. '86. 8486
Hall, W. .....'88. 12,502
Hanbold, C. H. .....'87. 8391
Harris, H. F.....'86. 8936
„ I. B.....'86. 14,361
Hartley, W.....'85. 1412. 3640
'86. 5002
Hawke, F. .....'88. 1146
„ J. .....'88. 4768
Hawthorn, J. .....'84. 14,881
Haydock, J.....'85. 14,939
Hermite, E......'84. 13,929
Hermite, E. '86. 14,673. '87. 1993
Herz, L. .....'86. 16,483
Hess, F. S. .....'87. 14,003
„ S.....'87. 14,003
Heys, W. E. '85. 4151. '86. 5563
Hibbert, G...'86. 4237. '87. 6897
7779
Hickisson, J.....'84. 15,961
Hilton, N. L. .....'88. 18,039
Hodges, S. H. .....'84. 16,891
Hoeborn, H.....'88. 585
Hollyman, S.....'87. 7113
Holmes, P. H......'84. 4784
Hopkinson, J.....'84. 15,819
„ J. A.....'84. 15,819
Horne, J. .....'87. 7113
„ J. H. .....'86. 10,237
Howard, F. B.....'86. 15,294

Hoyt, J......'84. 11,177
Hucks, W. .....'85. 8162
Hull, W.....'86. 7694

Imray, O....'84. 6012. '87. 9817

Jackson, J. B.....'85. 13,933
'86. 16,715. '87. 2133
Jardine, J. .....'88. 15,675
Jeffers, W. W. D. ...'87. 15,543
Johns, H. W.....'84. 9091
Johnson, J. H. ...'84. 151. 3202
7511. 9059. 11,177. 13,929
'85. 27.
„ J. Y. .....'87. 2830
'88. 2842
Jordan, J. .....'85. 7156
Justice, P. M.....'84. 7654

Kassner, G.....'85. 11,561
Kellner, C. .....'86. 15,942
Kenyon, J. .....'85. 10,092
„ T.....'84. 2191
Killin, W. .....'88. 2106
King, C. M.....'87. 7226
Kingsford, C. .....'84. 12,379
Kirk, G. .....'87. 7090
Kirlew, R. L.....'84. 2885
Kleber, Blanchet Bros. &.....'84. 3202. '85. 27
Knowles, C. W. .....'84. 12,193
Korschilgen, J. P. .....'85. 9433
Kron, R.....'86. 9885. 14,603
Kurtz, F......'85. 9602

Ladewig, E......'85. 4151
„ *E. G. H.*.....'86. 5563
Lake, H. H. ...'84. 6376. 13,256
'85. 3038. 7156. 7458. '86. 2278. 8256. 9968. 14,492
'87. 1808. 12,430. '88. 8059. 11,848. 15,234. 17,227
18,107.
„ W. R. ...'84. 8154. 12,346
'85. 4958, [*Appendix, page* 71]. '86. 503.
Lamb, M. A. .....'87. 7090
La Rue, W. W. de.....'84. 8348
Lehmann, A. .....'84. 12,152
'85. 5461
Leishman, W.....'84. 5360
Lewis, A.....'88. 18,658
Liddell, J. P. .....'84. 14,881
Lindsay, J.....'88. 2134
Livesey, H.....'84. 2191
Lorimer, J. H.....'86. 16,411
16,765. 16,780

Lortzing, C......'88. 6070
Louvot, E. P.....'85. 2979
Lundberg, A. .....'88. 17,876
Lunge, G.....'84. 11,333

McDougall, A. .....'85. 4569
„ I. S.....'84. 16,428
16,429. '88. 14,643
„ J. .....'86. 1795
„ J. T. ....'84. 16,428
16,429. '86. 1795. '88. 14,643.
McDougal, T. .....'88. 15,675
McFarlane, J.....'86. 11,084
„ L. .....'87. 910
McGrath, P. W. .....'87. 759
Mackenzie, A.....'86. 6585
Mackirdy, G. de M. ...'87. 8817
Macnarey, J. .....'87. 2133
Makin, B.....'86. 13,827
„ J...'84. 14,071. '85. 5626
Mallary, G. H.....'86. 7336
'87. 8861. 8862
Manby, E. B.....'86. 2051
Manning, J. A. .....'88. 8059
Marshall, F. J. .....'87. 1808
„ *G. E.*'84. 8154. 12,346
Marshall, T. A. .....'85. 15,702
Masson, J. B. .....'88. 2106
Matcovich, P......'88. 7854
Mayfield, J. R. .....'84. 2028
Mehner, G. H. .....'84. 5377
Meinert, B.....'86. 6228
'87. 15,761
Menzies, R. C...'85. 6839. 6840
'87. 7226
Meyrueis, J. A......'84. 151
Mills, C. K.....'88. 17,189
Minns, H. R. .....'86. 4218
Miragoli, E. S. .....'85. 4958, [*Appendix, page* 71]
Mitscherlich, A.....'84. 11,655
11,816. 12,566
Moir-Crane, P. .....'87. 5805
Molyneux, P. .....'88. 15,659
Morel, C. .....'88. 17,189
Morfit, C.....'86. 8148
Morrow, H. W. .....'85. 9319
Morse, E. A. .....'84. 6376
Morton, F. G.....'85. 13,022
Müller, A. .....'85. 4207
Munzinger, A. .....'85. 476
Musil, E.....'86. 9358

Nacke, E. H......'87. 746
Napier, W.....'85. 6603
Nast, W. F.....'86. 15,887
Nation, W. B.....'85. 8808
Nenninger, R. F. .....'86. 3665, [*Appendix, page* 72]
Newton, P. A. .....'88. 2046
Nicolle, P. W.....'87. 11,812
Norris, H. D......'86. 9968

Digitized by Google

Palmer, T. J.....'88. 8906
Pass, E. de.....'86. 16,935
Patent Papier Fabrik zu Penig. '85. 2722. 2723
Paterson, E. J.....'86. 14,673
'87. 1993
Pearce, A. B.....'88. 1738
Peckham, W. M......'88. 8059
Pesier, P. E.....'87. 12,762
Petrie, E. B. .....'87. 7550
„ F. W.....'85. 7772
„ J.....'85. 7772
Pettigrew, J. '84. 14,735. 14,988
Phœnix, T.....'87. 7090
Pictet, R. P. .....'84. 9509
'87. 5269
Piette, L......'84. 6012
Pitt, G. .....'87. 5269
„ S.....'84. 9509
Pond, G. H. .....'84. 6376
„ *J. A.*.....'86. 3572, [*Appendix, page* 71]
Ponty, J......'84. 3780
Prinz, A.....'84. 5838
Purdie. J.....'85. 1753

Quellmalz, E.....'84. 5838

Ransome, A. .....'84. 11,389
Redfern, G. F. .....'86. 4871
Reid, T. A.....'84. 9774
Rhodes, B. .....'84. 11,732
Ricci, R. S. M. de....'84. 17,056
Richardson, C. J.....'85. 10,543
Robert, C. W. J. L. '88. 12,687
Roberts, F. G. A.....'88. 8840
Robertson, J. .....'85. 14,290
Roeckner, C. H.....'85. 7932
„ F. L.....'85. 7932
Rogers, H. J. .....'86. 11927
'87. 4073. 15,333
„ W. .....'85. 14,274
Roth, A. F.....'86. 9647
Routledge, T.....'84. 12,427
'86. 15,006
Rowland, T. .....'85. 1462
'86. 2221
Rubay, F. .....'87. 1816
Russell, C. .....'86. 10,814
'87. 3927

Salamon, N.....'85. 13,022
Salomon, F...'88. 13,396. 18,003
Scammell, J. B.....'86. 4934
10,267
Schlesinger, H. A....'88. 13,917
Schnurmann, H......'86. 7633
Schofield, H. .....'86. 17,040
Schott, G. A. J.....'88. 6070
Schulte, H.....'88. 13,741
Scott, J. .....'88. 2208
Selkirk, A. .....'88. 11,848
Sheldon, A.....'85. 12,041
Shepherd, G. .....'87. 6709
Shillito, T. R.....'85. 8130
Shorrock, J. H. .....'88. 15,956
Simmons, W. A......'87. 9817
Simonds, A. A. .....'87. 10,105
Simonet, M. H. .....'86. 4871
Simpson, D. C. .....'85. 3980
„ H. J. .....'87. 8817
Sinclair, R. D.....'86. 12,217
Smith, C. .....'86. 14,492
Smith, J. .....'87. 11,812
„ R...'85. 11,581. '86. 5129
14,864. '87. 12,417
Snell, C. S. .....'88. 10,107
Soc. Industrielle et Commerciale des Métaux. .....'86. 16,935
Southmayd, J. A. ...'84. 11,877
Springer, C. C. .....'85. 8073
Stanley, J. C. W.....'85. 14,348
'86. 2915
Steimmig, R. .....'88. 2046
Stevens, S. S. .....'87. 8969
Storey, C......'84. 12,346
Storey, H. L.....'88. 2288, [*Appendix, page* 72]
„ I. H. .....'88. 2288, [*Appendix, page* 72]
Swan, P. S......'84. 10,585

Taylor, A. .....'87. 8817
Taylor, C. F. .....'84. 10,409
Thame, J. R. .....'87. 10,879
Thompson, J.....'87. 4058
Thompson, R. H......'86. 9968
Thompson, W. P. ...'84. 12,744
'86. 3572, [*Appendix, page* 72]
'87. 13,004. '88. 7854. 11,826
Thomson, R. M.....'84. 16,961
Tidcombe, G.....'84. 1079
'88. 16,932
Tijou, W.....'86. 6654
Tompkins, J. D.....'86. 3472
Toppan, C.....'86. 7663
Townsend, A. W. ...'84. 12,732
„ R.....'84. 12,732
Tronche, A......'88. 2842
Turnbull, J. .....'88. 4931
Turner, J. A.....'84. 8245, [*Appendix, page* 71]
„ W. H.....'87. 120

Ubbelohde, A......'86. 9178
United States Cotton Seed Cleaning Co......'84. 7654
Urquhart, W. W. .....'88. 2134

Vessier, H. .....'84. 14,859
Voigt, C. H......'85. 7495
Voith, F.....'87. 6174

Wagener, H......'85. 4207
Walker, W. B. .....'86. 7694
Waller, J. E. .....'88. 6796
Walton, J. M.....'86. 16,113
Warhurst, A. B.....'85. 4230
'87. 13,255
Warren, J. E. .....'87. 11,610
Watson, H.....'86. 3111
Webster, T...'87. 5528. '88. 9339
Weygang, C. .....'85. 5585
'86. 7904. 12,159. '88. 12,190
Wheeler, S. .....'88. 18,107
Whiting, M. M.....'81. 4328, [*Appendix, page* 70]
Wilbaux, A.....'84. 14,859
Wild, R.....'87. 7550. 15,350
Wilkie, T. J. .....'84. 11,389
Wilkinson, A...'84. 2316. 10,240
'86. 8493. '87. 3937
„ F.....'87. 5805
Willcocks, R. T.....'88. 8730
Wilson, J. H. .....'86. 12,532
Wise, W. L.....'84. 14,101
Wœrn, W. .....'86. 8486
Wolf, S......'87. 13,004
Wood, A.....'88. 5384
„ J.....'87. 8160. 8782
„ R.....'87. 8591. 8782
Wright, A. .....'87. 12,903
Wrigley, F. .....'88. 15,451
Wüg, C. Bache-.....'88. 11,458
Wüg, H. Bache- .....'88. 11,458
Wyss, & Co., Escher...'84. 14,101

Young, T. G. '84. 14,735. 14,988

Digitized by Google

PAPER, PASTEBOARD, AND PAPIER MÂCHÉ.

Patents have been granted in all cases, unless otherwise stated. Drawings accompany the Specification where the abridgment is illustrated and also where the words *Drawings to Specification* follow the date.

A.D. 1884.

151. Johnson, J. H., [*Meyrueis, J. A.*]. Jan. 1.

Compound paper; paper machines. — A paper suitable for packing goods, paper bags, railway tickets, &c. is obtained by pressing together two sheets wet from the making moulds, one sheet being of superior quality. The Figure shows how the sheets may be obtained superposed, from cylindrical moulds. The two layers are united by pressing-rollers A, A^1.

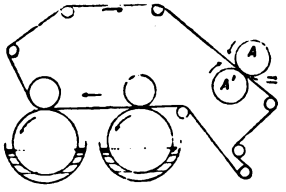

593. Davidson, A. Jan. 3.

Paper felt.—Consists in adding the extract of some aromatic wood, or the wood itself in a powdered state, to the pulp in the manufacture of paper felt, so as to give it a pleasant aroma and keep out moths.

761. Cooper, R. Jan. 5.

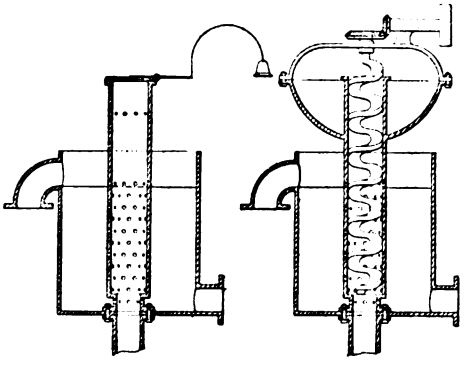

Strainers.—Relates to straining-apparatus preceding the "agitator vat." The pulp is pumped into a vessel provided with delivery and overflow outlets. A central perforated stand-pipe forms a continuation of the pipe leading from the pump. The refuse accumulates at the upper part of the stand-pipe and is removed by hand or by an archimedean screw; in the former case, when the pipe gets choked, a lid is raised, causing a bell to ring.

1079. Tidcombe, G. Jan. 9.

Strainers, suction. India-rubber &c. doctor plates A^1 projecting from a travelling belt A work over the surface of the strainer and, being grooved at right-angles to the belt, carry forward the knots &c. over a ridge C, depositing them in a filter vessel D having a gauze bottom *d*, and containing perforated

Digitized by Google

plates. The trough E receives the water. The impurities retained by the vessel D are passed through suitable rollers. A toothed doctor may be used for very long fibres. The belt A is supported in

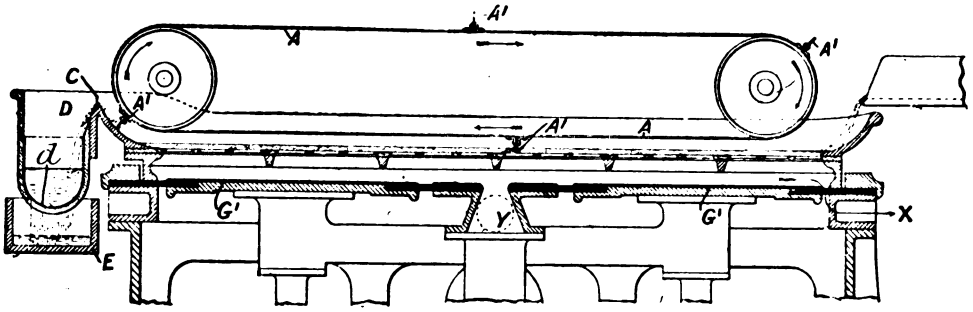

adjustable bearings on light framework. The movable part G¹ may be actuated by suitable knuckle-joints operated by a balanced crank, and the pulp instead of being led away through a central passage may be passed through side passages X or Y.

1675. Brodie, R. Jan. 18.

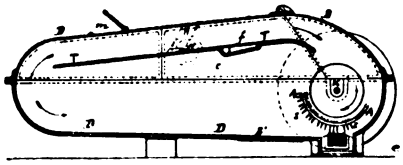

Rag-engines.—The Figure shows a section of the rag-engine. The breaker roll A rotates on a horizontal axis K at one end of the casing D, and is fitted with blades S. It may be adjusted to any degree of closeness to the fixed blades *e* by set-screws. The pulp is thrown up by this roll A and descends the inclined division T, to the lower part of D, and is again acted on by the blades until sufficiently pulped. A valve at N is then opened through which the pulp is discharged, while a movable portion H of the inclined division T, T rotates upward on an obliquely-set hinge and stops the passage of the pulp to the left; or the pulp may be discharged through the opening b^1 at the bottom. *m* is an opening through which the materials are introduced. *f* is a washer against which the pulp is deflected, so that any dirty water may be discharged at an opening at *c*.

2028. Mayfield, J. R. Jan. 24.

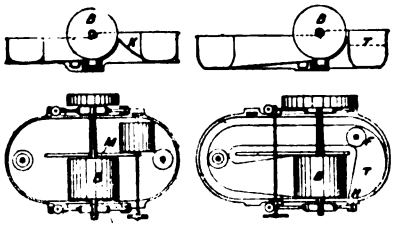

Rag-engines.—The object of this invention is to secure a more thorough admixture of the pulp during the process of beating. In place of the "backfall" K and the adjacent portion of the midfeather M of an ordinary engine, a trough T, large enough to receive and convey the pulp from the roll B to the back of the engine, is fixed parallel to the roll or nearly so, its bottom being inclined downwards from H to F. The same arrangement may be made in existing engines by removing the "backfall," placing the trough at the end of the midfeather, and moving the roll up to it.

2191. Livesey, H., and Kenyon, T. Jan. 26.

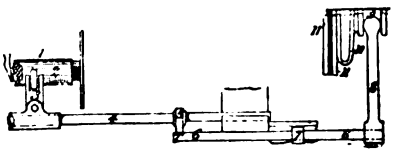

Winding.—Consists of a taking-up motion for machines in which paper &c. is wound on a roller or beam. The frictional driving power is to be increased as the diameter of the beam increases. This is effected as follows:—As the diameter of the beam 1 increases, the pressure roller 2 on the arm 3 is gradually moved outward, causing the shaft 4 to rotate partially. The beak of the cam 5 forces down the cranked end 7^1 of the lever 6 about its fulcrum 7. The other end of 6 forces, by the clip 8, the collar 9 against the cross spring 10, thus increasing the pressure on the friction plates 11, and augmenting the power which drives the beam. To remove the full beam, the operator turns the roller 2 away from the beam, thus further rotating the cam 5, the beak of which then enters an inclined notch in a plate attached to the lever 6. The lever 6 is thus free to return to its normal position, and the pressure is taken off the plates 11.

Digitized by Google

2316. Wilkinson, A. Jan. 29.

Raw materials, treating; pulp, treating; bleaching; colouring.—Peat, moss, or wood fibre is boiled in a solution of quicklime and soda, and the mass is removed and washed in warm or cold water; it is again boiled with potash, chloride of lime, and quicklime, and sulphuric and acetic acids, and then wrung and dried. To the coloured liquid extracted is added common salt, alum, and a little acetic or muriatic acid, the mixture boiled in an airtight vessel, and alum liquor added. The resulting liquid is used for colouring paper pulp to any shade of brown. For bleaching, the peat is mixed with chloride of lime, quicklime, sulphuric acid, and brimstone, and broken down into a liquid with boiling water. If a further bleaching be required it is acted on by a bleach composed of sulphur, sulphuric acid, soda, chloride of lime, and quicklime. The peat is reduced to a very fine white pulp by adding sulphuric acid, quicklime, and muriatic acid to break down the lumps, and to keep up the strength of the mixture, chloride of lime and hydrochloric acid are added if necessary. Rice or spent rice from breweries &c. is mixed in a pulpy condition with the pulp; china clay and waste cotton fannings boiled with size or starch may also be added, the mass being worked in a paper engine. For waterproof paper pulp, suitable for coverings for damp walls, papier mâché, pasteboard, millboard, and ornamental cabinet &c. work, india-rubber or gutta-percha is dissolved in bisulphide of carbon, benzoline and coal tar naphtha are added, and the mass brought to a liquid in an airtight box, when it can be readily mixed with the pulp.

2701. Abel, C. D., [*Dahl, C. F.*]. Feb. 4.

Raw materials, treating; waste products, treatment and utilization of.—Relates to a process for separating the woody fibres from the non-fibrous parts of plants. The straw, esparto, &c. is boiled under pressure in an iron vessel without lead lining with a solution composed of sulphate, carbonate, hydrate, and sulphide of sodium. After boiling, the lye is let off into iron receptacles and treated for regaining the salts. The lye is evaporated to dryness, calcined, and washed, the solution being used for the next charge of lye. The regained lye is brought up to strength by the addition of sulphate of soda and caustic lime. Existing hydrate and carbonate of soda processes may be gradually converted into the above process by replacing the losses of the hydrate of soda by sulphate instead of carbonate of soda. The fibrous substance is washed after being boiled in the lye, and is reduced to pulp in the rag engine.

2885. Kirlew, R. L. Feb. 7.

Paper boards; pulp, treating.—Asbestos or other millboard is made impervious to the action of acids and of heat and is rendered heavier by impregnating it, while in a state of pulp, with a definite quantity of salt or other chemical substance of like nature.

3013. Dixon, J. Feb. 9.

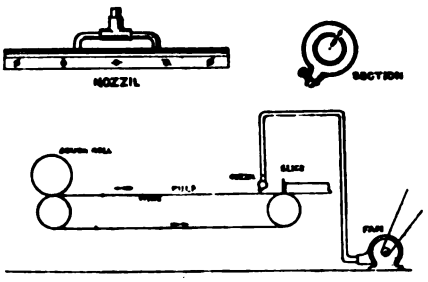

Paper machines, felting pulp in. The object is to effect a more efficient felting of the pulp while on the mould, which effect is obtained by impelling air or other fluid from suitable mouthpieces against the surface of the pulp. The mouthpiece may be adjustable, or the pressure of air &c. against the pulp may be regulated by the raising of the pipe. If desirable, an additional stream may be impelled against the underside of the wire.

3202. Johnson, J. H., [*Blanchet Bros. & Kleber*]. Feb. 13.

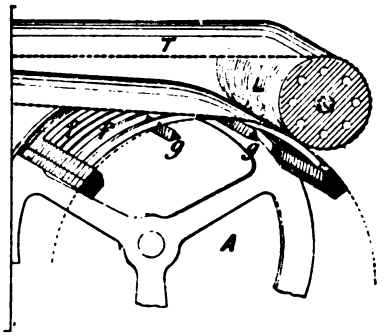

Paper machines; watermarking.—The object is to produce shaded watermarks, such as are used for banknotes &c., in cylinder machines. The making cylinder A is covered with goffered cloths with the required design and may be of the ordinary construction, or it may be built up with curved brass segments *f*, concentric with A's axis and tapering in section towards the exterior, combined with cross-bars *g*, the effect being to make the paper wider. In place of a wet felt a wire-cloth or a calico or fustian fabric T receives the paper and passes round an india-rubber couch-roller L having longitudinal perforations to increase its elasticity. The drying is effected by passage over copper plates heated by steam in casings beneath them, a revolving fan driving off vapour. At the extremity of the machine the cloth passes round a perforated cylinder with an interior fan, a revolving brush detaching the sheets of paper. The returning-cloth is acted on by a scraper and passes over and under rollers and through a trough of water, revolving brushes removing any fragments of pulp from its surface.

Digitized by Google

3780. Dulfus, Baron L. M., [*Ponty, J.*]. Feb. 22.

Fireproof paper, pulp for. The pulp consists of varying proportions of the following constituents according to the nature of the paper or object to be produced :—(1) Asbestos fibre which is crushed, pulverized, and bleached. (2) Bleached "fossil "powder," a substance containing silica, fossil-wood, lime, and iron, which is crushed and pulverized with an equal quantity of neutral silicate of soda ; in some cases this may be replaced by sulphate of alumina or other uninflammable material. (3) A pulp obtained from animal fibre, such as waste silk or other material of similar quality. Sizing may take place before or after the paper is formed, the size consisting of water, kaolin, and neutral silicate of soda in varying proportions, with or without a small proportion of resinous soap. The pulp may be used as an insulating-material for electrical conductors or for moulding ornaments or other objects, in which case a little ceresin is added.

3817. Crossley, J. Feb. 23.

Felts. — Relates to the production of cotton drying-felts having an even joining, for covering papermakers' rollers or cylinders. The felt is woven in such a manner that the edges intended to form the joining are half the thickness of the body of the felt, the half thicknesses being formed at opposite sides of the felt to produce, when overlapped, a flush joining. The joining is completed by splicing the warp ends.

4202. Foulis, J. March 1.

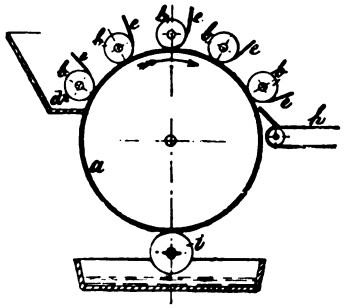

Waste products, treatment of.—Relates to filter-presses for paper-mill sludge &c. The sludge or other matter requiring to be solidified is first heated to coagulate any mucilaginous or albuminous matter, and the semi-liquid mass is passed between rollers arranged to give an increasing pressure. In the Figure the roller *a* is covered with felt, the other rollers being plain. The substance enters at d^2 and during the rolling it adheres to the plain surfaces on *b*, *b*, being removed by the scrapers at *e*, *e*, and passed on by the roller *a* till it is finally carried away by the endless band *h*. The roller *i* is for removing the moisture from the felt. Three alternative methods are described. (1) The central roll *a* is made plain and the small rollers *b*, *b*, &c. are felted. (2) The rollers *b*, *b*, &c. are arranged in a straight line, and similar rollers placed opposite them, the substance being carried forward on an endless horizontal band running between the pairs of rollers. (3) The moisture may be removed by placing the matter in a cylinder which has a felt-lined piston, with suitable channelling and perforations for carrying off the water, the piston being actuated by hydraulic or other power.

4784. Haddan, H. J., [*Holmes, P. H.*]. March 12. *Drawings to Specification.*

Wood, cutting.—Relates to machines for severing fibres for use in the manufacture of pulp &c., the resulting fibres being of uniform length. The machine partakes of the general form of a lathe. The block of wood is rotated and the fibres severed by a reciprocating cutter actuated by a guide screw. A feed towards the block is given by automatic means or by hand. The cutter is grooved at right-angles to its edge so as to practically divide it into a number of cutters, each of breadth equal to the length of fibre required. An automatic contrivance for sharpening the cutter while the cutting operation is proceeding, consists of a flat stone at each side of the block, which rubs the cutter transversely to its edge. The same object may be obtained by cutting grooves into the block, and using a plain cutter. The fibres are received in a trough provided with an endless conducting-belt or an exhausting-fan. Strips of wood may be arranged between two flanges and treated in a similar manner to blocks.

5360. Leishman, W. March 24.

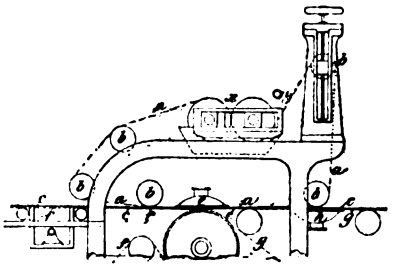

Paper machines.—The object is to prevent the production of the wire mark caused by the upper couch roll on the back of the paper. An endless felt *a* is used in place of the upper couch roll, and passes over guide-rollers *b* and through a cleaning-device *x*. The suction-box *e* draws the layer of pulp *c* from the ordinary wire-cloth *f* and causes it to adhere to the felt *a*. The felt *a* carries it to the first press felt *g*, on to which it is drawn by a suction-box *h*. The pulp web then proceeds through the machine in the ordinary course.

Digitized by Google

5377. Mehner, G. H. March 24.

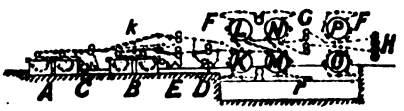

Paper machines.—Two double-cylinder machines A and B are combined as shown with a drying-apparatus F and single wet presses C and D, and with double wet and finishing presses E and G. A dry felt *k* guides the sheet made by A over B to the press E, where it is pressed through the upper pair of rollers and guided to the first drying cylinder K. The sheet from B is pressed through the lower pair of rolls of the press E and passes through D to the cylinder K. Both sheets now pass together, one lying on the other, over the first four drying-cylinders K, L, M, N, being guided by felts so as each to come twice in contact with the heated surfaces. The sheets then pass singly through the upper and lower pairs of rolls of the press G, over drying-cylinders P and O, to the batching-apparatus H. To produce a single sheet of cardboard, the felt *k* is carried round an auxiliary roller in the press E so that the web from A is couched into one sheet with that from B. The machines A and B are furnished with agitators consisting of a number of bars bent concentric to each cylinder and fixed to cross rails which are made to vibrate parallel to the cylinders.

5838. Prinz, A., and **Quellmalz, E.** April 2.

Raw materials, treating.—Mechanically-prepared jute and other materials for paper-making are placed horizontally in receptacles of wood, metal, or masonry and macerated by pouring over them a dilute solution of hypochlorite of lime which dissolves and removes, in a cold state, most of the encrusting matter, especially "jutine" in the case of jute fibre, as well as gluten and ligneous starch. The mass is then strained and treated with caustic alkalies, either boiling and under pressure, or cold; if boiled the fibres are placed vertically in perforated receptacles suspended in the boiling-vat. Benzene, naphtha, petroleum, or sulphuret of carbon may be added as solvents of the resinous compounds. The materials are then washed, bleached, and dried. If a woolly crisp appearance be desired, the fibres are subjected to the cold maceration process with soda lye, and washed with water suitably acidulated.

6012. Imray, O., [*Piette, L.*]. April 5.

Calendering.—The paper-web from the table *a* is guided between and around the calendering-rollers by jets of air, gas, or steam which issue from a series of perforated pipes 1, 2, 3, &c., arranged parallel and near to the rollers.

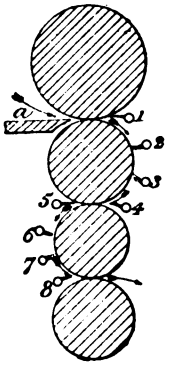

6376. Lake, H. H., [*Pond, G. H.,* and *Morse, E. A.*]. April 15.

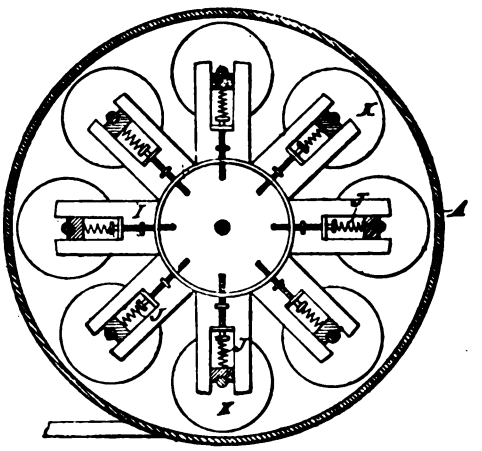

Raw materials, treating; pulping-engines.—Relates to preparing paper pulp having a clear unbroken fibre, from sawdust, chips, shavings, and other kinds of wood and fibrous material. The materials are placed in a vertical cylinder A, water and a little alkali are added, and steam is injected. The mass is worked up by rollers K carried by a rotating frame I. The rollers are pressed against the walls of the cylinder by adjustable springs J. Play is allowed so that the centrifugal force may cause increased pressure. Large and small driving-pulleys are used to obtain two speeds. The cylinder is fitted with a hopper and a steam-tight cover. The cylinder may be arranged to rotate.

7511. Johnson, J. H., [*Fessy, J. B.*]. May 9.

Bleaching pulp. The bleaching-liquids are employed in the form of spray, which may be produced by steam issuing under pressure from a nozzle E within a funnel F. The liquids to be pulverized are supplied to a nozzle O by a pipe L. This pipe has two branches provided with stop-cocks so that the liquids may be combined in any desired proportion. The liquids become thoroughly

Digitized by Google

pulverized and mixed and, issuing from the funnel, are made to act instantaneously on the pulp &c. to be bleached. The following two solutions may

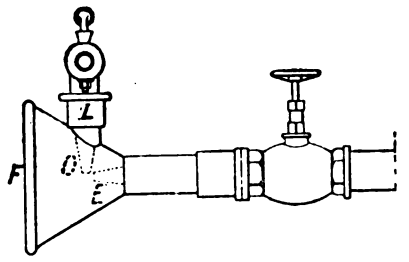

advantageously be employed for bleaching by this process: (1) 1 part of chloride of lime in 100 of water; (2) 2 parts of carbonate of soda in 100 of water at a temperature of 95° to 104° F. Instead of steam any other agent, chemical or mechanical, may be used to produce the spray.

7654. Justice, P. M., [*United States Cotton Seed Cleaning Co.*]. May 13.

Raw materials, treating.— Relates to treating cotton seed to separate adhering fibre after ginning. The hulls with adhering fibre after separation from the kernels are subjected to heat, preferably by passing heated air through the mass, then ground or crushed, and sifted to effect separation of the fibre, which is afterwards used for paper-making.

8154. Lake, W. R., [*Marshall, G. E.*]. May 23.

Driving-mechanism for paper-making machines. The various cylinders are driven from an overhead shaft. Each cylinder is provided with a countershaft on its own level, which carries a bevel pinion gearing with a corresponding wheel on the shaft of the cylinder. The overhead shaft is driven from the main driving-shaft through two pairs of cone-pulleys, and each countershaft is driven from the overhead shaft through a pair of cone-pulleys G, G¹. Each strap is provided with a strap-shifter *a*, the arms of which extend up and down from a sleeve slid horizontally on a shaft by a screw and hand-wheel *f*. "Washers" are driven from the main driving-shaft by friction rollers pressed together by a screw. By these means short cones and narrow straps may be employed, the speed of each roller may be varied without stopping the machine, and the danger to the attendant is reduced.

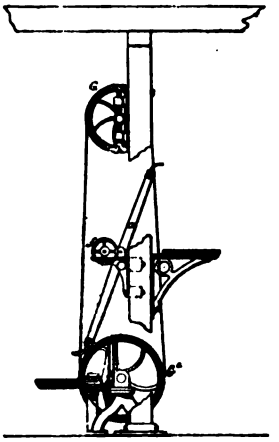

8348. La Rue, W. W. de. May 28.

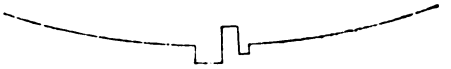

Watermarking.—The dandy-roll is of gauze and is embossed in such a manner that the parts corresponding to the configuration of the design project from the surface of the roll, while the parts corresponding to the shading are depressed below the surface. This causes a thinning of the paper at the outline of the design, and a thickening at the shaded parts. Auxiliary ridges intensify the shading lines. Other effects may be obtained by wires on the unembossed surface of the roll or on the ridges. The ridges may be formed by sewing suitably-shaped strips on the surface of the roll instead of by embossing.

9059. Johnson, J. H., [*Flinsch, F.*]. June 17.

Drying.—Relates to apparatus for drying sheets of paperboard, pasteboard, and like material, which have been pasted together or coated with colour &c. The sheets are fed from an endless apron 38 on to trays G propelled by projections 3 from endless chains 40 which engage with pins 4 projecting from the sides of the trays. The trays are received into compartments, one over the other, in cages such as T

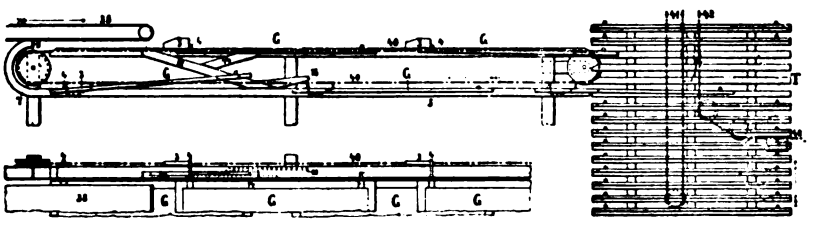

Digitized by Google

which are raised vertically by means of projections from chains 41, and passed horizontally, by various chains, such as 42, running at suitable speeds, through a drying-chamber. The cages having been returned along lower guides, the trays are withdrawn by the return movement of the projections 3 on the endless chain 40. By means of the curved guides 7, 8, and switches 12, 13, 14, the trays are restored to their original level under the apron 38. The trays may be taken backwards and forwards through the drying-chamber more than once before being withdrawn from the cages by the projections 3.

9091. Johns, H. W. June 17.

Materials, fibrous.—Consists in employing asbestos pulp, solely or in conjunction with other materials, in the production of paper, paperboard, &c., having a design embossed or built up on its surfaces.

9509. Pitt, S., [*Pictet, R. P.*, and *Brélaz, G. L.*]. June 27.

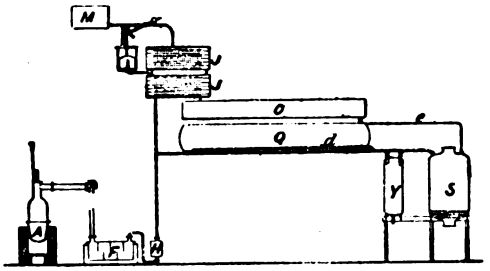

Raw materials, treating.—Wood is subjected to the action of a supersaturated solution of sulphurous acid. This may be effected by filling a closed vessel with water and chips of wood and pumping in free sulphurous-acid gas, or the following process may be employed:—Sulphurous acid, from a still A, is passed through drying-vessels F and H into a system of boxes J, J, where it is dissolved in water which falls in streams over a number of partitions. The delivery of water from the reservoir M is regulated automatically. The solution passes through a lead-lined reservoir O to a similar one Q. The lead-lined vessel S is filled with a weak solution and heated, the gas disengaged being passed into a safety vessel Y (where all liquid is deposited), and delivered under pressure through a perforated tube *d* into the solution in the reservoir Q. When this is of proper density, the gas remaining in S is conducted into the boxes J. The wood is placed in S and the solution from Q introduced under pressure through a pipe *e*, the operation being assisted by first producing a vacuum in S. The temperature need not be more than 100° C., with a pressure of 5 to 6 atmospheres, so that the encrusting substances are not decomposed during the operation. Successive operations can be carried on with the same liquid, the solution from one boiler passing into another. The treated wood is subjected to hydraulic pressure to remove residual liquids, which liquids are found to contain resins, tannin, &c.

9723. Barlow, S. July 3. *Drawings to Specification.*

Compound paper.—Paper and cloth are united by means of an adhesive to form a compound material for bookbinding and other purposes.

9774. Reid, T. A. July. 5.

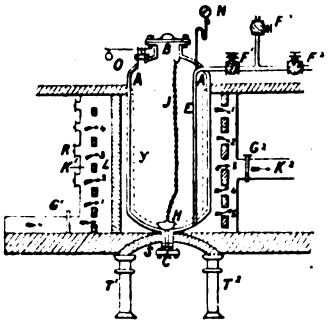

Boiling pulp. Relates to a digester for treating wood, straw, and the like. The wrought-iron cylinder A is heated by gaseous fuel passing through a damper to a flue K^1. This flue is carried round the cylinder or digester A, and is provided with perforations 1, 2, 3, &c., through which the gas is drawn, being then, by the column of brickwork L, diverted round the digester to the other side, where it passes through similar perforations and out at K^2 through the damper G^2. The supply of air to the gas during combustion is regulated by slides R. The digester is charged through a manhole B, and may be emptied through a pipe C. The valve H, resting on a seating in the perforated jacket *y*, may be raised by a chain J. O is a safety-valve and N a pressure gauge. The pipe E, with valves F^1, F^2, F^3, is for supplying the digester with the disintegrating-fluid or for blowing off the spent liquor from the digested stuff. The digester is set upon the arch S, supported by columns T^1 and T^2.

9797. Behr, A. July 5. *Drawings to Specification.*

Raw materials, treating; waste products, treatment of.—Relates to a method of, and apparatus for, preparing cellulose and glucose from wood and other vegetable material. The wood &c., freed from bark and pith, is cut up and dried. If necessary, oil of turpentine is removed by

Digitized by Google

distillation in a steam-jacketed cylinder containing a stirrer, the oil being condensed in a cooler and conducted to a tank. The wood is then dried and transferred to a steam-heated digester in which it is treated with oil of turpentine or fusel oil to extract the resins. Any vapour escaping is condensed in a cooler and flows to the oil tank. The frothy mass is, after a time, conducted to an extractor, through the perforated bottom of which the solution of resin and oil passes, or is forced by steam to a collecting-pan. Here the resinous and aqueous solutions separate, any vapourized oil being condensed in a cooler. The resinous solution is pumped off and distilled, the distillate passing through a cooler to the oil tank, the residue being cast in moulds. The aqueous solution contains carbohydrates and is drawn off to a pan. The cellulose remaining in the extractor is transferred to a steam-jacketed glucose boiler where it is agitated with dilute sulphuric acid. The mass is then conducted back to the extractor, where it is cleansed by steam. The acid fluid contains glucose, and is run off to the pan containing the aqueous solution mentioned above. The cellulose is now ready for bleaching. The waste pith and bark are boiled and stirred with sulphuric acid in the glucose boiler together with the carbohydrate solution; the mass is then thinned with steam and water and conveyed to the extractor, from which the glucose solution is drawn off to a vat. For inferior cellulose the wood, when cut up, is transferred direct to the extractor, in which the resin, oil, &c. are driven off by high-pressure steam. The mass is then heated in the glucose boiler with dilute acid as before. A number of extractors may be employed so as to utilize fully the steam, which is made to pass successively through the whole series.

10,240. Wilkinson, A. July 16.

Materials, fibrous; raw materials, treating; bleaching.—Peat, hay, spent hops, brewers' grains, waste cane, or other fibrous bodies are boiled in a solution containing "potassium," soda, potash, sulphuric acid, ammonia, and brimstone. The fibre is then washed in a warm liquid containing ammonia, acetic acid, tungstate of soda, and soap, after which it is boiled in a strong alkali composed of soap, soda, sulphur, and ammonia. The material is then bleached in a closed stove in which is burnt a mixture of sulphur, bisulphide of carbon, and ammonia, or it may be submitted to a bleaching-solution of chloride of lime, soda, sulphur, potassium, and ammonia. The material thus prepared is fit for the manufacture of millboard or paper either alone or mixed with waste flock or cotton fannings. A method of coating canvas with this material for book covers and like purposes is described.

10,409. Boult, A. J., [*Coburn, L., Coburn, J. C.*, and *Taylor, C. F.*]. July 21. *Amended.*

Rags, cutting-up.—Relates to machines for cutting-up rags and the like for paper-stock. The rags are spread on the feed apron *a* and passed between two sets of cutting-discs *b*, with roughened peripheries, each projecting into the spaces between the discs of the opposite set;

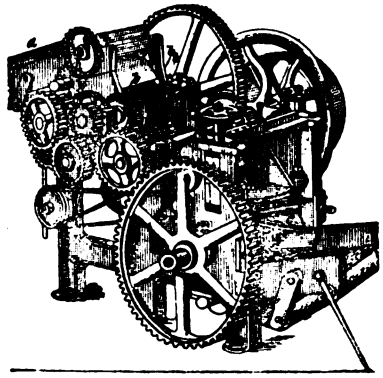

these cut the rags into strips which fall on to a travelling apron, and are fed between a spiral cutter *c* and an adjustable straight cutter. The shearing action of the straight cutter cross cuts the strips. A machine may be arranged with two spiral cutters, one to strip and the other to cross cut the rags, or with two pairs of sets of disc cutters; in the latter case the intermediate travelling apron is swivelled.

10,585. Day, St. J. V., [*Swan, P. S.*]. July 25.

Packing and wrapping-up paper.—Sacking or like cloth is covered with sufficient paper pulp, mingled with size to make it adhere, and form a skin or coating; it is then passed through the pressing, drying, and polishing rollers of a paper-making machine. One or both sides of the cloth may be papered.

11,177. Johnson, J. H., [*Hoyt, J.*]. Aug. 12.

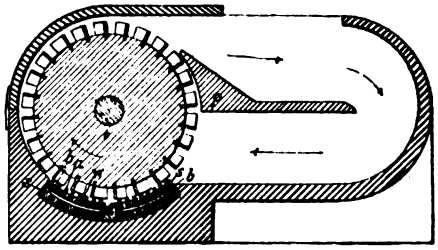

Rag-engines.—Relates to a rag-engine where the circulation is in vertical planes. The Figure shows a vertical section. The bed-plate is composed of a number of knives *a* secured in a shoe *s* by wood wedges *w*, a central iron wedge, and curved rivets *b*, *b*. Suitable openings, with filling-up pieces, are made in the side plates for the insertion and withdrawal of the knives. P shows the horizontal partition.

Digitized by Google

11,333. Lunge, G. Aug. 16.

Bleaching paper pulp, the invention being described with reference to fabrics. In bleaching fabrics, acetic acid, or other analogous weak organic acid, is used with chloride of lime, for the purpose of liberating hypochlorous acid. The chloride of lime and acetic acid are applied to the fabric to be bleached in any suitable manner. The reactions taking place are represented by the following equations:—(1). $2\ CaOCl_2 + 2\ C_2H_4O_2 = Ca(C_2H_3O_2)_2 + CaCl_2 + 2\ HOCl$. (2). $2\ HOCl = O_2 + 2\ HCl$. (3). $2\ HCl + Ca(C_2H_3O_2)_2 = CaCl_2 + 2\ C_2H_4O_2$. Hypochlorous acid is first produced, which yields its oxygen to the fibre; while the hydrochloric acid liberated immediately attacks the calcium acetate obtained in the first reaction and regenerates acetic acid. Consequently, a small quantity of acetic acid is theoretically sufficient for a large quantity of chloride of lime. In this process chlorine, which has an injurious effect upon the fibres, is not produced; and since there are no insoluble calcium salts formed, the usual subsequent processes of souring and washing are dispensed with, and the expense of acid for souring is avoided, as well as the damage to the fabric due to its use. When hard waters or impure bleaching-powder are employed, it is advisable to use sufficient mineral acid for neutralizing the limes, thus economizing the consumption of acetic acid.

11,389. Fry, G., Ransome, A., and Wilkie, T. J. Aug. 18.

Wood, cutting.—Wood is cut into laminated pieces suitable for boiling for the manufacture of paper pulp. A number of steel chisels or cutters *a* are secured on a revolving disc A in such a manner as to act successively on the log or plank B to be cut. Each cutter protrudes through slots in the disc with its short bevelled side towards the wood and nearly parallel to the disc, while the other side meets the wood approximately at right-angles to the grain. The chips cut off pass between the cutter and a throat-plate *b* and away through the slot. The cutters are fixed on a part only of the disc, the wood being fed forward when the cutting ceases. To prevent the wood from splitting off at the side in the direction of the grain during the action of the last cutters, the apparatus is arranged so that one or two of the cutters first act on one side of the wood and then those on the opposite side begin, so that the completion of the cutting action occurs at some distance from the edge of the wood. The wood is carried on rollers on a gantry and is fed forward by a serrated feed-roller which derives a step-by-step motion from a ratchet-wheel actuated by a connecting-rod and crank. The latter is mounted on a shaft driven by bevel gearing from the shaft on which the disc A revolves.

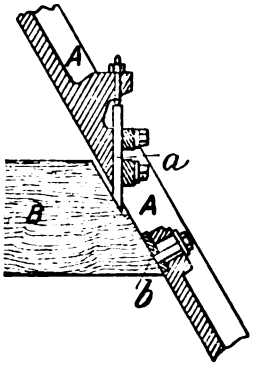

11,651. Francke, D. O. Aug. 26.

Boiling. — Boilers for wood pulp and other vegetable fibre are made lead-lined, the lining *a* being held to the iron or steel shell A by internal rings *b*, *b* sprung outwards by wedges *c*, *c*. Small holes *d*, *d* provided with taps let out air from between the shell and lining, and also serve to localize faults in the lining. The boiler is heated by steam introduced through perforated pipes *p*, *p*; by this means the quantity of sulphate found in the pulp is reduced. The boiler is rotated on trunnions, and is provided with a sample cock, the passage to which is lead-lined.

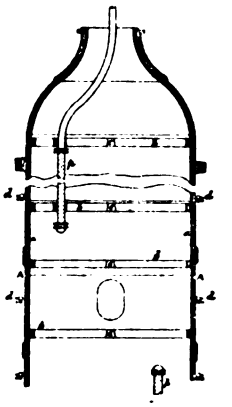

11,655. Mitscherlich, A. Aug. 26. *Drawings to Specification.*

Raw materials, treating; boiling; waste products, treating:—Wood and the like is cut up into discs or slabs of a moderate size, the bast fibres and cores being removed. Sawdust is distributed in heaps amongst the pieces of wood in the sulphite boiler. The latter is provided with manholes, on the covers of which all the fittings are placed, the joints being packed with cellulose paste. To prevent the heating-pipes from becoming choked, a higher pressure is maintained in them than in the boiler. Bursting of the boiler is prevented by allowing space for expansion. A lining of brickwork is used in addition to the lead lining. The waste liquors are discharged into a covered tank where they meet with cold liquors and are led off to a stream of water of about a thousand times their volume, being thus rendered harmless.

11,732. Rhodes, B. Aug. 28.

Paper boards for joint-making. A sheet of asbestos paper or millboard, alone or with a strengthening-layer of a woven fabric of asbestos and cotton, is perforated or indented and saturated with an adhesive solution. It is then placed between two sheets of a substance described in Specification No. 1334, A.D. 1879 (consisting mainly of asbestos, caoutchouc, and shellac), and passed between heated rollers, by which means the outer sheets are pressed into the inner sheet and thoroughly incorporated therewith.

Digitized by Google

11,759. Biggin, T., and Elliott, G. Aug. 29.

Rag-engines. — The bottom plate is made with dividers B of the same thickness and quality as the bars A, so that when the latter become worn the dividers can be raised and used as bars; and when the dividers become worn they can be lowered and the original bars used again. To effect this the dividers are made with holes D as shown, or with sets of two separate holes one over the other, and corresponding holes are made in the bars. The bars and dividers can thus, by means of bolts E, be secured in the required positions.

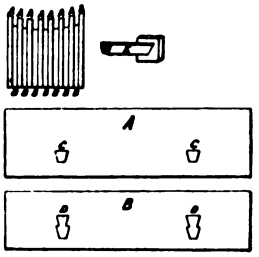

11,816. Mitscherlich, A. Aug. 30.

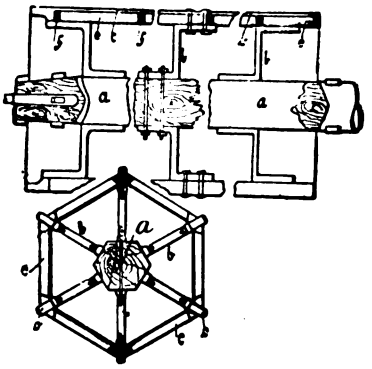

Strainers; pulp, treating.—Relates to a method of straining pulp and drying it for conveyance. The pulp is very largely diluted with water and conducted very slowly through long and wide channels provided with partitions between which are removable trays in which impurities collect. The liquid then passes through vats and is delivered on a sieve which has a slow up-and-down motion. The water and fibres flow through, any impurities remaining floating on the liquid or deposited on the sieve. The liquid then flows to a centrifugal drying-apparatus consisting of a shaft *a* with arms *b* and fixed bars *c*, forming the framework of a drum open at each end, the sides being formed of wire or hair screens. When hair screens are used, frames *e* and bars *f* are provided for support. The whole rotates rapidly, the fibres adhering to the inside of the screens while the water and impurities pass through the meshes to a receptacle below. The pulp is again diluted with water and conveyed in a thin layer on an endless sieve, through which the water is drawn off. The loose material is then perfectly dried by passage over heated cylinders, and afterwards pressed, by which process felting is prevented. In the case of sulphite cellulose, the iron parts of the apparatus should be covered with wood, linen, or the like, or a free acid or soluble acid compound should be added to the water used in order to prevent the discolouration of the material.

11,877. Southmayd, J. A. Sept. 2.

Raw materials, treating; boiling; bleaching. — Relates to a process and apparatus for reducing vegetable tissues to fine fibres for the production of paper pulp. The material is partially disintegrated by boiling in alkali, and is forcibly ejected from the boiler to complete the disintegration. A is the boiler tapering towards the bottom, B a cock through which the mass is forcibly ejected by steam issuing from pipes D, D, by which means also the boiler is heated. The mass is agitated by opening the cock C^1. L, L are trial cocks at different levels, N, N steam pipes, and M the receptacle. Bleaching is effected by drawing off the lye at E and completely filling the boiler with a liquor containing chlorine. After boiling, a portion is drawn off; by this means and by the application of heat chlorine is liberated and washings are rendered unnecessary. The mouth of the pipe E is covered by a strainer *e* kept clear by a steam jet from a pipe *f*.

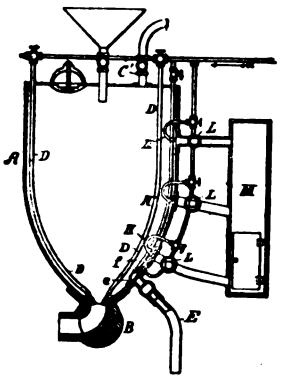

12,152. Lehmann, A. Sept. 8.

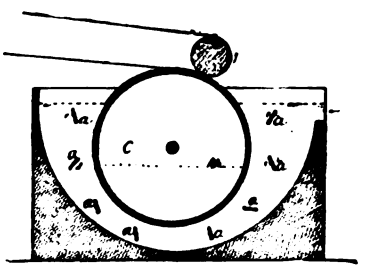

Paper machines.—To effect the interlacing of the pulp fibres which form the sheet, a number of agitators *a* are placed around the wire cylinder C in the case of cylinder machines, or in the vat, just before or where the pulp flows on to the wire web, in the case of ordinary machines. These agitators act on the principle of the screw propeller, and are made half right and half left handed, so that the

Digitized by Google

fibres are stirred in oblique directions, crossing and interlacing with each other, a well-felted layer being thus deposited on the cylinder or endless wire.

12,193. Knowles, C. W. Sept. 9.

Weighting pulp.—Sulphate of lime is prepared for use in paper-making and analogous purposes by acting in the following way on any of its natural forms free from earthy impurities. It is first reduced in a crushing-machine and then ground in a suitable mill to a very fine powder, and calcined. The material may be screened of impurities both before and after the calcination, but generally only after it. The powder is mixed with about ten times its weight of water, and agitated therewith for about 30 to 45 minutes. The mixture is immediately afterwards passed through a screen of the finest gauze, and then run into a container or receiver, and before it has had time to settle is forced through a filter-press. The solid cakes are removed and subjected to a drying process in a heated room or kiln, and packed for removal.

12,346. Lake, W. R., [*Storey, C.*, and *Marshall, G. E.*]. Sept. 12.

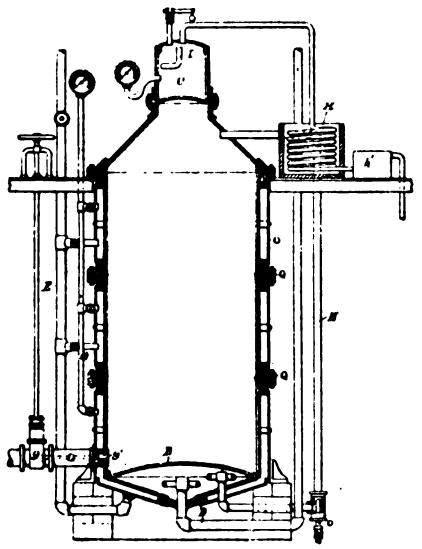

Boiling.—Wood is boiled with sulphurous acid mixed with magnesia or lime in various proportions in a digester heated by steam in a surrounding jacket. D is a pipe supplying steam to the interior, and B a perforated false bottom. To prevent the formation of sulphuric acid a condensing-worm H is in open communication with the dome C of the digester; h^1 is a trap connected with H. The digester is provided with a blow-out pipe I which also passes through a condensing-coil; the condensed acid is mixed with any suitable base in an adjoining vessel. E is a steam pipe supplying the jacket, and G a discharge pipe provided with a plug g^1 and valve g. Circulation is maintained by a pipe N into which steam is injected by a pipe O. The digester is built in sections of boiler iron with flanged iron joint rings Q. The lining is applied to each section separately, a suitable metal being run between the turned-up edge of one and the bevelled edge of the other; or the lining may be bent over the flanges.

12,379. Kingsford, C. Sept. 13.

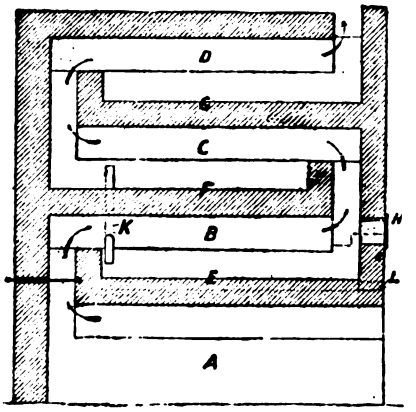

Waste products, treatment of.—The waste gases from coke ovens and furnaces are utilized for the recovery, by evaporation, of the soda that has been used in the manufacture of paper. The flames, heated air, &c. from the furnace A pass along flues B, C, D over trays E, F, G in which the substances can be placed. The trays are thus heated both from above and below. A manhole H is provided for removing solid substances from E, and overflow pipes such as K are fitted, so that, when any tray is nearly full of liquid, the one below begins to fill. The lowest tray has exit pipes L for removing its liquid contents.

12,385. Clark, W., [*Guichard, E. A. D.*]. Sept. 13.

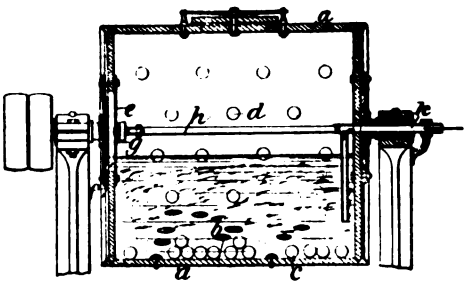

Bleaching.—The waste paper to be bleached, whether printed or written on, is placed in a

Digitized by Google

revolving wooden drum *a* together with the bleaching-liquid and a number of flat pebbles *b* and balls *c* of stone, metal, or other suitable material. The interior of the drum is studded with bosses *d*. On turning the drum by hand or other power a simultaneous frictional and crushing action is produced, and when the liquid is nearly black it is drawn off and replaced by a fresh supply, and so on, till the mass is completely bleached. Any kind of bleaching-liquor may be used, but a mixture of turpentine, soap, and bleaching-fluid is preferably employed. A grating *e* is fixed over the outlet *f* to prevent the choking of the latter, and is cleaned by a brush *g* fixed on a rod *h* supported at one end in the hollow inlet pipe *k*. In a modification of the apparatus, the inlet and outlet are arranged at one and the same end of the drum.

12,427. Routledge, T. Sept. 15.

Boiling.—Relates to boilers or digesters used in the manufacture of materials for paper-making when acid solutions under high pressure or temperature are employed. Instead of making such vessels with a separate lining they are constructed entirely of lead, either alone or with the addition of antimony or other suitable metal for hardening it.

12,566. Mitscherlich, A. Sept. 18.

Sizing.—The sizing is effected by precipitating glue or resin-soap by means of fluids containing tanning-materials which precipitate glue, a paper that is easily soluble in water being obtained. In the resin-soap process the fluid containing the tanning-materials is first thoroughly mixed with the pulp in the rag-engine and a clear solution of resin-soap is gradually poured in and stirred with it. When glue is employed the pulp is first acidulated, and a jet of the tanning-material is fed in continuously from one side of the rag-engine, while the glue solution is injected from the other side. The solutions are mixed as much as possible by the action of the engine, and the mass is rapidly diluted. By these processes a glutinous precipitate is formed on the smallest particles of pulp.

12,732. Townsend, R., and **Townsend, A. W.** Sept. 24.

Bleaching.—Relates to a process for treating paper pulp of vegetable origin with a solution of one or more of the oxychlorides of magnesium, barium, strontium, potassium, or sodium. The material is steeped in the solution at ordinary temperatures, but the process may be hastened by raising the temperature. No acid is used, and no "souring" process is necessary. The solution is obtained by dissolving the previously-prepared salt, or by mixing bleaching-powder (chloride of lime) with the sulphate of one or more of the bases above mentioned and separating the precipitated calcium sulphate.

12,744. Thompson, W. P., [*Bachmann, L. G.*]. Sept. 24.

Waterproof paper.—Cartridge shells, wads, &c. are made of a special paper, which, although thin and transparent, is very dense and quite impervious to damp. The paper is prepared from pure cellulose, without size, and after being treated with sulphuric acid is well washed and pressed in order to remove all traces of acid. After washing, the sheets of paper are dried, calendered, and surfaced under very heavy pressure.

13,256. Lake, H. H., [*Foley, W. J.*]. Oct. 6.

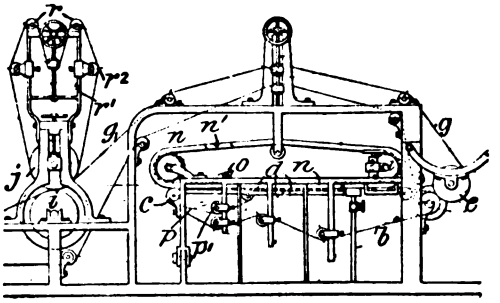

Paper machines.—Relates to a method of producing successive sheets of paper in place of a continuous web. At suitable intervals along the deckles *n* are arranged transverse bars or deckles n^1. In this way a series of separate compartments are formed by the contact of the side and cross deckles with the endless wire *b*. The pulp flows from a trough *o* into the first of these compartments at the left of the deckle frame. An endless elastic apron *p* is supported by rolls *c* and p^1 and by part of the tubular wire-supporting rolls *d*, in such manner as to be carried underneath the wire and serve as a movable bed at the forming-space. The successive sheets are transferred at the couch roll *e* to the felt *g*, by which they are carried between the press-rolls *i* and *j*. To prevent the sheets from adhering to the roll *j* an endless felt *r* is provided, travelling round the said roll and round rolls r^2 in the frame r^1.

13,929. Johnson, J. H., [*Hermite, E.*]. Oct. 21. *Amended.*

Bleaching pulp. This process consists in the employment of the chemical reactions resulting from the electrolysis of solutions of chlorides of magnesium, calcium, or aluminium, preferably the first, in bleaching textile fabrics, yarns, thread, paper pulp, and the like. The apparatus consists of brickwork troughs cemented internally and surmounted by a framework supporting rollers for carrying the materials to be bleached, or supporting rods from which the materials may be suspended. This frame is suspended by a chain from a pulley, to which an alternating motion is imparted by an

Digitized by Google

eccentric so as to shake up the goods in the liquor; a crane serves to raise and lower the frame. The troughs contain the solution to be electrolysed, and immersed therein are the electrodes constructed

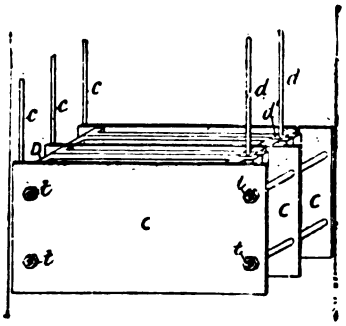

as shown. The negative electrodes C are preferably zinc soldered to copper rods c, which are connected with the main circuit and suitably insulated from the liquid. The positive electrodes are plates of platinum carried in a wooden frame D and soldered to copper rods d connected with the main circuit, the joint being insulated by a suitable compound in the cavity d^1 and the rod by india-rubber. The electrodes are braced together by bolts t. A switch is provided for reversing the current and detaching any deposit on the plates. The electrolytic decomposition of the solution causes a series of reactions, whereby bleaching-liquids are produced which oxidize the colouring-matters of the fibre and continually reproduce the original solution. The bleaching-liquid is in some cases prepared in advance and collected in a separate bleaching-vessel, whence it is pumped back to the troughs when exhausted, to be again electrolysed. For bleaching paper pulp several methods of operation and combinations of apparatus are described.

14,071. Makin, J. Oct. 24.

Boiling.—Relates to means for coating paper-pulp boilers with lead. The plate or vessel to be coated is perforated with a number of holes and placed in a suitable mould, the lead is run in, and a coating thus formed on both sides of the plate, the coatings being connected by the bolts of lead formed in the perforations. When one side only is to be coated the metal has the perforations on the reverse side enlarged, when the lead runs into the holes and forms "rivets." Instead of casting the coating, a sheet of lead is placed beneath the metal and the plugs or rivets formed by running lead or solder into the holes.

14,101. Wise, W. L., [*Escher, Wyss, & Co.*]. Oct. 24.

Strainers for pulp. The pulp is delivered from a channel R on to an inclined slotted plate P secured to the walls of the box K, K_1. The fine pulp passes through this plate, while the impurities and coarse pulp flow down the plate through a slot a^1 into a channel or gutter A, from which they are carried away through an outlet by the aid of injected water. A fan valve H, driven from a

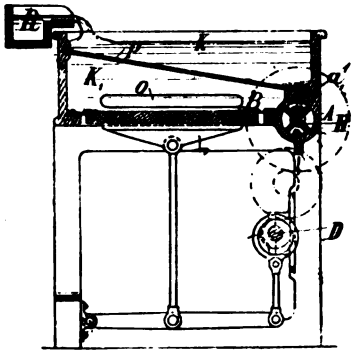

shaft D, intermittently cuts off communication between the channel and the strainer-plate P; other devices for effecting this object are described. The passage of the material through the plate P is facilitated by constant agitation, which may be produced by the rapid vibration of an elastic water-tight bottom B or of a flat diaphragm or piston working beneath the plate P. The outlet for the pulp is shown at O. The apparatus may be constructed with some of its parts in duplicate, and the plate B may be curved or vertical.

14,735. Young, T. G., and **Pettigrew, J.** Nov. 8.

Raw materials, treating; boiling.—Relates to processes for treating vegetable substances, such as wood, esparto, &c. to obtain pulp for making paper &c. The substances are boiled with a solution of nitrous acid. After a time the liquid is run off, and the residue washed and then boiled with a solution of an alkali or alkaline earth or salt. This last process may be hastened by boiling under pressure.

14,754. Galloway, C. J., and **Beckwith, J. H.** Nov. 8.

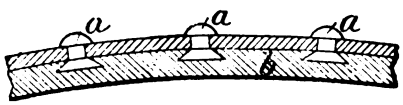

Boiling.—Iron or steel pulp boilers have internal dovetailed projections or holes around or into which the molten metal passes and is secured. In the Figure the rivets a are shown projecting into the vessel, and the molten metal b is run round the inwardly-projecting parts.

Digitized by Google

14,859. Vessier, H., and Wilbaux, A. Nov. 11.

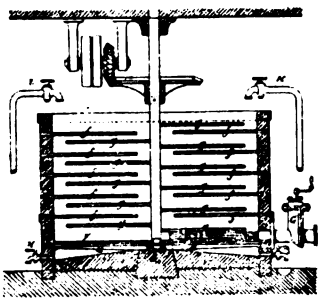

Raw materials, treating; pulp, treating.—Fibrous plants or textile materials are steeped in a cold solution of caustic soda, and then triturated by millstones or in a beating-trough or washing-engine. The pulp is afterwards washed, whitened, and rinsed successively in a cylinder D containing fixed and revolving arms *f* and *g* and a perforated straining-plate F continually cleaned by a caoutchouc strip. Water and chemicals are supplied by cocks K and L and drawn off at H and I. The pulp is drawn off at G and bleached by a mixture of the chlorides of lime and sodium.

14,881. Hawthorn, J., and Liddell, J. P. Nov. 12.

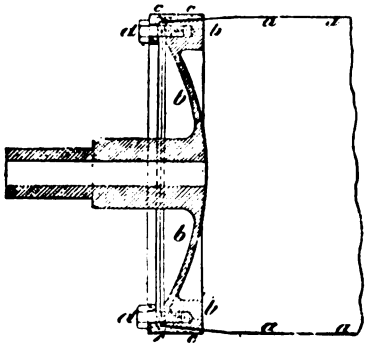

Drying.—Relates to drying-cylinders for use in paper manufacture. The cylinder *a* is made slightly conical near the ends, and is clamped by means of screws *d* between the conical periphery of the end *b* and an external metal ring *c* with conical internal surface. Solder &c. may be used, if necessary, to make the joint steam-tight.

14,988. Young, T. G., and Pettigrew, J. Nov. 14.

Raw materials, treating; boiling.—Wood or other suitable vegetable substance is boiled with a solution of nitric acid. After a time the liquid is run off, and the residue is washed and then boiled with a solution of an alkali or alkaline earth or salt. This last process may be hastened by boiling under pressure.

15,119. Grünert, E. O. Nov. 17.

Transparencies are made from paper pulp, in which lights and shades are produced by different thicknesses of the material. Paper pulp, preferably a mixture of silk-paper stuff and blanched straw stuff, is supplied to an electrotype mould in suitable quantity, being directed by a brush, and all the deep parts of the mould are filled up therewith. The upper surface is then covered with gauze and thick felt, and the whole is pressed and heated until dry, when the paper leaf is removed.

15,819. Hopkinson, J. A., and Hopkinson, J. Dec. 1.

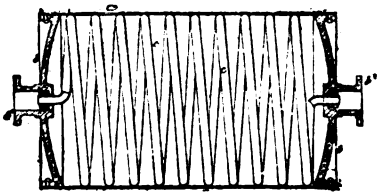

Drying; calendering.—In drying or calendering cylinders the steam or other heating-agent is confined within an internal tube *c* which touches the inside of the cylinder *a*, and thus strengthens the latter against external pressure while relieving it from internal pressure. The tube may be of spiral form as shown, so that, by revolving with the cylinder, it discharges any water of condensation through one of the hollow trunnions *b*'. An inner concentric shell is sometimes provided, forming an annular space in which is fitted the spiral tube. Instead of a spiral a corrugated tube may be used, which may in some cases be perforated, or the cylinder itself may be perforated. The cylinder ends *b* are dished or flanged plates suitably secured in place as shown. The strength of the apparatus permits the use of steam at very high pressure, and of cylinders of large dimensions or thin materials.

15,961. Hickisson, J., [*trading as* the daughter of J. Bond]. Dec. 4.

Pulp, treating.—Relates to mordants or fixers for use in connection with marking-ink pencils or points, the said mordants being used in the manufacture of paper or cardboard by incorporating the same therewith, so that in using the paper or cardboard it is only necessary to damp it prior to applying the pencil or point thereto. The mordant consists of pyrogallic acid mixed

Digitized by Google

with two or more of the following ingredients :— Borax, hyposulphite of soda, carbonate of ammonia, alum, washing-soda, or other salts or acids, and clay, gum, starch, and water or other suitable solvent.

16,186. Albutt, A., [*Fellner, A.*]. Dec. 9.

Boiling.—In making cellulose from wood, the latter is roughly disintegrated and is treated in a suitable boiler with a lye consisting of a mixture of solutions of the bisulphites of magnesium and calcium, such mixture being of a density of from 10° to 20° Bé. A temperature of about 150° C. is maintained during the process. To prepare the lye, a tower is filled with pieces of magnesite or dolomite and calc-tuf, a stream of water flowing slowly down through the mass, while gaseous sulphurous acid is passed up from beneath.

16,428. McDougall, I. S., and **McDougall, J. T.** Dec. 13.

Boiling.—The object is to strengthen sheets of lead used for lining iron or steel vessels for boiling paper pulp. For this purpose strips or wires, interwoven or crossing each other as in wire-cloth sieving, wirework, lattice-work, or any equivalent, previously coated with lead if necessary, are embedded into one or both of the surfaces of the sheet of lead, or between two separate sheets, in any convenient manner, by hammering, pressure between rollers, or casting. If the strengthening-material be of a soft malleable metal, such as copper, brass, zinc, or tin, it may be supported in a mould and the lead cast round it, the whole being afterwards rolled in the ordinary manner. India-rubber may also be used for this purpose. The sheets of india-rubber are placed between the layers of metal, the subsequent heat and pressure of the boiler rendering them cohesive. In other cases the india-rubber is dissolved in a suitable liquid and applied in a liquid or pasty condition. Joints are strengthened by placing over them a strip of gauze, wire netting, or the like, and then burning or melting the lead over the joint.

16,429. McDougall, I. S., and **McDougall, J. T.** Dec. 13.

Boiling.—The object is to provide a firm lining of lead for boilers for making pulp from wood &c. For this purpose sheets of woven wire, perforated metal plates, metal framework, &c., made of the same shape as the interior of the vessel to be lined, are supported at a short distance from its inner surface, and by the assistance of a removable inner core of wrought or cast iron the lead is cast on both surfaces of the strengthening-material.

16,891. Hodges, S. H. Dec. 24.

Paper machines.—In cylinder machines a rotary or other pump communicating by pipes with each side of the vat is employed in such a manner as to cause a current of pulp to flow across the face of the cylinder at that part where suction occurs. The fibres thus become well agitated, and a sheet of almost uniform strength is obtained. In the case of leatherboard and millboard, which consist of more than one layer, the pulp is made to flow in alternate directions across the cylinder for each successive layer taken up by the machine. To effect this, the pulp from the vat is pumped into a box in the side of which are holes communicating by piping with the opposite sides of the vat and opened and closed alternately by an automatic sliding cut-off valve.

16,961. Thomson, R. M. Dec. 27.

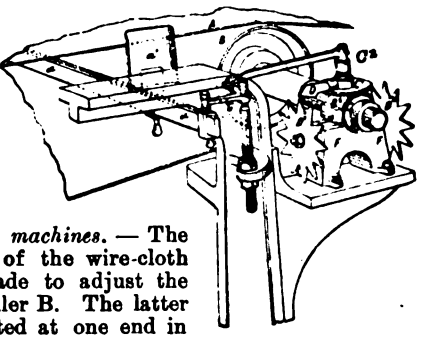

Paper machines. — The shifting of the wire-cloth A is made to adjust the guide-roller B. The latter is mounted at one end in sliding bearings B^2, which are moved in either direction upon the block F by means of a screw operated by the star-wheels D^1, D^2. On the spindle of the guide-roller is mounted a bevel pinion which engages with another C^1 on a short spindle C^2, capable of being oscillated to a slight extent by the levers which are operated from the fork a, a^1. An arm D acts upon one of the star-wheels according to the direction in which the wire-cloth moves the spindle C^2, and thus adjusts the bearings of the guide-roller as required.

17,056. Ricci, R. S. M. de. Dec. 31.

Papier mâché is manufactured in plates of any convenient size in the following manner :—Sheets of paper pulp are alternated with layers of wires or tapes and some fibrous material such as hemp. The whole is then subjected to hydraulic pressure and coated with tar or india-rubber solution. It may be used in the manufacture of life or torpedo boats, armour, gun shields, and for many other similar purposes.

Digitized by Google

A.D. 1885.

27. Johnson, J. H., [*Blanchet Bros. & Kléber*]. Jan. 1.

Wire-cloths. — Relates to wire-cloth whereby either plain laid or ripped paper or laid or ripped and shaded watermarked paper may be obtained. The cloth is made with a number of parallel wires held by and interwoven with finer wires forming the body of the cloth, the said parallel wires forming an integral part of the whole. The cloth may be employed alone or in combination with wires secured by binders in the usual manner. The depressions and elevations necessary to produce a watermark may be made on the cloth by suitable dies or formers.

---

476. Boult, A. J., [*Munzinger, A.*]. Jan. 13.

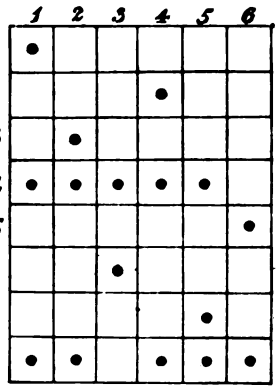

Felts. — A thick cotton warp and a mixed woollen and cotton weft are woven in very strong power looms, the "mounting" or "tuning" being arranged as shown in the Figure for six leaves. The width of the fabric is afterwards reduced by fulling.

1412. Hartley, W. Feb. 2.

Calendering and pressing.—Relates to apparatus for calendering paper, cardboard, millboard, paper wads, &c. A calender with three rolls A, B, and C, driven continuously by gear-wheels, is employed. Movable tables D and E, capable of being raised and lowered by suitable means, are provided in front and at the back. The material is passed between the rolls B and C, and the tables are then raised and the material returned between the rolls A and B, and so on. Pressure is put on the bearings of the top and bottom rolls by means of hydraulic cylinders, the top and bottom bearings being adjustable by screws and inclined planes *a*, *a*[1]. The Figure shows a calender with two hydraulic cylinders F below the rolls one at each side. Each cylinder has two rams G, H, between which water from an accumulator is admitted and which press respectively upwards on the roll C and

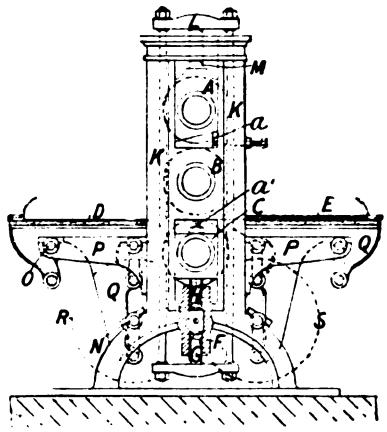

downwards on the roll A, by the aid, in the latter case, of side rods K and bars L and M. A single hydraulic cylinder may be made to effect the same purpose, or four may be employed, one for each bearing. To prevent the tables from tilting when being raised, two double-cranked levers N, O are provided, pivoted to the framework and to side arms P respectively, and also to the table brackets Q. Other means for effecting this are described. One end of each lever N is connected with one of two spur-wheels R, S, which gear with each other and thus cause the tables to move together.

1462. Rowland, T. Feb. 3.

Paper machines. — Relates to apparatus for varying the distance between the deckles and the width of the apron. This is effected by turning by a handle the pulleys *a* which are connected by a cord or side gearing and are carried on screwed cross-shafts *b*, *c*, passing through one of the deckles. The latter is thus shifted along cross-shafts *d*, *e* mounted in standards on the sides *f* of the machine. The inner end of the apron is attached to a drum *g* on the cross-shaft *h* supported in brackets *k* connected to the movable

Digitized by Google

deckle. As the latter is moved the drum *g* is set revolving by means of a pinion *l* and rack *m*, and

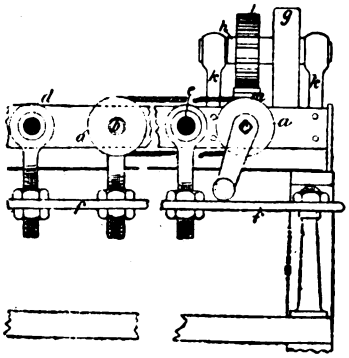

thus takes up or pays out the apron evenly across the apron board. Both deckles may be provided with this apparatus.

1753. Archibald, W., and **Purdie, J.** Feb. 9.

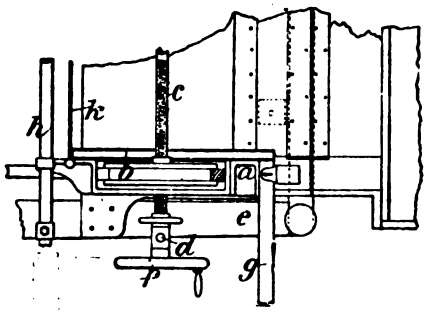

Paper machines. — Relates to mechanism for adjusting the deckle frames so as to alter the width of the web of paper without stopping the machine. Short deckle frames *a* are provided, each of which carries a strap pulley *b* turning on a hollow socket, the interior surfaces of the sockets being respectively formed with right and left handed screw-threads. Through these sockets pass the screwed shafts *c*, the inner ends of which may be united by a coupling. The shafts are supported in and by standards *d*, rigidly secured to the shake-bars *e*. By tightening the coupling and turning a hand-wheel *f* the frames may be simultaneously shifted in or out, or by loosening the coupling the adjustment may be made from each side independently. One end of each deckle frame is connected to the transverse portion *g* of the elbow, and the other end is supported on the bar *h* and is made with a dovetail groove wherein the slice *k*, which is made in two parts clipped together at their inner ends, may be adjusted. The remaining deckle pulleys are free to slide on their respective shafts so as to adjust themselves automatically when the frames *a* are shifted.

1767. Behr, A. Feb. 9.

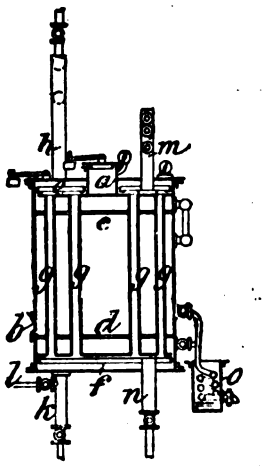

Raw materials, treating; waste products, treatment of. — Relates to the method of extracting cellulose &c. from vegetable materials described in Specification No. 9797, A.D. 1884. In place of one extraction cylinder, several are used, one of which is shown in the Figure. The vegetable material is introduced at a manhole *a* and discharged at *b*. *c* and *d* are perforated plates, the former of which can open partly for the passage of the material. The chambers *e* and *f* are connected by pipes *g*. Steam is admitted at *h*, after passing through a coil in an evaporating-apparatus containing the oil of turpentine or fusel oil, which is used as described in the above-mentioned Specification, and passes out at *k* and thence by a pipe *l* to the next cylinder, and so on to the boiler-house. Oil is pumped in at *m* from a tank and discharged at *n*. After a time, the oil vapour from the evaporator referred to is led in at *m*, the stop-cock of *n* being regulated so that more vapour enters than hot liquid escapes. This is carried on till the sample obtained by a cooler *o* is colourless, every particle of the substance to be extracted being thus pressed out. The solution of resin wax or fat flows out at *n* to a receptacle, from which it may be pumped to the evaporator or be conducted to the oil tank. Steam at high pressure is next admitted through *m* for driving out the remaining oil. An apparatus for separating the oil and water is described. The cylinder is next filled up with very dilute sulphuric acid and heated by steam, or the contents may, after being cooled by passing cold water through from *e* to *f*, be treated in the glucose boiler described in the above-mentioned Specification.

2722. Abel, C. D., [*Patent Papier Fabrik zu Penig*]. Feb. 28.

Pulp, treating.—Paper for cheques &c. is treated in the pulp with ferric salts and with ferrocyanides insoluble in water but soluble in acids on the one hand, or with ferric saccharate and ferrocyanides soluble in water on the other hand, the paper being afterwards treated with indigo or acid fuchsin to produce a slightly blue or red colouration. If the paper be tampered with by chemicals the colour will become destroyed or altered, and thus render visible any attempt to remove or alter the writing thereon.

Digitized by Google

2723. Abel, C. D., [*Patent Papier Fabrik zu Penig*]. Feb. 28.

Pulp, treating.—Paper for cheques &c. is treated in the pulp with indigo and with a chromate that is insoluble in water but soluble in acids, a blue-green to yellow-green colouration being produced. If the paper be tampered with by chemicals the colour will become destroyed or altered, and thus render visible any attempt to remove or alter the writing thereon.

2979. Louvot, E. P. March 6.

Papier mâché.—Compounds are made by filling with tar the pores of dry absorbent bodies such as cardboard, paper, rope, canvas, &c. On placing tar products in contact with the bodies and creating a vacuum the tar settles in the pores of the bodies. The material is then subjected to pressure, and the volatile and liquid portions of the tar are afterwards expelled by graduated heat. The product is stated to be impermeable, uninflammable, and acid-proof, and capable of many applications, such as to hollow-ware, roofing, partitions, barrels and pipes for acids, panels, and to the manufacture of paving-blocks, railroad sleepers, spinning bobbins, boats, buttons, jewellery, packing-materials, &c.

3038. Lake, H. H., [*Baker, J. M.*]. March 7.

Paper boards.—A sheet or roll of "chemical "wood fibre," produced by boiling wood chips with caustic soda *in vacuo* or otherwise, is embossed in any pattern while damp and after drying, and is coloured or bronzed and employed to cover walls, ceilings, &c. The material may have bosses produced on it as shown in section by the Figure. Additional strength and stiffness can be obtained by treatment with glue and glycerine or other suitable composition. The composition may be applied between two sheets of the material, which are then embossed while the adhesive substance is still damp.

3640. Hartley, W. March 21.

Calendering.—Relates to means for applying pressure to and driving the calender rolls and for operating the delivery and receiving tables. The Figure shows the method of weighting as applied to a calender of the kind described in Specification No. 1412, A.D. 1885. The bearings of the lower roll *a* are pressed up by means of a lever *b* pivoted at one end and connected at its other to a rod *c* passing up through the framework. This rod is pivoted to a lever *d* which presses by means of a screw *e* on the bearings of the upper roll *f*, and is connected by a rod *g* to a system of levers below supporting a weight *h*. The arrangement may be modified to suit a two-roll calender. In order to drive the rolls with a reciprocating motion, so that

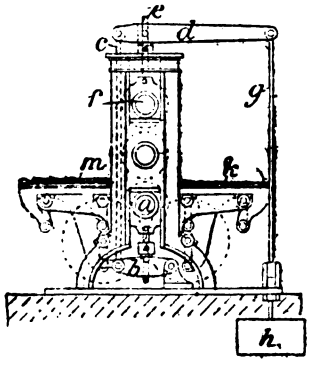

the sheets may be passed backwards and forwards between them, a driving-shaft imparts, by means of rods and levers, a to-and-fro motion to a rack gearing with one of the spur-wheels which couple the rolls together. Or the reciprocation may be obtained by means of a chain passing round a pulley on the lower roll axle and attached at its ends to an oscillating curved lever. The tables *k*, *m* for receiving and delivering the sheets are coupled together, and methods are described for moving them in opposite directions simultaneously.

3921. Barnes, G. P. March 27.

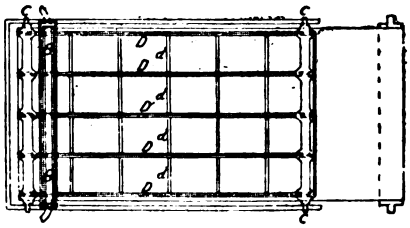

Paper machines; drying; sizing.—The paper is made in separate sheets of any desired size on the wire-cloth by means of endless straps of rubber &c. D running parallel to the ordinary deckles and connected by cross-pieces *d* of the same or other material. The pulp-box B is placed across the machine immediately after the first deckle cylinder C. The sheets are transferred to an endless felt with or without the aid of suction boxes, and are conveyed between it and a second endless felt to another set which takes them over drying-cylinders or through a drying-chamber. The sheets may also be passed by the same means through a bath containing size, and again dried.

Digitized by Google

3980. Simpson, D. C. March 28.

Pulp, treating.—Writing or other markings on paper, cardboard, or other material are rendered indelible in water by impregnating the material with chemicals during the process of manufacture. A solution of alkali or alkaline carbonate or bicarbonate or potassium ferrocyanide (either with or without a mordant such as alum or tin chloride) may be employed.

4151. Heys, W. E., [*Ladewig, E.*]. April 2.

Fireproof and waterproof paper.—A mixture of soft asbestos fibres, pulverized ammonium sulphate, solutions of zinc chloride ammonia and resin soap, crushed asbestos stone, and baryta white is worked up with water in a rag-engine to a pulp, which can be made into paper or pasteboard in the usual manner. Ordinary roofing pasteboard or felt may be coated on one or both sides with this material, or ordinary paper or pasteboard stuff may be felted with it on a paper or pasteboard machine.

4207. Beck, W. H., [*Wagener, H.*, and *Müller, A.*]. April 2. *Drawings to Specification.*

Materials, fibrous; raw materials, treating.—Fibrous matter, obtained by a special process and apparatus from sewage &c., is utilized for the manufacture of pasteboard for roofing, a simple washing only being required. For finer pasteboards the matter is passed through a disintegrating-mill. To free the mass from woollen fibres it is treated with caustic lye.

4230. Warhurst, A. B., and **Bedford, J.** April 7.

Perfumed paper for cigarette wrappers &c. The perfume consists of a mixture of all or a selection of the following materials:—Gums,—olibanum, benzoin, balsam tolu, myrrh; barks,—yellow sandal wood, cascarilla, cinnamon; herbs,—lavender flowers. The materials are reduced to a powder and then incorporated with the paper pulp.

4300. Bruce, W. P. April 7.

Paper machines.—The paper is divided longitudinally while it is being formed, by means of fine jets of water directed against the pulp on the endless wire.

4569. McDougall, A. April 14.

Boiling. — Relates to boilers used for the conversion of woody or other fibres into pulp for making paper or other articles. An elastic or yielding packing (consisting of caoutchouc, felt, cork, or other suitable material) is inserted between the iron or steel casing and the lead lining The casing is made in flanged sections bolted together over the elastic packing.

5461. Donkin, B., and **Lehmann, A.** May 4.

Paper machines.—Relates to apparatus for making paper boards. A thin sheet of pulp is led between two endless felts passing between press rolls and is carried by the top felt, so that layers of pulp become superposed until the required thickness is obtained.

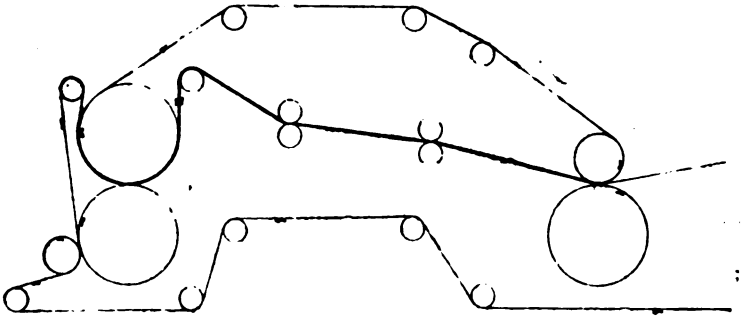

5585. Weygang, C. May 6.

Sizing; pulp, treating.—Oils, tars, resins, or like substances are dissolved in an alkaline solution, incorporated with the pulp, and precipitated by a neutral salt of an alkali, *e.g.* ammonium nitrate or sulphate, either alone or in combination with more energetic agents. In some cases the former may be omitted and potassium bichromate or permanganate used in combination with a metallic salt. Tannic acid, with or without acetic, pyroligneous, or other acid, may be used with a salt containing nitrogen, or a saccharate of an alkaline earth by itself. In some cases also aromatic substances or ground cork may be employed in combination with the sizing-substances.

Digitized by Google

5626. Makin, J. May 7.

Boiling.—Relates to lead-lined boilers or digesters. A sheet *a* of iron or other metal, of a harder and less expansible quality than lead, is perforated with a number of holes *b*, and a coating *c* of lead is cast thereon on one or both sides. In the former case the holes *a* are tapered on the reverse side as shown, the lead forming tapered rivets holding the coating in place, while in the latter case the coatings are held together by the lead filling the perforations. These compound plates are placed inside the vessel to be lined, and lead is run in between the joints thereof by means of a blowpipe.

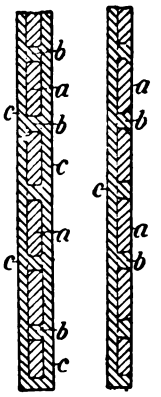

6603. Napier, W. May 30.

Compound paper.—To produce embossed material, coloured or printed paper, foil, &c. is placed upon a damped sheet of straw or wood pulp board, the surface of which is coated with any adhesive material; the whole is then placed between specially-constructed dies, heated by any suitable means, and pressed in an ordinary press.

6676. Boult, W. S. June 2.

Waste products, treatment of.—Relates to washing and settling apparatus for treating waste liquors from paper mills. The material to be washed or separated is passed with water through a settling-trough A into a final settling-tank B. The trough is divided by partitions C extending partly across alternately from opposite sides, which form a zig-zag channel gradually increasing in width towards the tank B. The bottom of the trough A is also inclined, so as to further increase the sectional area of the channel near the tank. The velocity of the current of material thus becomes gradually slower as it passes through the trough,

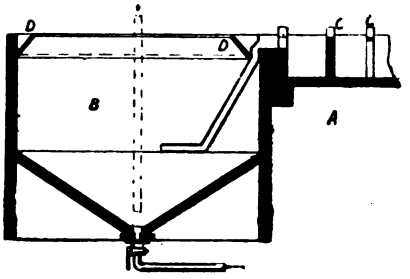

and successively finer particles are deposited. The residual mixture is led below the surface of the liquid in the tank B, where the final deposition takes place, the liquid flowing off into the channel D. The deposits are removed after running off all liquid by any suitable means; the sides of the trough A may be inclined for this purpose.

6839. Menzies, R. C., Cross, C. F., and Bevan, E. J. June 5.

Pulp, treating.—Pulp obtained by any ordinary process is washed and saturated with an alkaline solution. The excess of liquor is drained off and the pulp exposed to the action of chlorine gas until no more is taken up. It is again washed, and is then bleached by any ordinary method.

6840. Menzies, R. C., Cross, C. F., and Bevan, E. J. June 5.

Raw materials, treating. — The raw fibrous materials are saturated with solutions containing both caustic alkali and an alkaline sulphite. The excess of liquor is then drained off and the mass subjected to the action of steam, washed, and further treated with bleaching-chemicals &c.

7156. Lake, H. H., [*Jordan, J.*]. June 11.

Pulping-engines.—"Jordan" pulping-engines are made with the knives in groups at the smaller end, open spaces or recesses being left between them. One or more pipes O are employed to admit water at different points, and, if necessary, steam is admitted through the pipe P. The interior of the shell A is made free from knives for a short distance from the pulp inlet C, and in their place is substituted a smooth concave plate.

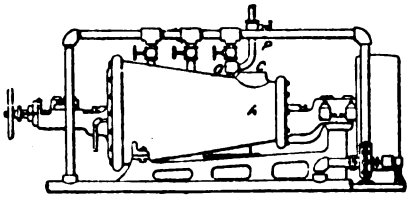

Digitized by Google

7458. Lake, H. H., [*Beaunier, A. D.*]. June 18.

Paper boards.—Relates to the manufacture of cardboard or pasteboard, formed of three or more layers, in continuous lengths or pieces. The core A, formed of one or more layers of inferior paper, is delivered from the drum B and the two facing-sheets C are delivered from drums D, and passed over rolls E dipping into vessels F containing paste &c., and the whole is passed through pressing-rollers G (the lower one of which dips into a vessel K of water), then over drying cylinders H, and, if necessary, over glazing-rolls, being finally delivered on to the drum I. Suitable cutting and printing mechanism may be combined with the above apparatus for the production of tickets or the like.

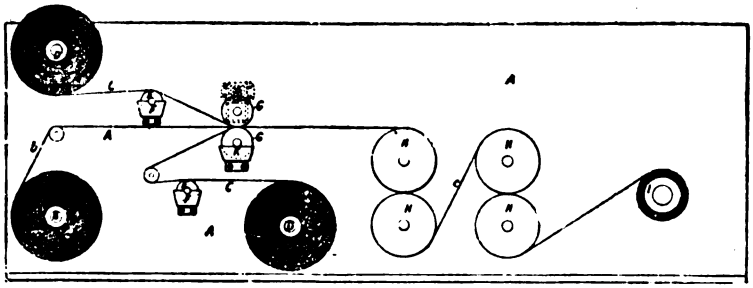

7495. Haddan, H. J., [*Voigt, C. H.*]. June 19.

Waste products, treatment and utilization of; raw materials, treating.—The waste products obtained in the manufacture of paper from straw or similar vegetable fibrous material are treated in the following manner and utilized as food for live-stock. The straw is digested with a solution of soda which dissolves out all the constituents of the straw except the cellulose which forms the paper pulp; this soda solution is then neutralized with sulphuric acid, and the dissolved organic matter which has nutritious properties is precipitated in the neutral solution. The precipitate is washed, dried, pressed into cakes, and utilized for the purpose mentioned.

7772. Petrie, J., and **Petrie, F. W.** June 26.

Cleaning fibres.—Esparto grass or other material, fed by the lattice A to the feed rollers B, is acted upon by the revolving beater C, the lighter particles of dust &c. being carried off by a fan D and the remainder passing through the grids E, F into the settling-chamber G. The upper of the feed rollers B is capable of sliding vertically in slotted guides H in order to accommodate the material in varying bulk. Some of the arms of the beater are fitted with metal blades I, the remaining arms being provided with cross-bars J which carry studs or teeth K; similar teeth are also fitted upon a dead-plate L.

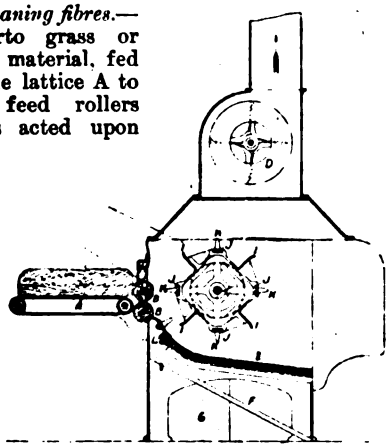

7932. Roeckner, C. H., and **Roeckner, F. L.** June 30.

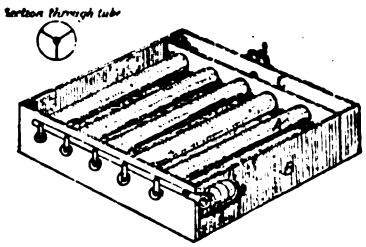

Strainers.—One or more strainer boxes A, of cylindrical or other shape and with one or both ends open, are arranged in the vat. A fan is caused to oscillate inside each box, and the strained pulp is discharged at the open end into the channel C. The boxes may be made to oscillate instead of, or as well as, being provided with the fans. The pulp is introduced into the vat intermittently to agitate the contents.

8073. Springer, C. C. July 3.

Boiling.—The spaces between the sections of the boiler lining, which is of lead and perforated iron, made preferably by coating the iron with lead, as described in Specification No. 14,071, A.D. 1884,

Digitized by Google

are filled with asbestos &c., and covered with a strip made in the same way as the lining itself. Strips of asbestos &c. may also be placed between the

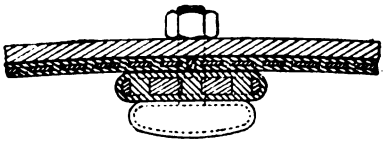

cover-strip and the lining, and between the lining and the casing of the boiler, as shown by the thick lines. Bolts with lead-covered heads are then passed through and secured by nuts on the outside.

8130. Shillito, T. R., [*Arnold, C.*]. July 4.

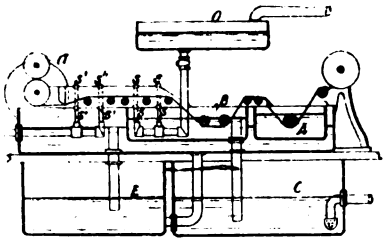

Parchment paper.—Relates to a method of manufacturing paper parchment whereby a saving in the acid employed is effected. The paper is drawn through a trough A containing the acid solution and is passed onwards, over and under friction rollers, through the washing-trough B and under jets s, s^1, and is then wound on a roller a. The jets s^1 supply fresh water and operate mainly at the commencement of the process, the water passing through a pipe (not shown) from the tank E to the tank C, from which it is pumped to a cistern O which feeds the remaining jets s. The acidulated water is continuously removed from the trough B and conducted to the jets s. When the water has taken up a considerable quantity of acid, the jets s^1 are turned on to effect a complete removal of the acid from the paper, the solution thus produced passing to the tank E and so to the cistern O, from which it may be drawn off for concentration to be re-used in the trough A. The trough B is kept surrounded by cold water as shown.

8162. Hucks, W. July 6.

Strainers.—The liquid to be treated is run into a trough-shaped vessel A, the bottom of which is covered with an endless band B travelling over and under rollers C, C, C, C. The liquid filters through this band and passes away by a channel D at the bottom of the vessel A. The solid matter which is precipitated in this way is carried forward by the travelling band until it reaches the point E where it is thrown off. The band before it reaches the liquid again at F may be subjected to the

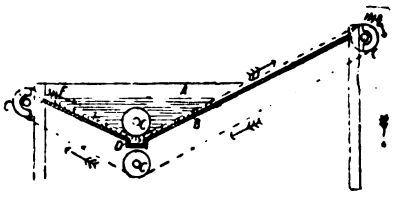

cleansing action of scrapers, jets of water, revolving brushes, &c. The solid matter precipitated upon the band may be compressed before reaching the point E by means of rollers. In modifications, the band enters through the bottom of the trough, which may be variously packed.

8616. Black, F. X. July 16.

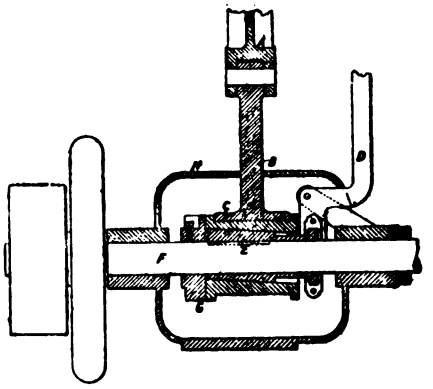

Strainers.—A slotted or perforated screening-vat, which receives the pulp to be strained, is supported on vertical yokes A at each side of the apparatus in a fixed vat, provided with an outlet leading to the paper-making machine. The eccentric rods B of the eccentrics C are connected with the yokes A, which thus impart a vertical vibration to the screening-vat. The strokes of the eccentrics may be simultaneously varied, to suit the character of the pulp, by means of levers D which shift the oblique cylindrical cores E along the driving-shaft F, and cause the eccentrics to slide transversely to the shaft in guides formed in collars G. Cylindrical vessels H, cast with the boxes of the shaft, surround the eccentrics and contain oil for lubrication.

8685. Cornett, J. P. July 18.

Paper machines.—The edges of the sheet of paper are trimmed by means of jets of water or other fluid, which are caused to impinge on the

Digitized by Google

pulp web as it passes from the deckles to the couch-roll, and which can be regulated to cut off strips of any width from the edges of the sheet.

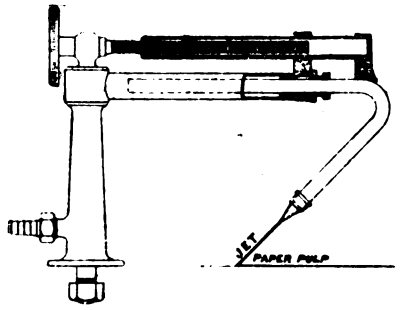

8808. Nation, W. B. July 21.

Raw materials, treating; waste products, utilization of.—For the production of half-stuff, vegetable fibre is heated in a solution of an alkaline salt or salts, with or without an alkaline earth, contained in tanks which may be provided with porous partitions. Electric currents are passed through the mass to decompose the salts, and the resulting gases are utilized in bleaching and other operations.

9319. Morrow, H. W. Aug. 4.

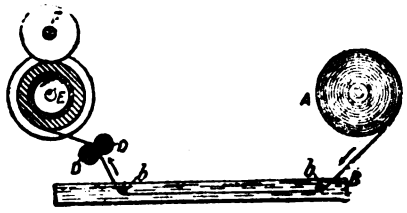

Paper boards; papier mâché.—Relates to the treatment of paper, woven fabrics, or similar fibrous material, for the production of sheets or slabs of a material to be called "celluvert," which is tough and strong, susceptible of polish, non-inflammable, and capable of resisting most acids and alkalies; also to the treatment of the material so produced to make it permanently soft and flexible. The application of the material to the manufacture of a number of articles is mentioned in the Specification. It may be sawn, cut, or punched into the required shape while dry, or heated and pressed in moulds or dies. Sheets of the paper &c. are immersed in a bath of nitric acid or a suitable nitrate, with or without other solvents of cellulose, until the surfaces become pasty, and two or more sheets are then united by heat and pressure to form sheets or slabs. Any suitable apparatus may be employed, such *e.g.* as that shown, in which material is unwound continuously from the roll A, passed below the rollers *b* through the solution in the trough B, and between the squeezing-rollers D to the drum E; E is provided with flanges and is preferably heated, and the roller F resting upon it gives by its weight solidity to the mass formed by the cementing together of the sheets. When a roll of the desired thickness has been formed, it may be removed by splitting it longitudinally, and the resulting sheet or slab is then soaked in alkaline or clear water, slowly dried and pressed, and may be coated with gum, oil, albumen, glycerine, or saccharine matter, or any mixture thereof. Sheets of woven material may be interposed between sheets of the soaked material before cementing, and starch, gum, mucilage, dextrin, albumen, or any form of cellulose may be added to the material, either during manufacture or before soaking or by dissolving in the bath. Any mineral or earthy substance, starch, &c., or any form of cellulose, may also be sifted between the layers during winding. The sheets or slabs may be made pliable by immersion in a bath of glycerine or saccharine matter, or both, or preferably in a bath containing a deliquescent salt or salts, which may be added to the bath containing glycerine or saccharine matter.

9433. Haddan, H. J., [*Korschilgen, J. P.*]. Aug. 7.

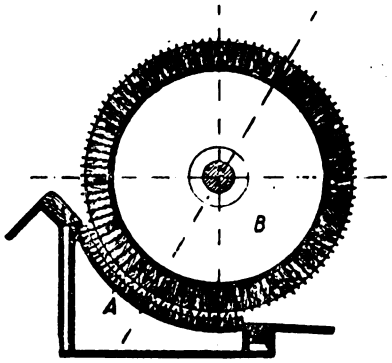

Rag-engines.—The ground-work or engine bed A is formed of suitable stone or metal plates having ribs or knives, formed by chiselling, casting, or planing, which surround the roll B radially on one-tenth to one-third of its circumference. The bed may be partly or entirely sunk into the bottom of the engine trough. The roll B is made of stone or metal or of metal with a stone casing, and is furnished with ribs or knives formed close together as is the case with the ground-work. Fan or paddle-wheels are arranged to turn on horizontal axes for the purpose of increasing the circulation of the pulp, adjustable angular bars being arranged across the trough close to the cylinder. Mechanism is provided for lifting or lowering the cylinder parallel with its axis and radially to the ground-work.

Digitized by Google

9602. Groth, L. A., [*Kurtz, F.*]. Aug. 12.

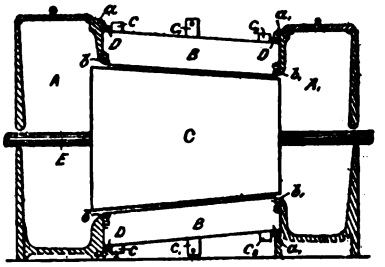

Pulping-engines.—Relates to pulping or rag engines. The engine consists of a frame A, A_1 provided with bearings a, a_1 and rings b, b_1 in which rest alternately bars B of suitable metal and pieces of wood so as to form a conical surface which surrounds a revolving cone C provided with knives. The bars of wood and metal are fastened by wedges D and ribs c, c_1, c_2, the metal bars projecting inwards beyond the wooden ones. The axle E of the cone C passes through holes in the parts A, A_1, stuffing-boxes being dispensed with. The raw material is admitted until it reaches nearly to the axle E. The slant of the knives may be altered to vary the rate of grinding.

10,092. Kenyon, J. Aug. 26.

Felts.—Drying-felts are perforated to allow the escape of steam.

10,543. Richardson, C. J. Sept. 5.

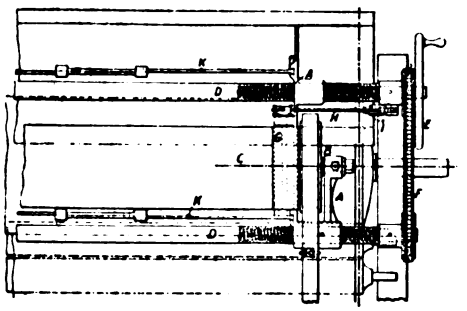

Paper machines.—The deckle-frames A supporting the wheels B and the ends of the apron C are adjusted by the horizontal bars D, screwed in opposite directions at the ends and rotated by the hand-wheel E and chain F. The apron C passes over rollers G mounted on the deckle-frames, and is kept strained by the cord H and weight I. The slices K which control the flow of pulp are in two parts capable of sliding over each other.

11,561. Kassner, G. Sept. 29.

Materials, fibrous; raw materials, treating.—Plants bearing milky juices are treated for extracting valuable products, such as caoutchouc, fats, wax, and colouring-matter, and are subsequently further treated for obtaining the fibres for paper-making &c. The dried plants are reduced by machinery, rollers, or hammers, and the fibre removed from the powdered matter by sifting. The powder is specially treated for extraction of the caoutchouc, fats, &c. The fibrous material and seedwool (if any) extracted during the pulverizing and sifting operations may be further cleansed from bark and wood parts, and used for paper-making.

11,581. Smith, R. Sept. 29.

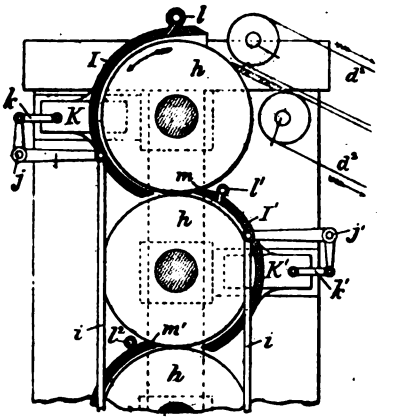

Calendering.—Relates to mechanism for guiding the paper web from the driers to and through the calenders. From the driers the web passes over an inclined swing-table and between two swiftly-running draught rolls carried thereon. It passes thence between endless travelling tapes d^2 to the calenders h. When the web breaks the table is lowered to a horizontal position by the operator and the paper passed between the draught-rolls, whereby its tension is restored. The table is immediately swung up, the paper, by this action, being severed between a fixed cutter and a cutter carried by the table. The paper is then fed directly to the tapes d^2 and calenders h, and is guided through the latter by perforated wind cases I, I^1, connected by pipes l, l^1, l^2 with a blower or exhaust. These cases may, when not required, be shifted from the rolls in guides K, K^1, by levers and rods k, j, i, &c., actuated by the operator from a lever (not shown). The upper ends of the wind cases terminate in spring bars or fingers m, m^1, which bear against the rolls and guide the paper from one to the other. A blast of cold air may be applied across the web for the purpose of cooling it prior to its entrance between the calenders.

Digitized by Google

12,041. Sheldon, A. Oct. 9.

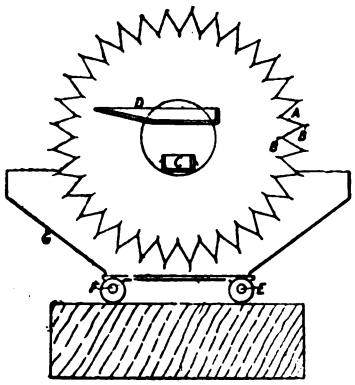

Strainers.—A drum rotating on trunnions has its cylindrical surface formed of transversely-slotted plates A, arranged in a zig-zag manner as shown and fastened together by screws passing through the flanges B. The paper pulp enters by the trough C through one of the trunnions, and the knots are carried up by the drum and fall into the tray D. The drum is driven by a toothed wheel, secured to one of the end discs and engaging with a pinion on the driving-shaft E. Another pinion on the shaft F engages with the toothed wheel, and these pinions give a vertically-reciprocating motion to the tank G by means of eccentrics upon their shafts.

13,022. Morton, F. G., and **Salamon, M.** Oct. 29.

Raw materials, treating, for the production of half-stuff. Waste vegetable materials are first torn to pieces, teased, and washed. The mass is then boiled in a weak alkaline solution and washed. It is then treated in a bath of very dilute sulphuric acid and again washed, after which it is bleached in the ordinary manner. The bleaching is arrested either by washing or by the addition of an alkaline hyposulphite or anti-chlor that will not discolour the materials. It may then be subjected to a second bleaching in a bath of water containing a suitable bleaching or oxidizing agent such as an alkaline hypochlorite. It is pressed, opened, and dried, and finally pressed into bales ready for immediate use.

13,933. Bentley, G., and **Jackson, J. B.** Nov. 14.

Boiling.—Relates to epicyclic gear for driving rag boilers. The driving-pulley G is fixed on the boss of an eccentric F which runs loose on the shaft A. A pinion E rotates freely on the eccentric and gears with two internally-toothed wheels C, D, of which C is fixed and D, which has a slightly-larger number of teeth, is keyed to the shaft A. By these means a very slow motion may be transmitted to the shaft, and may be further reduced by ordinary spur gearing.

FIG. 2.

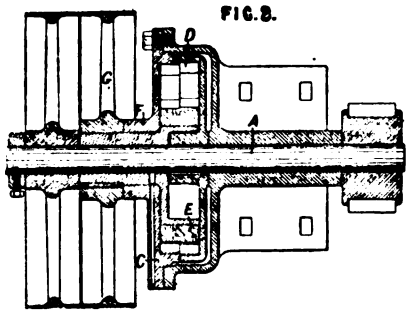

14,290. Robertson, J. Nov. 21.

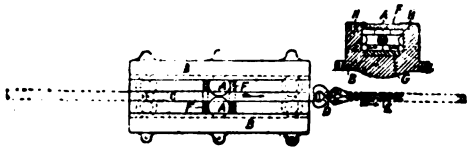

Calendering.—The invention is described with reference to a metal-rolling mill, but it is applicable also to apparatus for calendering paper in the web &c. The object is to reduce the friction in the mills. The rolls A are contained in a rectangular housing B, in which they travel while the metal rod or tube &c. C is drawn through the rolls by the tongs D and chain E of an ordinary draw-bench. The channel in the housing is bevelled at the entering end to allow the rolls to open for the insertion of the rod &c., and is of a width equal to the sum of the diameters of the two rolls, which are mounted in a recess in a casting or guide F, travelling in a groove G, to maintain the rolls in a transverse position in the housing. The housing is provided with top flanges H cast on or fixed by screws to the housing, or a separate cover-plate may be attached to the housing by screws. The housing may be constructed in two parts bolted together, or may be cylindrical and may for adjustment be fitted with an internal movable side piece, which would be kept up against the rolls by hydraulic pistons, screws, or wedges, or the two parts of the housing may be made self-adjusting by radial bars like a parallel ruler. Two or more pairs of rolls, with the axles of the pairs at right-angles, may be placed in recesses in the guide, or one or more sets of three or more rolls may be used, acting on the article being rolled &c. simultaneously. Instead of the work being drawn through the rolls, the rolls or guide may be drawn or pushed through the housing, the housing may be traversed, or the rolls may be rotated by hand or power. The work may be operated on between the rolls or between one or both rolls and the housing. The rolls may be spherical or of any other suitable form, and may be provided with grooves or any

Digitized by Google

suitable pattern, or the pattern may be placed or shaped in the housing. The rolls may be mounted in bearings, and the housing will then, to relieve the pressure, traverse on the rolls or necks of the rolls, which would be rotated by any suitable means. The guide may travel on slides projecting from the upper part of the housing, and the lower part of the housing may be supported by a hydraulic piston or be mounted on a screwed stem for adjustment. The housings may be curvilinear, or the rolls may be supported by the periphery of or between flanges on wheels or pulleys which are mounted eccentrically for adjustment and which relieve the pressure from the bearings of the rolls.

14,348. Stanley, J. C. W. Nov. 23.

Raw materials, treating.—The invention is applicable more especially to refuse containing leaf, seed, &c. The impurities are removed by passing the mass through a gin, and then through a breaking-machine, after which it is dusted and boiled in water or weak alkali. Chalk, fine sand, or other abrading-substances are then added, and the mass crushed or ground between stones or rollers and washed in a strainer. For use in paper-making the fibrous mass is reduced to a pulp in suitable machines. For convenience of transport the moisture may be partially removed by pressure, or the pulp may be made into paper.

14,846. Armstrong, J. Dec. 3.

Wire-strengthened paper.—Wires of any suitable material are inserted in the paper during manufacture. They may be placed singly or in groups, or in the form of chains, rings, or ropes. They are placed in loose, or in frames, or bound together, and the material is applied in a soft state and allowed to set.

14,939. Greenhalgh, J., and **Haydock, J.** Dec. 5.

Alarm apparatus for stuff taps. The pulp flows from the stuff tap into a scoop or plate C, pivoted at 2 to a fixed stand and at 5 to the end of a link 6 connecting it to the end of the lever 8. This lever is pivoted at 9, and is provided with a balance weight 13. When the flow of pulp diminishes, the lever opens a valve to admit steam from the passage 17 to a whistle 15, or operates any other suitable alarm.

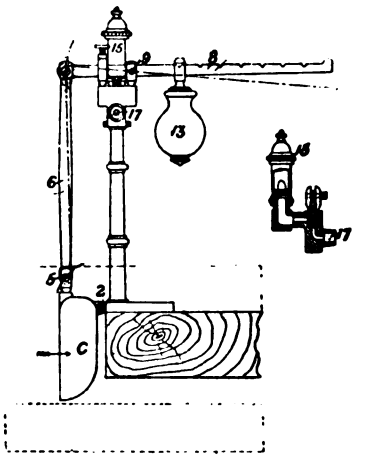

15,702. Marshall, T. A. Dec. 21.

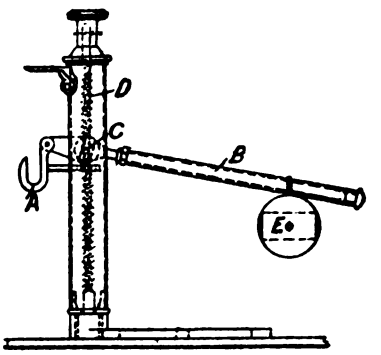

Dandy-rolls, supporting. The dandy-roll is suspended in a bearing A, at one end of each of two weighted levers B, which swivel upon the nuts C. These nuts can be adjusted vertically by means of the screws D, and the pressure of the dandy-roll can be regulated by shifting the weights E. The roll may also be suspended by two chains &c., passing over pulleys and carrying weights at their other ends.

Digitized by Google

A.D. 1886.

503. Lake, W. R., [*Edwards, W. F.*]. Jan. 12.

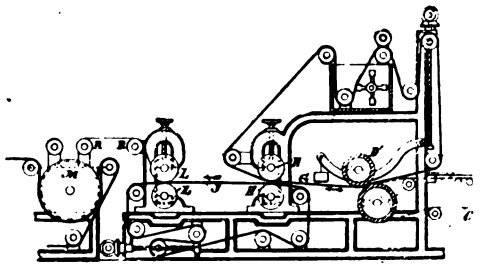

Paper machines. — An endless felt G passing under the upper couch roll D^1 and above the wire cloth C takes the pulp web on its underside, preferably to a second endless felt J, both felts passing between the first pair of press rolls H. After passing between the press rolls L the paper passes around the guide-rollers R to the drying-cylinder M.

795. Crookes, C. Jan. 19.

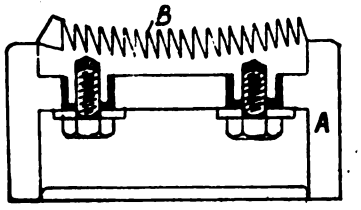

Rag-engines.—The bottom plates consist of a base-block A, to which is secured by bolts or other means a serrated or grooved face-plate B, cast or otherwise made in a complete or nearly complete state of steel, chilled cast iron, phosphor bronze, or other suitable metal. The face-plate may be made in parts and the cutting-edges variously arranged.

1795. McDougall, J. T., and **McDougall, J.** Feb. 6.

Pulp, treating.—Relates to means for extracting moisture from pulp prepared from wood or other fibrous material, in order to reduce it to a form or condition more convenient for handling, transport, storage, or subsequent treatment. The pulp is introduced into bags and placed in a hydraulic or other press, or it is first treated in a filter-press or hydro-extractor and then submitted to heavy pressure without being placed in bags.

2051. Ainsworth, R. H., and **Manby, E. B.** Feb. 12.

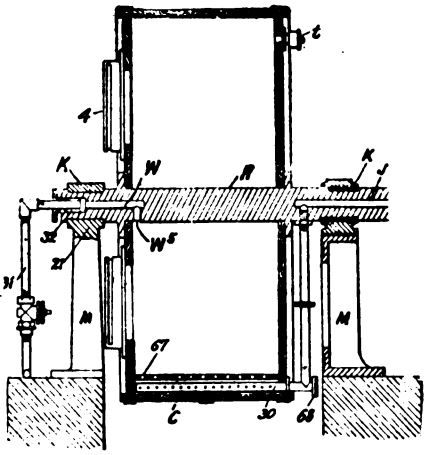

Bleaching wood pulp. Relates to apparatus for bleaching wood pulp, among other substances and articles mentioned, by the Thompson or other analogous processes. It consists of improvements in the "dash-wheel" employed in hand crofting. The Figure shows a vertical section of part of one form of the apparatus. The dash-wheel C is divided into four compartments, each of which is provided with an aperture with a cover plate 4 pivoted to a metallic ring and making an airtight joint by means of an india-rubber ring. The shaft H of the dash-wheel is journalled at 21 on the pedestals K mounted on standards M, and is hollow at the ends W and J. The cavity J is connected by a stuffing-box with a fixed pipe leading from the reservoirs of liquids and gases to be used; its inner end is continuous with a pipe fixed to the side of the dash-wheel and leading by the pipe 30 into the wheel near its periphery; the pipe 30 is perforated and is protected by a perforated plate 67; a blank flange 68 is provided for cleaning the pipe. The cavity W communicates with the wheel by the opening W^2, and with a fixed pipe 31 by a stuffing-box 32. The inside of

Digitized by Google

the dash-wheel is protected by a coating of sheet copper or other suitable material. The shaft H carries a bevel-wheel by which it gears with the driving-shaft. A back-pressure valve *t* is provided for regulating the pressure. In operation the material to be bleached is placed in the compartments of the wheel, the covers 4 are secured, the wheel is rotated, and the bleaching-liquid is admitted by the space J and pipe 30; when the material is saturated thoroughly by the motion of the wheel, the latter is stopped with the pipe 30 at its lowest position, and the excess of liquid is pumped or blown out. The wheel is then restarted, and the gas admitted and brought into intimate contact with the saturated materials by the motion of the wheel. When this operation is completed the gas is pumped out and the materials removed or subjected to washing or other operations. The wheels may be made with brackets internally, and the liquid may be admitted through the central shaft, which is then perforated.

2221. Rowland, T. Feb. 16.

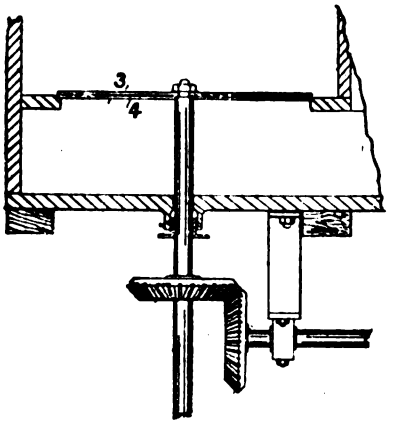

Pulping-engines.—The pulp from the rag-engine passes through a pair of slotted shearing-discs 3, 4, one or both of which are rotated by suitable mechanism. By these means a more thorough breaking up of the fibre is effected.

2278. Lake, H. H., [*Ball, C. E.*]. Feb. 16.

Boiling.—In boilers or digesters for paper pulp the lead lining B is separated from the iron casing A by rings D on the former or E on the latter, and may be held in position by bolts F. The steam pipe communicates both with the interior of the boiler and the space C, so that an equal pressure is maintained on both sides of the lining B. A wire I is connected with an electric battery K and a signalling-apparatus L, and its ends are passed through, and insulated from, the casing A, and are brought close together without contact, so that any leakage of acid through the lead lining establishes the circuit.

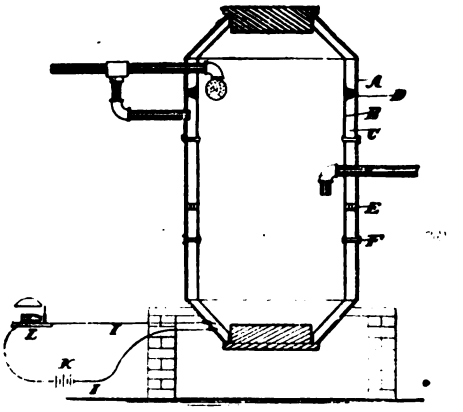

2915. Stanley, J. C. W. March 1.

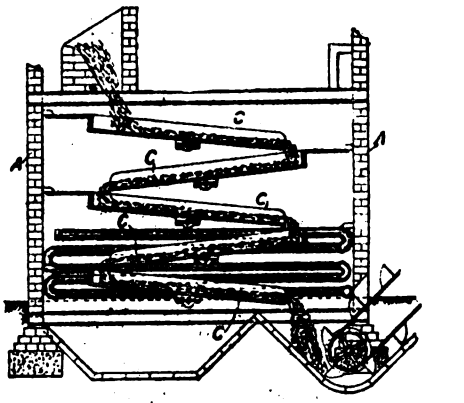

Raw materials, treating; materials, fibrous.—The fibrous material in the contents of dust bins, shop sweepings, &c. is separated from the dust and utilized for the manufacture of paper &c. The refuse is first passed over a series of covered rocking sieves C in a drying-chamber A as shown. It is then passed through a breaking-up machine, consisting of a cylinder carrying rows of teeth and rotating in a casing provided with a row of similar teeth engaging with them. After this it is treated in a series of crushing-rolls and sieves arranged alternately and operated by suitable mechanism. Finally, the material is passed through a series of ordinary carding-machines.

3111. Watson, H. March 5.

Strainers.—When the slits of strainer plates become worn the upper surface of the plate is coated with a thick electro-deposit of hard bronze, copper, nickel, or other

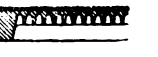

Digitized by Google

suitable metal. In order to make the deposit more uniform the grooves and slits are temporarily filled with a soft metal, such as lead, tin, zinc, &c. The parts not requiring to be renewed can be covered with a protective varnish. After the removal of the soft metal the slits are re-formed.

3472. Tompkins, J. D. March 11.

Raw materials, treating; boiling.—The wood, straw, or other material, previously cut or reduced to a uniform length, is introduced into a digester A, and is treated successively with boiling water, alkaline solution under pressure, and bleaching-liquor, by passing currents alternately in opposite directions through it. The dissolved substances are removed after each of the first two operations by first producing a current upwards, and then reversing it to discharge the substances through the pipe G. After each operation also the mass is washed by passing currents of hot water through the digester in the same way as before. The digester has perforated partitions B, B at its ends, dividing it from the liquid chambers C, C¹, and suitable pipes, cocks, and pumps are provided for the admission and circulation of the different liquids and of steam.

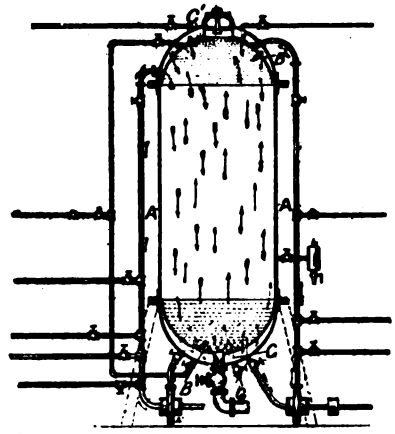

4218. Minns, H. R. March 25.

Paper boards, ornamenting. The boards, which are made from various fibrous materials in the usual manner, are ornamented in the soft state by placing between each pair of a series of such boards a web of ornamental wirework, or a suitably-engraved or embossed plate of metal, hard wood, or a hard-woven textile fabric. The whole pile is then subjected to pressure in a hydraulic or other press.

4237. Hibbert, G. March 26.

Pulping-engines.—Relates to apparatus for pulping, shredding, &c. substances used for paper pulp. A disc B or a roll, provided with bars or rubbers C, rotates in contact with a fixed plate similarly provided. A roll E is situated between the disc B or roll and the body of the tank A, and is provided at its ends with centrifugal blades or lifters H to assist the circulation. All the bearings have water spaces to keep them cool.

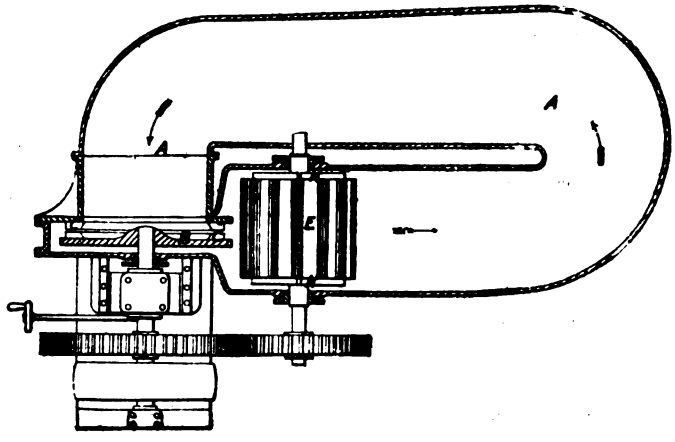

Digitized by Google

4427. Black, J. M. March 30. *Drawings to Specification.*

Paper machines.—An apparatus for printing and numbering railway tickets and the like is combined with cardboard-making apparatus. Several strips of paper are fed from separate rolls to gumming or pasting and pressing rollers and drying-apparatus.

4871. Redfern, G. F., [*Simonet, M. H.*]. April 7.

Pulping-engines.—Relates to a machine for grinding straw in paper mills, and other materials. Working in a casing B, with a removable top provided with a feed hopper C, are a pair of rolls, one of which is shown at A. Each roll is fitted with three sets of helical steel blades *a*, *a*, *c*, *c*, *d*, *d*. Of these, *a*, *a*, about six in number, run from end to end of the roll; *c*, *c* alternate with *a*, *a* and run for about two-thirds; while *d*, *d* placed between *a*, *c*, *a*, *c* run about one-third of the length of the roll from the delivery end respectively. The casing is provided with helically-grooved liners *f*, fitting close to the rolls and secured by adjusting-screws *h*, *h*. The shaft of one of the rolls carries a driving-pulley. The other roll is driven by the interlocking of the blades. The material fed in at the hopper C is carried forward to the delivery end by the action of the helical blades on the rolls and the grooves in the liners, becoming crushed or broken up in so doing, and is discharged by the pipe *e*.

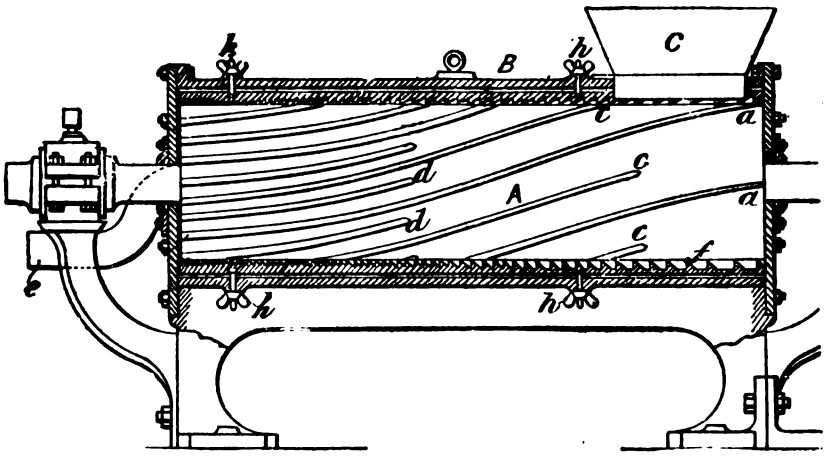

4934. Scammell, J. B. April 8.

Cigarette paper is made of asbestos.

5002. Hartley, W. April 10.

Calendering paper, cardboard, millboard, and other materials. The rolls are moved transversely in opposite directions by various means, one of which is shown. The shafts are provided with grooved blocks *u* at one end, and a double stud *y* on a fixed arm *z* engages with the grooves and produces the required motion. The journals are preferably suspended by a system of rods as described in Specification No. 3640, A.D. 1885, and in this case a spring buffer D is inserted between the rods and weights.

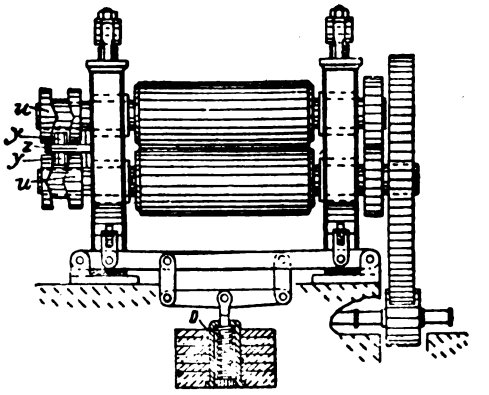

Digitized by Google

5129. Smith, R. April 13.

Paper machines, guiding wire cloths or felts for. Any lateral deviation of the cloth or felt from its normal path is caused to shift one end of the supporting-roller forward or backward as required to compensate for the said deviation, and to bring the cloth &c. back to its normal position. The spindle *a* of the supporting-roller is carried at one end in a bearing *b*, movable in the line of travel of the band over guides C projecting from a standard *d*. The outer end of the spindle carries a crank which oscillates the swing block *f* turning freely upon the lower spindle *g*, and upon which are centered two pawls *h* adapted to engage with a ratchet-wheel *j* fixed upon the said spindle *g*. This latter is supported in the main bearing *b*, and carries at its inner end a pinion gearing with a rack on the guide, so that its rotation causes the bearing, spindle, &c. to move bodily to or from the supporting-pillar. In the normal condition the pawls are supported by the shield K clear of the ratchet-wheel, so that the lower spindle *g* remains stationary. When, however, the wire cloth &c. moves sideways, it comes into contact with one of a pair of wings *l* on a bar passing under the cloth, which is thus moved endwise and causes, through a system of links and levers, the depression of the corresponding pawl, and hence the required movement of the roller. Stops are provided to limit this movement.

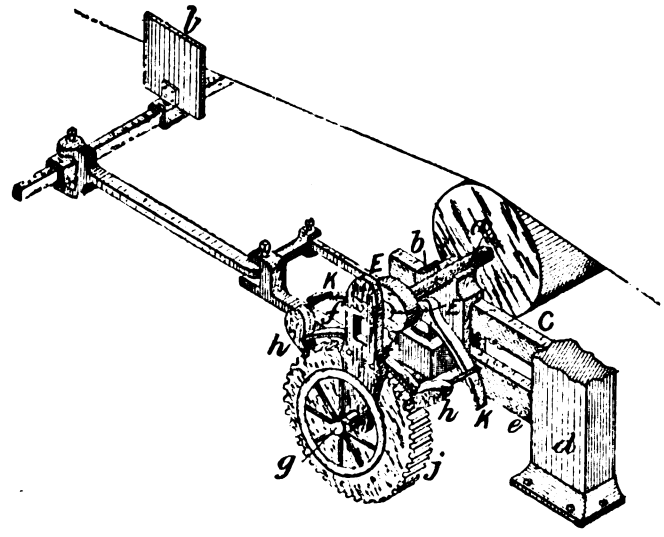

5563. Keys, W. E., [*Ladewig, E. G. H.*]. April 22.

Waterproof and fireproof paper, millboard, &c.; materials, fibrous; raw materials, treating; pulp, treating.—Relates to the manufacture of waterproof and fireproof paper, millboard, and analogous materials. 100 parts of asbestos are impregnated with from 4 to 6 parts of glycerine (or sodium chloride) diluted with from 5 to 10 parts of water in which from 4 to 6 parts of isinglass or other analogous substance has been dissolved. The impregnated asbestos is then pulped in a rag-engine or by other suitable means, the pulp being reduced to the desired consistency by the addition of water. From two to three parts of dry resin soap dissolved in hot water are then added to the pulp, afterwards a solution of about 6 parts of zinc chloride in from 15 to 25 parts of water is added, and finally a mixture of about 10 parts of graphite in 50 parts of water. The prepared pulp is formed into sheets, which are dried, immersed in a 1 per cent. solution of zinc chloride, again air-dried, and then passed through a solution of resin soap, and again air-dried. They may be glazed by calendering. Wire gauze and layers of cork, straw, or other non-conductors of heat may be combined with the sheets during or subsequent to the process of manufacture.

6228. Meinert, B. May 8.

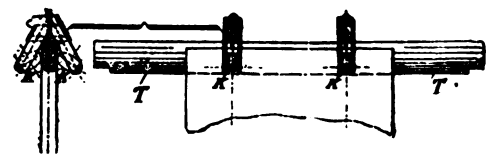

Drying.—Relates to clips for hanging up damp papers and pasteboards. The clips are springless and self-closing, being formed with small gripping-cams K as shown, and they may be used with or without a longitudinal rail T. The parts carrying the gripping-cams may be of sheet metal, and the cams may be modified to suit different thicknesses. They may also be arranged in rows, each row being carried by a horizontal rail.

6585. Dunbar, J. G., and **Mackenzie, A.** May 17.

Mixing pulp.—Relates to automatic arrangements for regulating the supply of water to the mixing-chest. The pulp flows from the stuff-chests into the supply box, which is divided into two compartments 4, 5, provided with overflow

Digitized by Google

openings 23, 24. In the second compartment is a float 6, carrying a spindle 7 to operate the water-

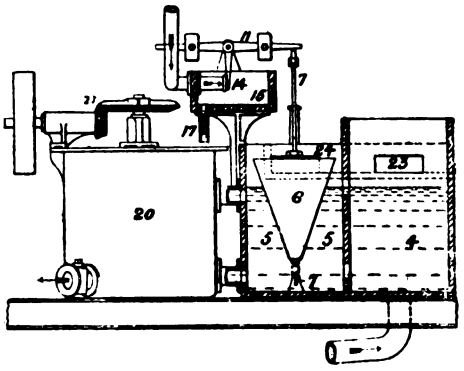

supply valve 14 on one arm of the bell-crank lever 11. Water is therefore admitted to the mixing-chest 20 through the box 15 and pipe 17 according to the density of the pulp in the supply box 5.

6654. Tijou, W. May 18. *Drawings to Specification.*

Boiling.—In pulp boilers a number of transverse tubes are provided, communicating at each end with the steam jacket and covered with lead in the same manner as the interior of the inner casing of the boiler.

7336. Mallary, G. H. June 1.

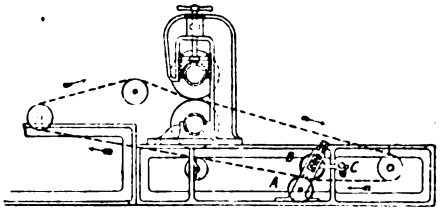

Paper machines.—The felts are passed, face downwards, between squeezing-rollers after rinsing. The rollers A, B are placed in an inclined position, the material being delivered to them, so that it comes in contact with the upper roller first, after passing under a row of rinsing-jets C. The lower roller A has a perforated covering of metal or other material, upon a spirally-grooved or perforated core, to allow the passage of liquid through the roller. The upper roller B may be of wood, or covered with vulcanized rubber. The apparatus may be combined with paper-making machinery, as shown.

7633. Groth, L. A., [*Schnurmann, H.,* and *Closs, G.*]. June 7.

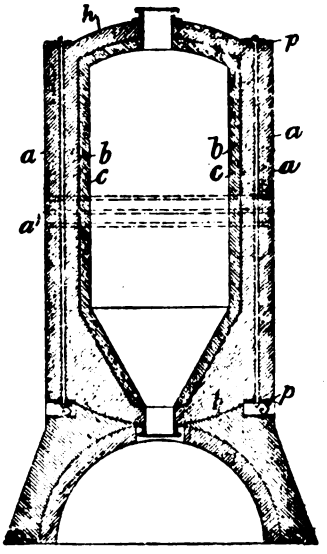

Boiling.—The boilers used in the sulphite-cellulose process are made of beton *a* lined with lead *b* and masonry *c* and bound with iron bands a^1. The ends are provided with caps *h*, fastened to annular plates *p* by strong screws *s*. The boiling solution circulates through an external steam heater, consisting either of three horizontal steel or copper cylinders, surrounded by casings for the steam, or of two iron cylinders, lined with lead and masonry, and traversed by copper tubes leading into a double cover. The steam heaters may also be used with horizontal boilers.

7663. Toppan, C. June 8.

Bleaching. — Relates to a compound for bleaching wood pulp &c. Equal parts of oil of mustard seed, melted paraffin, and caustic soda are mixed to form a saponaceous compound, and with this mixture is thoroughly stirred twice its weight of pure tallow soap. The bleaching-solution is prepared by adding to one gallon of water in a suitable kier or vessel one ounce of the above mixture, one ounce of caustic soda, and one ounce of sulphate of soda. The solution is heated, and the pulp &c. immersed therein and boiled until the bleaching is effected.

Digitized by Google

7694. Hull, W., and **Walker, W. B.** June 8.

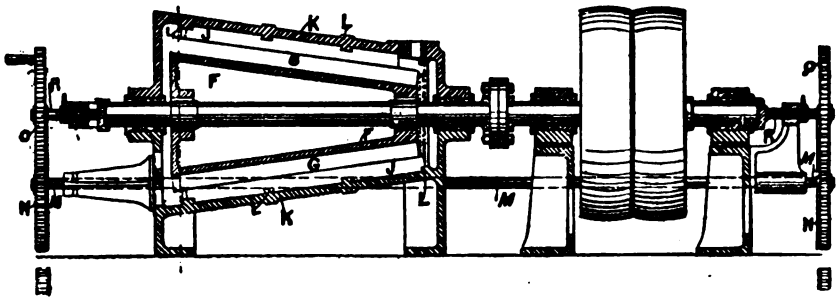

Pulping - engines are arranged in series. In the form shown the cone F is adjusted longitudinally by screws R, operated simultaneously by the gearing O, N and shaft M. The knives G are wedged by blocks of wood into slightly - dovetailed recesses in the cone, and may be secured by hoops. The other knives J are preferably fixed to the casing K by dovetailed projections L as shown, and are kept apart by blocks of wood. The casing K is divided horizontally into two parts.

7859. Dawson, B. June 11.

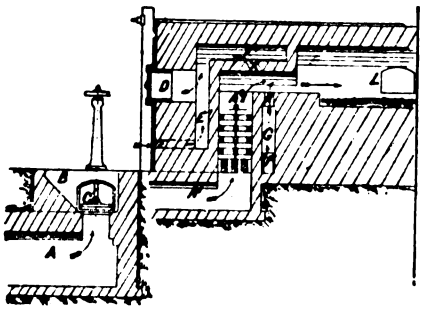

Waste products, treatment of.—Black liquor from paper works is evaporated, for the purpose of recovering the soda, in a pan or receptacle which is combined with apparatus for burning gaseous fuel in such a manner that the resulting flame and products of combustion are caused to pass practically over the entire surface of the waste liquor. The Figure shows a suitable gas apparatus in connection with an Arnot's incinerator. The direction of the gas supply is shown by continuous arrows, and that of the air by dotted arrows. The gas from the gas-producers passes through the main A and a mushroom valve C into the valve box B, from which it passes through two flues A^1 into the chamber A^2 partly packed with bricks. The air supply enters through openings D, E, and F, situated in the front and sides of the apparatus, and after traversing the chambers E^1 and G passes through openings K and H to meet the gas. The resulting flame &c. passes over the liquor in the evaporating-pan L.

7904. Weygang, C. June 12.

Sizing for making waterproof or other paper. A resinous, fatty, or oily size is first mixed with the pulp in the beating-engine, and a farinaceous size, consisting of starch or flour treated with a caustic alkali and turpentine, is afterwards added. The pulp is then treated with a solution of bichromate of potash or soda and with a solution of an astringent salt, such as alum or iron sulphate. If the paper is not required to be waterproofed, the resinous size and the bichromate may be omitted. If the pulp contains a substance, such as lime, which will have a material effect upon the farinaceous matter, a small portion of the farinaceous size or a starchy pulp is first added.

8148. Morfit, C. June 19. *Amended.*

Pulp, treating.—Paper is toughened by glutinous liquors, obtained by boiling certain sea-weeds, *e.g.*, Irish moss or agar-agar, and used either alone or in combination with resin soap and aluminous cake. The liquor is applied either to the paper pulp or to the sheet or web.

8256. Lake, H. H., [*Cole, H., Allen, H.,* and *Allen, S.*]. June 22.

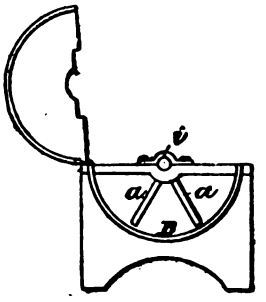

Raw materials, treating.—Manilla, jute, and other fibres are separated and cleaned for paper stock by an agitator, consisting of a cylindrical sieve B, in which is rotated or oscillated a shaft *i* carrying two sets of arms *a*. The arms are arranged alternately on opposite sides of the shaft, and the apparatus may be placed in a horizontal or inclined position.

Digitized by Google

8486. Haddan, H. J., [*Wærn, W.*]. June 28.

FIG. 1.

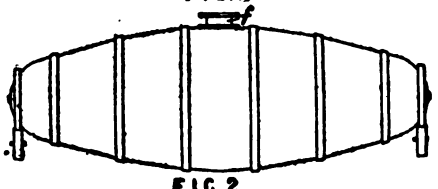

FIG. 2.

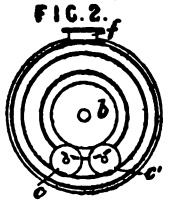

Boiling.—Consists of a metallic vat of an elongated shape, as shown in Fig. 1, for boiling cellulose &c. The ends are swung on trunnions; or each end may be fitted with a band *b*, Fig. 2, for rolling on the friction rollers *c*, *c*¹. There is a bung in the centre closed by a screw or other suitable stopper *f*.

8493. Wilkinson, A. June 28.

Raw materials, treating; bleaching; boiling; pulp, treating; papier mâché.—The fibre is first treated with quicklime and crystal soda and with acid to loosen the gum and resinous matters. It is then boiled with crystal soda, soap, potash, and bisulphite of sodium, and, if required, bleached with sulphohydrate and sulphuret of barium, cyanide of potassium, and oxide of calcium, or with chloride of lime dissolved with soda, sulphur, cyanide of potassium, and ammonia. A dry bleach may be made from sulphuric acid, salts of lemon or of tin, and solid ammonia. The fibre may be reduced by a beating-engine with water containing chloride of lime and sulphuric and nitric acids. When required for waterproofing purposes, the pulp has india-rubber dissolved in bisulphide of carbon &c. amalgamated with it. Waterproof paper suitable for covering damp walls can thus be produced.

8936. Davies, E., and **Harris, H. F.** July 8.

Materials, fibrous; raw materials, treating.—Relates to the treatment of spent hops for the production of pulp for paper and millboard. The spent hops, after washing and partially drying, are treated to separate the seeds from the petals in the rotating perforated cylinder D, containing propelling-vanes H. They then pass to the cylinder K, in which the petals are torn up by the blades N, acting with the foundation plate L. Finally, the pieces of stalk are sifted out from the torn-up petals, which are now suitable for use in the production of paper pulp.

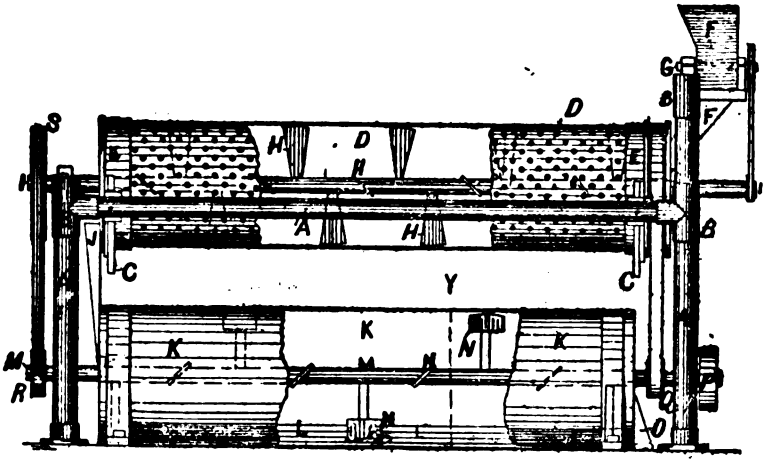

9178. Boult, A. J., [*Ubbelohde, A.*]. July 14.

Materials, fibrous; raw materials, treating.—Moss peat is soaked to separate the leaves from the stems &c., the former being bleached to form pulp directly, and the latter being passed through a rag-engine and used either by itself or with other stock. The tank A is divided into two parts by the sieve B, and the moss peat is stirred gently by the reciprocating lattice C.

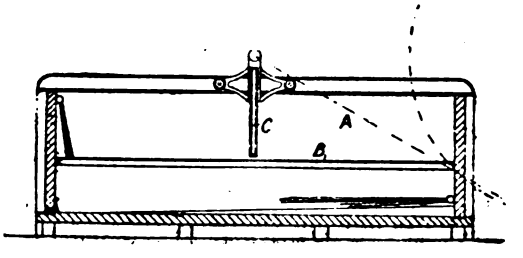

Digitized by Google

9358. Musil, E. July 19.

Colouring pulp or web.—Relates to paper for cheques, bills of exchange, and the like, the object being to detect fraudulent treatment of the same. The paper is dyed in the rag-engine, or during other process of manufacture, with substances which are sensitive to the action of acids, bleaching-agents, and alcohol, but not to that of water and light, such as indophenol, Congo red, alizarine, nitro-alizarine, alizarine blue, cœrulein, gallocyanine, catechu, anthracene dyes, &c. Fibres dyed with such substances may be incorporated with the pulp, which may be dyed as above or otherwise. The paper may also be printed with highly-sensitive colours.

9646. Elias, L. July 26.

Compound paper.—Consists of metal foil placed behind transparent cambric or waxed paper and sometimes backed by common paper, and applicable for packing and bookbinding purposes, and for making boxes &c.

9647. Roth, A. F. July 26.

Wood, grinding.—The grinding-stone *a* is mounted upon a frame *e*, which is hinged along one side *d* and adjusted by the screws *v*, operated simultaneously by a cross-shaft *b* and bevel-wheels *z*, z^1. Wood or wood waste enters by the passage *k*, passes between the stone *a* and the trough-shaped bed-stone *i*, and thence to the ledge e^4 and return passage *m*.

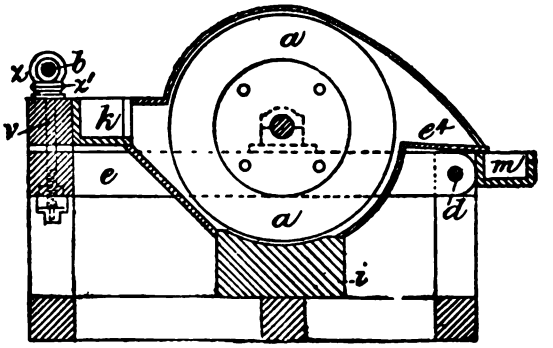

9885. Kron, R. July 31.

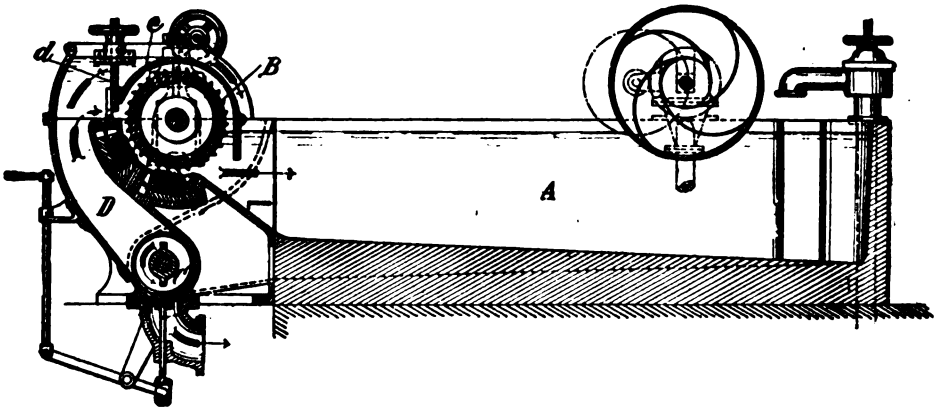

Pulping-engines.—Relates to rag-engines and other beating or grinding engines. The stuff behind the roll B is divided into two streams, which are re-united in the passage beneath or in front of the roll. A shaft carrying propellers and, if desired, additional mixers rotates in this passage, and the stuff passes from it through the passage D to the roll. The amount passing through the roll is regulated by the slide *d*, the overflow passing to the tank A by the passage *e* over the cover.

9968. Lake, H. H., [*Thompson, R. H.*, and *Norris, H. D.*]. Aug. 3.

Compound paper.—Paper or like material is corrugated longitudinally, and creased at intervals transversely along the lines *a* to form packing-material previously made up, if desired, into the

Digitized by Google

shape of the bottle &c. to be packed and covered with smooth paper.

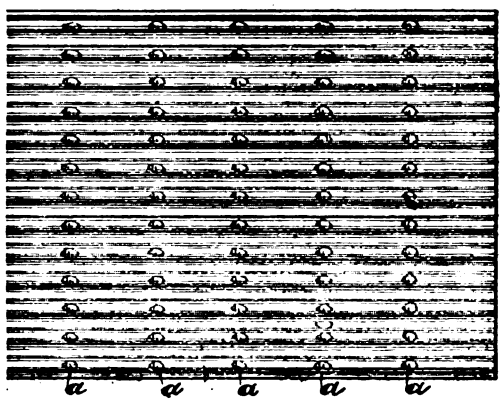

10,126. Edwards, S. Aug. 7. *Amended.*

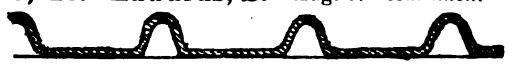

Corrugated paper.—Paper boards or the like for packing purposes are made with projections and indentations as shown, by passing over a roller or between rollers after leaving the felt of the paper-making machine.

10,237. Horne, J. H. Aug. 10.

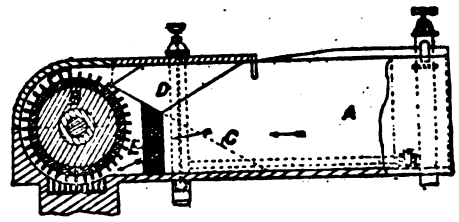

Rag-engines.—The pulp circulates around a vertical mid-feather A in a tub of square cross-section and a horizontal beating-roll B across one end. A suitable back-fall C and deflector plate D are provided to keep the currents entering and leaving the roll distinct from each other, and to spread out the currents to the whole width of the roll. A washer consisting of a reticulated screen E is placed angularly but vertically beneath the back-fall and extends behind the mid-feather. Suitable valves &c. for the admission and discharge of water are also provided

10,267. Scammell, J. B. Aug. 11.

Cigarette paper is made from tobacco leaves. The leaves are formed into a pulp with a suitable binding-agent, and the paper manufactured therefrom in the usual manner.

10,814. Russell, C., and **Cragin, P. H.** Aug. 24.

Strainers for pulp. Underneath the screen C is arranged a series of pumping-bars A, with concave sides as shown and extending above the surface of the liquid in the vat. These bars are mounted upon rocking shafts *a*, operated by the reciprocating bar *c* and connected with it by the arms *b* and latches *l*. Discharge openings *e* are made beneath the pumping-bars. Stationary bars or partitions B may also be provided.

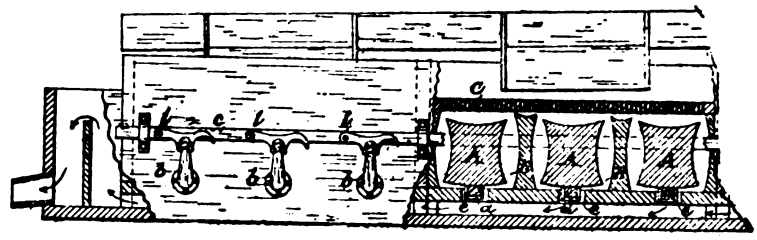

10,872. Elliott, G. W. Aug. 25.

Pulping-engines.—Grinding and pulping is effected between a stationary and a rotating grooved ring, the feed being introduced through the centre of the former. For pulping the machines are fixed in cisterns. The Figures represent one of the forms of grooving adopted. The rings are grooved both circumferentially and radially; their surfaces may be parallel, or they may be nearer together at the circumference than at the inside, as shown in Figs. 2 and 3 respectively. They may be stamped of wrought iron, cast whole or in segments, or built up of plates on edge.

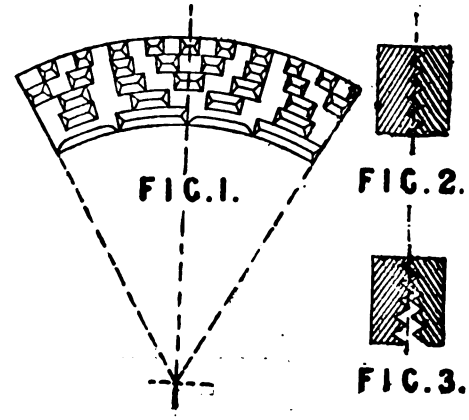

Digitized by Google

11,084. McFarlane, J. Aug. 31.

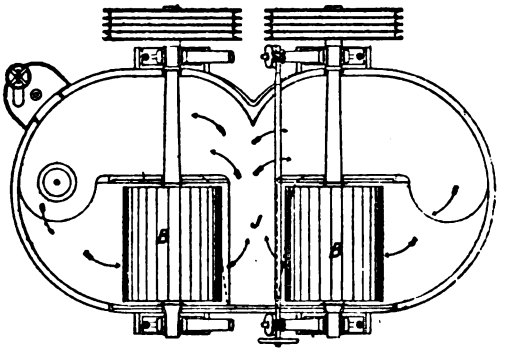

Pulping-engines.—The engine has two rolls B, which rotate in opposite directions and mix the pulp in a central space J. The rolls may be arranged as shown, or they may be arranged to work in a tub with a horizontal partition to effect a circulation in vertical planes. In the form shown the rolls and the central space have covers, and strippers are provided to clean the rolls. The rolls are adjusted by wedges worked by worm and screw gearing.

11,927. Rogers, H. J. Sept. 20. *Amended.*

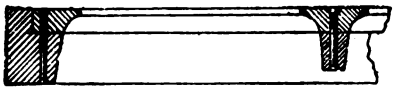

Strainers are renovated by cutting out the worn slotted parts and inserting new plates of hard rolled brass or other metal, which are secured to the old frames by riveting or otherwise. New strainers may also be made by inserting rolled plates into cast frames.

12,159. Weygang, C. Sept. 24.

Materials, fibrous; sizing.—In a system for reclaiming waste moorlands, the peat is boiled in an alkaline solution and then drained. The solid matter is transferred to a beating-engine and the pulp obtained can be employed in various branches of paper-making, such as the production of boards &c. The size used is ordinary resin size to which from 5 to 20 per cent. of turpentine is added. The resin is precipitated by acids or by aluminous salts and bichromate of potash or other chromic salt. When the peat is to be used to size or harden ordinary coarse papers, it is beaten to a very fine pulp and after mixing with the coarse paper an acid or acid salt is added.

12,217. Sinclair, R. D., and **Brown, J. G.** Sept. 25.

Antiseptic paper. — Resorcin, sometimes with eucalyptus oil, is incorporated with the pulp to render the paper antiseptic and germ-proof.

12,532. Wilson, J. H. Oct. 2.

Materials, fibrous; raw materials, treating; papier mâché. — Relates to the preparation of fibrous material for paper-making or for papier mâché from the plant Bauhinia Vahlii. The dried stems &c. of the plant are rubbed between roughened rollers which have rotary and longitudinal reciprocatory motions to disintegrate the fibres and separate the bark. The fibrous portion is then washed and treated with an oxidizing-agent, such as chlorine water, for the separation of the gummy &c. matter. The fibres are then assorted and the best bleached by a suitable agent.

13,286. Frank, A. Oct. 18.

Waste products, treatment and utilization of.—The free and combined sulphurous acid in the spent lyes, obtained in the manufacture of cellulose by the sulphite process, is precipitated in the form of calcium monosulphite by means of lime or proper calcium salts. The calcium monosulphite is cleansed from adhering organic substances by elutriation or by washing with a solution of sulphurous acid or of the acid sulphite of an alkali or alkaline earth. It is then converted by partial decomposition with sulphuric acid into sulphite of lime, calcium sulphate being obtained as a bye-product. If from the acid sulphite of lime thus obtained a solution of acid sulphite of magnesia is to be prepared, the lime is precipitated as calcium sulphate by adding magnesium sulphate. Acid soda sulphite solutions may be prepared by decomposing the calcium monosulphite with acid sulphate of soda, calcium sulphate being precipitated as a bye-product. If the lyes are finally to be used as forage or manure, a mixture of carbonic acid and air is passed through the solution for the removal of free caustic lime and the oxidation of the remaining sulphite of lime.

13,827. Makin, B. Oct. 28.

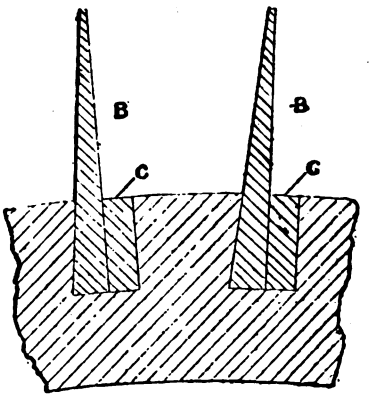

Rag-engines.—The cylinders A have taper blades B fitted into grooves and secured by wedges C or otherwise.

Digitized by Google

14,274. Rogers, W. Nov. 5.

Copying-paper.—Consists in the preparation or treatment of copying-paper, more especially that employed for copying old documents &c., with a chemical solution or preparation which will act on the ink and cause it to copy more readily and clearly by dissolving the dried ink and forming a dark-coloured compound with the same, part of which becomes deposited in the substance of the copying-paper. A preparation or solution may be formed by dissolving half an ounce of oxalate of ammonium, potassium, or sodium, twelve grains of ferrocyanide of potassium, and one grain of vanadate of ammonium in one quart of water. The solution may be mixed with the paper pulp during the manufacture.

14,361. Harris, I. B. Nov. 6.

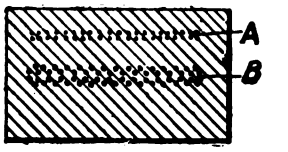

Paper machines.—The deckle straps are provided with a band or bands of elastic cloth A near the surface in addition to the ordinary band of non-elastic cloth B in the centre, in order to prevent cracking.

14,492. Lake, H. H., [*Smith, C.*]. Nov 9.

Dandy rolls.—The roll consists of longitudinal wires b^2, held between helical wires c^2, and covered with the cloth d^2. It rotates upon blocks slotted and provided with springs to allow a slight vertical movement on the rectangular shaft b. This shaft is hollow to admit water and is perforated at the bottom only. Stops e prevent lateral movement of the roll.

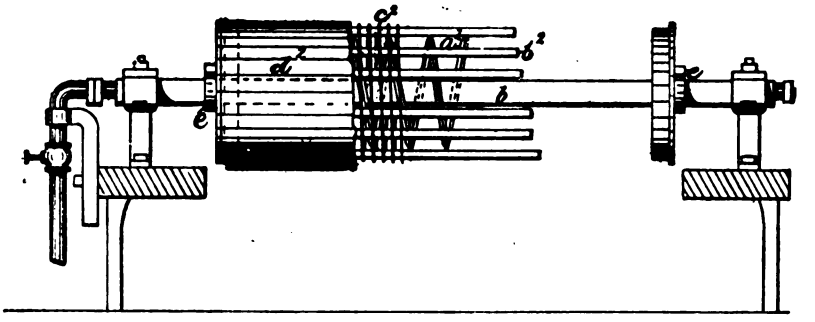

14,603. Kron, R. Nov. 11.

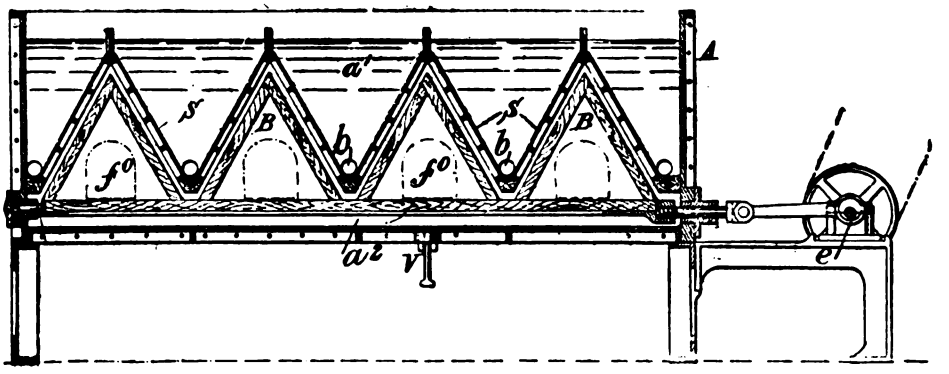

Strainers.—Inside the open trough or tank A is fitted a perforated zig-zag surface S, which divides the tank into the two compartments a^1 and a^2. In the compartment a^2, and actuated by the eccentric e, is arranged the shaking-appliance B for preventing clogging, the upper surface of which corresponds in shape to that of the sifting-surface S. The materials that are too large to pass through the sifting-surface are discharged through the pipes b, but those passing through are discharged through the openings f^o. The lower compartment a^2 may be emptied by lifting the valve V. Several modifications are described in which the sifting-surface may be corrugated, tooth-shaped, or formed of separate V-shaped pieces ; the shaking-appliance may also be driven by vertical rods actuated by eccentrics.

Digitized by Google

14,614. Allport, D. Nov. 11.

Paper boards.—Paper or pulp is strengthened with wire, incorporated with it in the form of gauze or otherwise, and may be afterwards waterproofed or toughened and corrugated to form a strong material for boxes and other packages, roofing, machine belting, chair seats, panels, and other purposes.

14,673. Hermite, E., Paterson, E. J., and Cooper, C. F. Nov. 12.

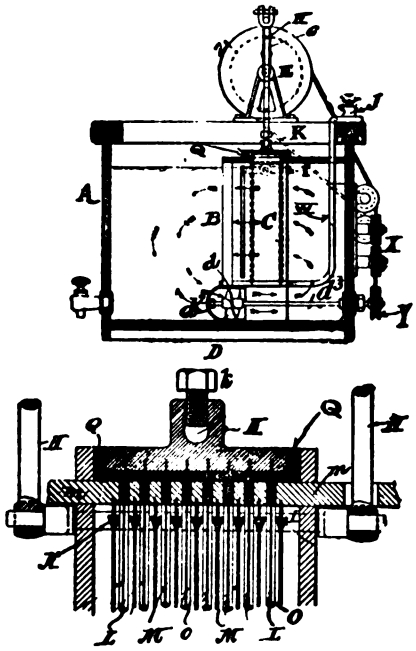

Bleaching.—Relates to apparatus for preparing by electrolysis solutions for bleaching, and refers more especially to the invention described in Specification No. 13,929, A.D. 1884. The tank A is divided into two parts by a division B with two openings, the upper allowing communication with the electrodes C and the lower, covered with a strainer d^2, leading into a tube d containing a screw or propeller D on a shaft d^3 passing out through a stuffing-box. The electrodes are platinum L and zinc M; the latter are connected at the bottom with a bar W proceeding from the terminal J, and at the top pass into grooves in the cover m. The platinum sheets are cast in a block K, carrying a terminal screw, and are protected at their upper ends by insulating-material Q; the sides of the sheets are held in grooves in rods O. The zinc electrodes are kept clean by pairs of knives N pivoted in a frame I and pressed against the opposite sides of the plates by elastic bands. This frame is reciprocated by rods H and a crank shaft G, which is driven by pulleys v and connected also by a cord and guide-pulleys X with the driving-pulley Y of the screw propeller. The electrodes are contained between side walls, so that the liquid circulated by the screw D is compelled to pass between the electrodes. The tank A in which the solutions are prepared may be combined with any suitable bleaching-vessel, and such a combination with a "potcher" for bleaching paper pulp is described.

14,864. Smith, R. Nov. 16.

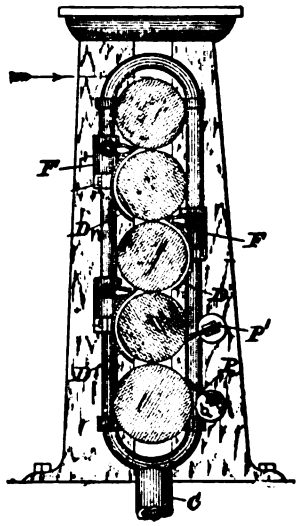

Calendering.—The paper is led between and around the rolls by the deflectors D, arranged alternately on each side as shown. The upper part of each deflector is in contact with a roll and is provided with a hollow perforated rib, through which passes a current of air from the tube C. The deflectors are mounted at one end upon the adjustable sleeves F, so that they may be swung away from the rolls. At the other end they are connected by adjustable eccentrics to a lever, which moves them simultaneously. At the last pair of rolls doctors P, P^1 are provided to lead the paper away and to remove obstructions from the rolls.

15,006. Routledge, T., [*Abadie, A.*]. Nov. 18.

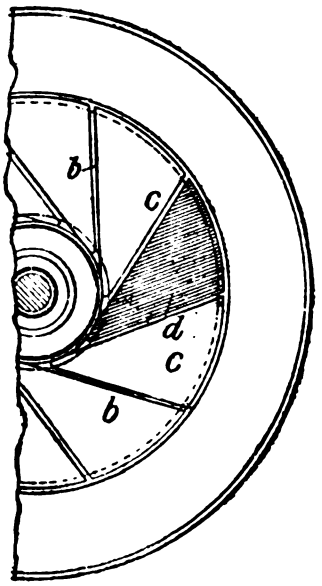

Pulping-engines.—Grinding-surfaces for grinding &c. fibrous and other materials are composed of hard and soft strips arranged alternately. The Figure shows in plan the pan C of an edge-runner mill; b, b are fixed or removable partitions, and the alternating hard and soft strips are shown at d. The invention is stated to be specially applicable for use in paper-making.

Digitized by Google

15,294. Howard, F. B. Nov. 23. *Drawings to Specification.*

Papier mâché.—Relates to such articles as signboards, panels, and the like, on which it is desired to have patterns, designs, figures, and letters raised or sunk. These may be used generally in place of articles made from carved wood. A roughly-moulded mass of wood or other pulp is first prepared, and this is acted upon to produce the required configuration or pattern in one of three ways; it may be passed between a pair of rollers, a single roll may be made to travel over it, or it may be compressed under a die in a mould. The articles are dried and hardened, and may be waterproofed and painted, varnished, or gilded. Additional designs &c. may be attached by adhesive or mechanical attachments.

15,430. Bédart, G. A. Nov. 26.

Paper machines combined with printing-machines. A printing-machine is arranged to act on the paper before it leaves the paper-making machine. In the Figure, the paper, after leaving the last drying-rolls F, either passes between the cylinder A and the type cylinder T, or successively between the perforating-cylinders *z*, the stretching-rollers *y*, and the cylinders B, T.

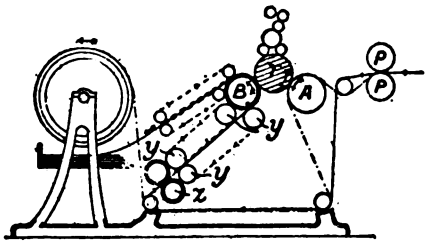

15,856. Blackman, H. Dec. 4.

Raw materials, treating; boiling; pulping-engines. — The fibrous substances are digested under pressure and *in vacuo* and rinsed in the closed vessel A, and are then discharged through a nozzle *b* against a screen *d* in the vacuum chamber B. The vessel A is formed with a water jacket *g*, the water being circulated by the pump a^3 and kept at the same pressure as the interior of the digester by the connection g^4. The circulation in the digester is effected by the pump P. A vacuum is maintained in the chamber B by the shower pipes *e*, e^1. The grit is separated from the mass by precipitation in a series of traps in the vessels C. The mass is pulped by forcing through passages in the vessel F, containing stationary or reciprocating obstructions. These obstructions are preferably in the form of corrugated plates as shown. After being subjected to the action of reciprocating or rotary scrubbing-brushes, the mass is washed and bleached in any ordinary manner.

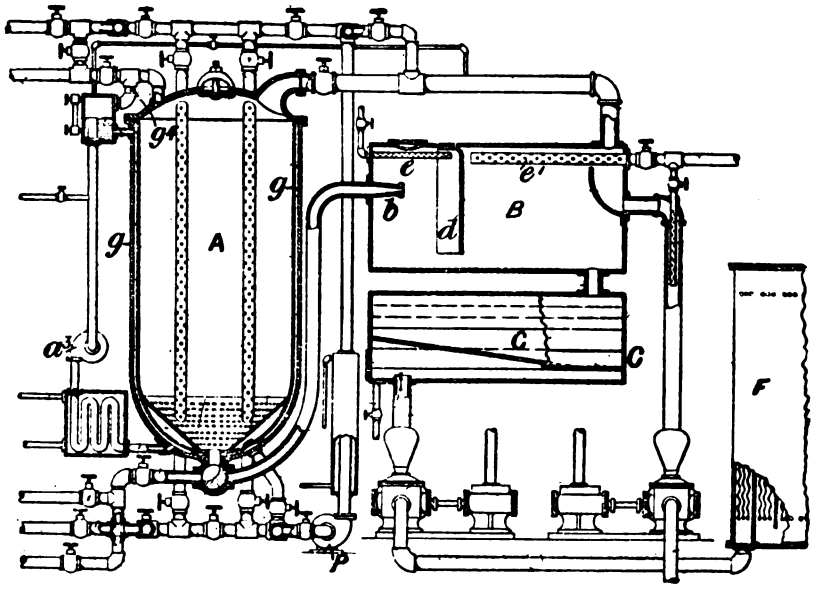

15,887. Nast, W. F. Dec. 4.

Materials, fibrous; raw materials, treating.—Relates to the treatment of stable manure and the like to obtain ammonia and a residual product which may be used for any manufacture wherein fibrous pulp is employed. To cause the ammonia to come off more easily and completely when the manure or

Digitized by Google

other organic matter is heated in a closed vessel with lime, soda, potash, &c., a small proportion (2 to 5 per cent.) of sodium or other chloride is added. The evolved ammonia is absorbed in any acid, as required, and the residue, almost entirely free from ammonia, is ready for use.

15,942. Kellner, C. Dec. 6.

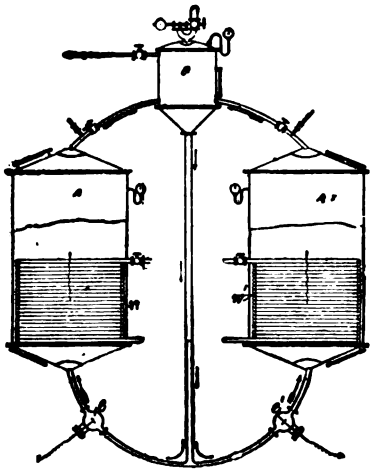

Raw materials, treating.—Relates to the manufacture of cellulose for paper-making. Wood, grass, stalks, or other suitable vegetable substances are boiled or heated in a solution of a compound, preferably a metallic chloride, which is decomposed by an electric current into bodies adapted to dissolve the incrustations or foreign admixtures of the cellulose. The wood &c. is placed in the digesters A, A^1, and the solution of sodium chloride, for example, is heated by steam introduced through the coils *w*, w^1. The liquid circulates as indicated by the arrows and is decomposed beneath the digesters by an electric current passing between the carbon electrodes *e*, e^1. The incrustations of the wood &c. in one digester are subjected to the oxidizing action of the chlorine from one electrode, and the resins &c. in the other are saponified by the soda ascending from the other electrode. The products of decomposition meet in the vessel B and re-act on each other to again form sodium chloride. The current may be alternated at intervals to accelerate the action.

16,113. Walton, J. M. Dec. 9.

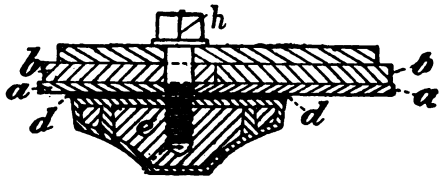

Boiling.—Relates to boilers for paper and other pulp made from wood or other fibre. The joints between the sections of the lead lining *a* are covered with thin strips of lead *d*, which are held in place by lead-covered cast-iron blocks *e*, placed end to end and secured to the boiler *b* by the screw bolts *h*. The strip *d* may, however, be dispensed with, in which case blown joints are made between the blocks.

16,411. Lorimer, J. K. Dec. 14.

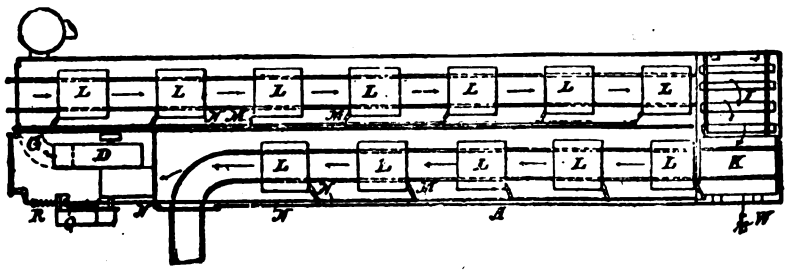

Pulp, treating; bleaching; drying; paper boards.—Relates to the treatment of paper pulp and paper boards. The material is dried in trucks L running upon inclined rails in a tubular chamber A, air, which may be impregnated with bleaching and disinfecting agents, being drawn through in the opposite direction by means of a fan D. Two or more of these chambers may be arranged side by side, the rails of the one being inclined in the opposite direction to those of the other, so that the trucks will pass continuously through the chambers; the trucks are transferred from one chamber to the other by a trolley K which moves upon transverse rails I inclined in the required direction, the trolley being brought back to its original position by means of a weight and cord passing over the pulley W. By means of a connecting-pipe G the air &c. may be caused to circulate continuously through the apparatus. For causing the trucks to move in an intermittent manner through the chambers, they are held in place by suitable stops M connected together by rods N which are drawn into the locking position by a spring R and locked by a catch Q, which may be released automatically by

Digitized by Google

suitable mechanism connected with the engine or with the blower D. The rails may, if desired, be horizontal, and the trucks propelled through the chambers, or the trucks may be made to run on overhead tracks.

16,483. Herz, L. Dec. 15.

FIG. 1

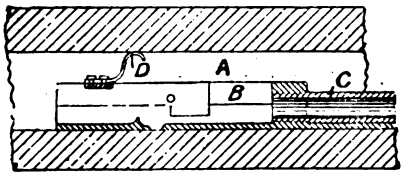

FIG. 2.

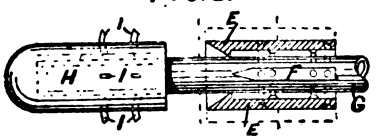

Cylinders.—Relates to a tool for cutting square holes, or for converting cylindrical into rectangular holes, in the wooden cylinders used in the manufacture of paper &c. There are two forms, one, Fig. 1, in which there are two blades, and the other, Fig. 2, in which there are four. In the first form the two blades A, the edges of which are at right-angles, are secured as in a plane to the body B fixed to the end of a handle C. A spring D serves to guide the tool and press it downwards In the second form, Fig. 2, four blades E with their planes at right-angles are secured by pieces F to the handle G, to the front of which is fixed a rounded guide-piece H from which the leading cutters I project as shown.

16,715. Bentley, D., Bentley, G., and **Jackson, J. B.** Dec. 20. *Drawings to Specification.*

Cylinders for paper-making are made with a barrel, convex, or longitudinally-curved shape in special grinding or turning apparatus, the object being to compensate for deflection due to their weight when in use.

16,765. Lorimer, J. H. Dec. 21.

Drying ; bleaching.—Relates to apparatus for drying and bleaching paper pulp, wool, cotton, rags, and other fibrous or textile materials. The material is passed through a chamber H in a zig-zag manner between two endless aprons A, B of suitable openwork material, while air, which may be heated, is forced or drawn by the fans J through the chamber, and the sulphurous acid, chlorine, or other gaseous bleaching-agent is passed into the air-supply pipe I or admitted by jets T between the folds of the aprons.

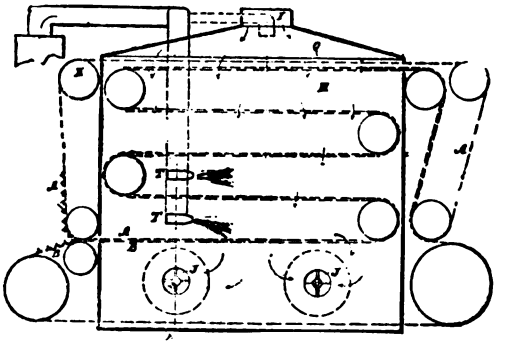

16,780. Lorimer, J. H. Dec. 21.

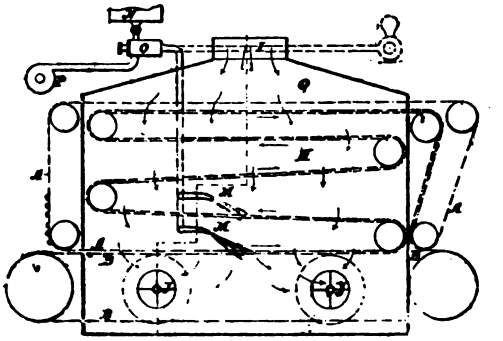

Pulp, treating.—Relates to apparatus for drying, bleaching, colouring, disinfecting, or otherwise treating materials such as paper pulp. The materials are passed through a chamber H in a zig-zag manner between two endless aprons A, B of suitable openwork material, while air, which may be heated, is forced or drawn by the fans J through the chamber, and the bleaching-agent &c., contained in a tank N, is forced by a fan P and injector O into the air-supply pipe I or between the folds of the aprons as shown at M.

16,935. Pass, E. de., [*Soc. Industrielle et Commerciale des Métaux*]. Dec. 24.

Wire-cloths.—Relates to a method of coating metals which is stated to be applicable for wire-cloths. A preservative coating of sulphocyanate or cyanate of copper is produced upon copper or its alloys, which may be directly or indirectly adherent ; in the former case, the coating is produced by dipping the article in the acid or in a suitable solution, or by making it the positive electrode of a suitable electrolyte ; in the latter case, the powdered salt is mixed with a solution of caoutchouc or similar substance, and then applied to the surface to be protected. Cupric or cuprous salts may be used.

Digitized by Google

17,040. Schofield, H. Dec. 29.

Stuff-taps.—Relates to means for automatically opening the stuff-tap to free it from obstructions. The sliding valve F is connected by an adjusting-screw E and connecting-rods D to the piston of a steam cylinder A. The valve is held in position by the weight G on the piston-rod C. When the tap is obstructed, the reduced flow of pulp allows the lever I to turn about K and open the valve N to admit steam to the cylinder A and also to the whistle P. The valve F is then raised until the obstruction is removed and the steam shut off. The steam escapes through an exhaust at the top of the cylinder, and the valve F falls to its adjusted position. The valve can be raised by hand when required by means of the handle Q.

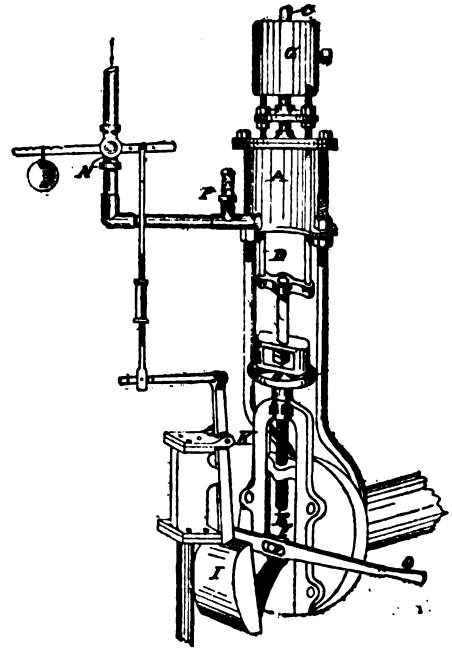

A.D. 1887

120. Turner, W. H. Jan. 4.

Sizes.—A size for transfer paper is made by boiling 2 lbs. of soda with 1 gallon of water, and adding ½ lb. of white lead and 1 pint of linseed oil.

746. Edwards, E., [*Nacke, E. H.*]. Jan. 17.

Rag-engines.—A centrifugal circulating-wheel *f* draws the pulp through a hole *i* in the transverse partition *b*. The axis may be vertical or inclined, and the wheel may be used in combination with a grinding or cutting disc and a corresponding bed-plate. A board *c* may be arranged above the wheel to divide the pulp into two separate currents.

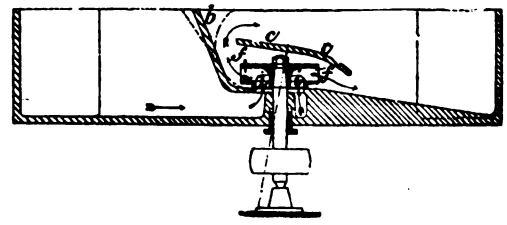

Digitized by Google

759. McGrath, P. W. Jan. 18.

Cigarette paper. — Consists in manufacturing paper for making cigarettes from the stems or refuse or other portion of the tobacco plant.

---

910. McFarlane, L. Jan. 20.

Calendering. — Consists of a machine for removing and inserting paper in plate calenders. Four balanced platforms *a* are arranged around a tubular standard *q*, which carries three hollow arms and is oscillated through a quarter of a revolution. The arms have mouths *s* at the end, which are connected alternately to an exhaust fan through *q* and a compressor through e^1 by the valve c^1 in order to transfer the plates and sheets from platform to platform. Each platform is lowered when required by a rack c^2, which engages with a toothed segment operated by a pawl on a cam-actuated lever. The arms are oscillated by a pinion *v* engaging with a rack r^3, which also

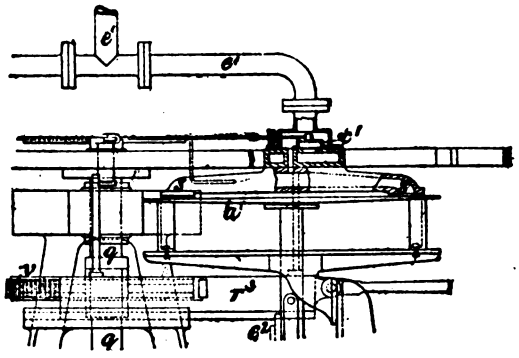

carries stops for operating the valves c^1. The pile of plates and glazed sheets is placed opposite to the pile of rough paper.

1808. Lake, H. H., [*Marshall, F. J.*]. Feb. 4.

Pulping-engines. —A pair of grinding-discs A, B, faced with knives, is used in combination with an ordinary pulping-engine. The disc A is keyed to the rotating shaft I, which with the cone R can be adjusted longitudinally by means of the screw J. The disc B slides on keys bolted to the case P, and is adjusted by means of the collar G, having on the outside a coarse screw thread to engage with the collar C. This collar has also teeth on its outer edge to engage with a worm H, mounted on standards bolted to the case P and operated by the wheel V.

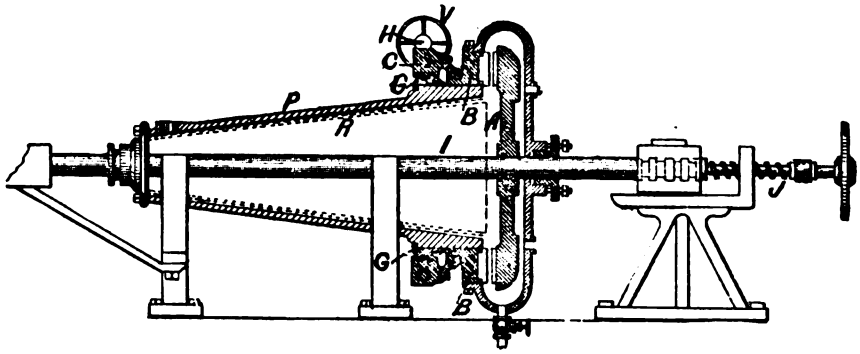

1816. Boult, A. J., [*Rubay, F.*]. Feb. 4.

Bleaching.—Consists in the composition and methods of applying chemical baths for bleaching fibres, yarns, &c., stated to be applicable also for bleaching paper pulp. In the case of linen, hemp, tow, and yarn, the material is immersed first for some hours in a hot bath of lye composed of carbonate of soda, caustic soda, and potash; it is then washed and immersed in a bath of chloride of lime, and after again washing it is immersed in a sulphuric acid bath. A quarter white is thus obtained, and by repeating these processes a half, three-quarters, or full white is obtained. In the case of tissues, other than jute, these are immersed in a bath of chloride of lime, soda or potash, and saccharic and acetic, or saccharic and oxalic acids until the required degree of whiteness is obtained, after which they are repeatedly subjected to the action of alkaline lye. In the case of tissues dyed with colours which are not to fade, a bath of chloride of lime, soda or potash and barium dioxide, and nitrate of strontia or nitrate of soda or potash is employed. Jute either in yarn or tissue is bleached in chloride of lime and soap.

1993. Hermite, E., Paterson, E. J., and **Cooper, C. F.** Feb. 8.

Bleaching pulp. Relates to the method of bleaching by electrolysing a solution of magnesium chloride which is described in Specification No. 13,929, A.D. 1884, and consists in apparatus comprising a separate vessel containing the electrodes, which are arranged in various ways so as to expose a large surface, and means for keeping the zinc electrodes clean. The Figures are respectively transverse and longitudinal sections of one arrangement. The tank C receives the bleaching-liquid

Digitized by Google

from the bleaching-vessel by a pump discharging into the perforated pipe F at the bottom of the tank, and delivers the electrolysed solution into overflow channels G which empty into an end

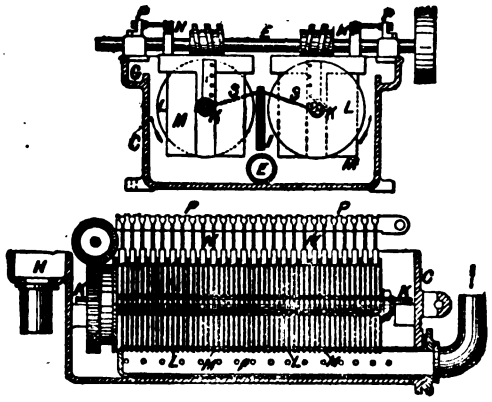

channel H leading back to the bleaching-vessel. Within the tank are journalled two shafts K rotated by worm gear E and carrying circular zinc electrodes L, between which are suspended platinum or platinized plates M from frames connected by bolts N with racks P. These racks are insulated from the tank and are connected with one pole of the dynamo or other source of electricity, while the other pole is connected with the tank and thence with the zinc electrodes. Secured to the partial partition L in the middle are scrapers S which press against the zinc plates and against the shafts K to remove any deposit thereon. Instead of these, elastic scrapers may be fixed to the platinum electrodes to act on the zinc plates. Other arrangements of ports for sending the liquid between the electrodes are described; the zinc electrodes may be cylinders rotating close to semi-circular platinum electrodes; or the zinc electrodes may be cylindrical rods reciprocating within tubular platinum electrodes and scrapers; or zinc cylinders may be rotated within concentric platinum cylinders and scrapers. Plumbago or surfaces covered therewith may be substituted for platinum.

2133. Bentley, G., Jackson, J. B., and Macnarey, J. Feb. 10.

Cylinders or drums for paper-making machines &c. To prevent the distortion of cylinders constructed according

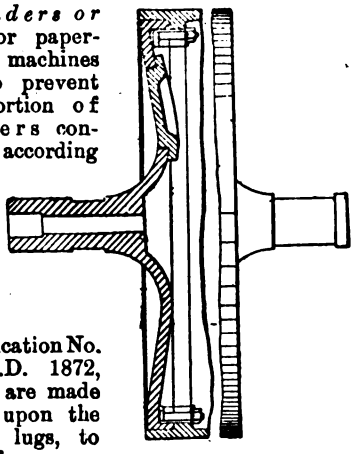

to Specification No. 1346, A.D. 1872, the ends are made to bear upon the inside lugs, to which they are bolted. The lugs may be provided with projections, which partly enclose the washers, and they may be formed as a continuous or nearly-continuous flange.

2830. Johnson, J. Y., [*Crawford, M.*]. Feb. 23. *Drawings to Specification.*

Materials, fibrous.—The lint or short fibre removed from cotton seed &c. by special apparatus is applicable as a paper stock.

2935. Dickson, J. Feb. 25.

Pulping-engines, roller bars and bed-plate bars for. Bars of steel for making roller and bed-plate bars are placed in a converting-furnace in such a manner as to be hardened on one side only, the ends and the other sides being protected with fireclay &c. They are then rolled or hammered to the necessary size and shape and finished in the usual manner.

3927. Russell, C., and Cragin, P. K. March 15.

Strainers.—Underneath the pulp strainer or screen C is arranged a series of pumping-bars A, mounted upon rocking-shafts *a* and provided with longitudinal ribs *r* along the top. The screen is mounted in a hinged frame F provided with longitudinal strips *d* to fit into recesses at the top of the partitions B. Instead of this the bars may be pivoted near the top and hollowed out on

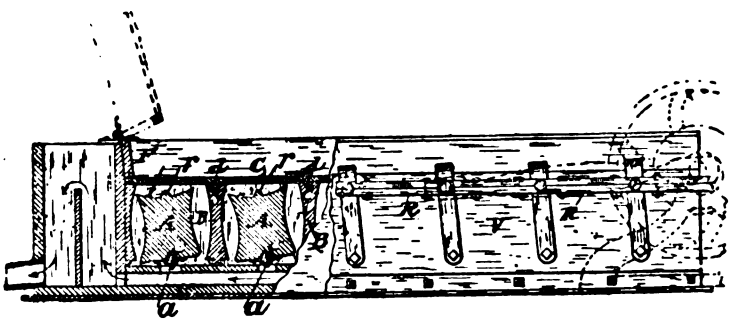

Digitized by Google

each side of the shaft, and the screen may carry a number of longitudinal barriers over the shafts. One side of the vat V has openings which are closed by plates having bearings for the rocking shafts.

3937. Wilkinson, A. March 15.

Raw materials, treating; boiling; bleaching; weighting pulp. — The fibre is first treated with chloride of lime and sulphuric or hydrochloric acid, and is then boiled at any suitable pressure in a vessel containing (preferably) spent chlorine liquid with crystal or caustic soda and hydrochloric or sulphuric acid. The fibre thus treated is then washed, again boiled, washed, and treated in sulphuric or hydrochloric acid. The mass is bleached with sulphite or sulphate of barium and acid, to which is added, after an interval, bisulphite of lime or magnesia and hypochlorite of soda. In the case of esparto grass, straw, &c., the fibres are first treated in a solution of quicklime and washing soda with acid. For loading the pulp, rice and animal size, with china clay &c., are used, and a little starch or borax added.

4058. Thompson, J. March 17.

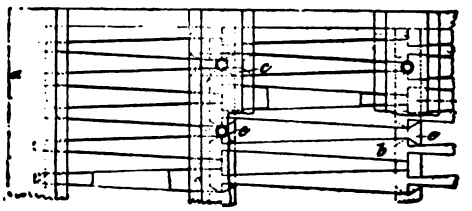

Strainers.—Strainer plates are made in two parts *a*, *b* with a series of tapered bars and spaces or the like, which allow the parts to fit together in order that the width of the slots may be adjusted. The parts are moved relatively to each other in a longitudinal direction by any suitable means, and lateral motion is prevented by blocks *c*, secured to the part *a* and working in slots in the part *b*.

4073. Rogers, H. J. March 18.

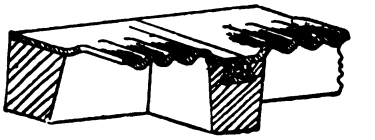

Strainers. — Underneath the strainer-plate is a rubber or other diaphragm, which is vibrated by hydraulic power, toggle-levers, or electricity. In the first case a plate attached to the diaphragm is operated by the piston of a cylinder, which is connected to another cylinder, containing a piston worked from the crank shaft of the machine. In the second case the toggle-levers are operated directly by a connecting-rod, and in the third case an alternating current is passed through a series of electromagnets. The strainer-plates themselves are corrugated as shown, the slits being made at the top of the ridges to allow the dirt and impurities to collect in the depressions. The plates may be formed in sections and arranged for the renewal of worn plates as described in Specification No. 11,927 AD. 1886.

4600. Dahl, C. F. March 28.

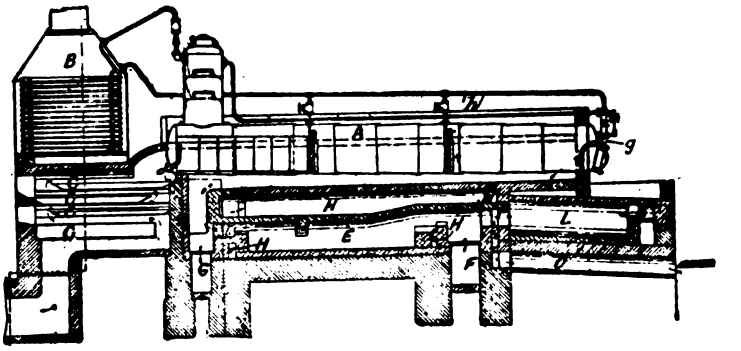

Waste products, treatment of.—Relates to the recovery of salts contained in the lyes used in the manufacture of fibre or cellulose from wood, straw, and other fibrous vegetable substances. The lye is placed in two kettles A, made in compartments and arranged side by side. It is heated by gases from the furnaces underneath, and the first compartments have an internal concentric plate to aid circulation of the lye and to prevent incrustation on the kettles. The vapours, being freed from the lye by two perforated plates in the domes covered with iron shavings, pass to a worm in the boiler B, in which the lye, which is conveyed from the kettles A through blow-off pipes *g* and the pipe *h*, is further concentrated. The lye then passes to the evaporating-pans C, and is further concentrated by the gases which have heated the kettles A. It is then removed to the inspissating-furnace E, heated from the fireplace F. The gases, passing from this furnace, mix with the heated air from the casing H and are consumed by the flame from the fireplace G, from which the products pass to and circulate around the kettles A. The side doors, through which the lye is stirred and afterwards removed, are arranged to prevent the escape of noxious gases. Finally, the incrusting substances are consumed and the salts melted in the furnace L, from the

Digitized by Google

bottom of which the salts are drawn off. This furnace is formed similarly to the furnace E, the gases mixing with the heated air from the casing O and passing over the fireplace F.

4953. Brin, A., and Brin, L. Q. April 2. *Drawings to Specification.*

Bleaching pulp. The pulp is subjected to the action of an electrified mixture of chlorine and oxygen gases. It is kept in a state of agitation during the bleaching process, and the unabsorbed gases are collected and re-used.

5269. Pitt, G., [*Pictet, R. P.*, and *Brélaz, G. L.*]. April 9.

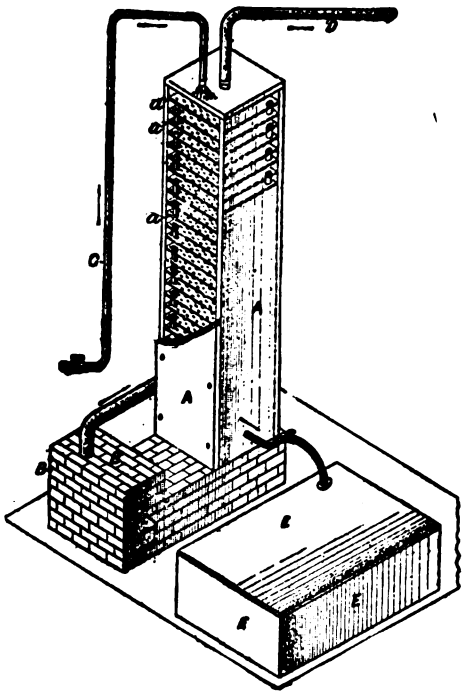

Boiling.—In making paper pulp from wood, a weak solution of sulphurous acid is first produced, and is afterwards enriched. The sulphurous acid and nitrogen from the pyrites-roasting furnace B pass to the column A, having perforated shelves *a*, as shown. Water enters by the pipe C and the nitrogen escapes through the pipe D. The weak solution flows into the reservoir E, and thence passes to two digesters. One of these digesters is heated and the sulphurous acid is driven from it into the other, which also contains the wood to be treated. When the reduction of the cellulose is effected, the functions of the digesters are reversed. The heating of the first is stopped and it is filled with a weak solution, which is enriched by the gas from the second.

5296. Bastet, L. April 12.

Waterproof paper. — Relates to waterproofing fireproof and other paper or boards. The asbestos or other paper is waterproofed with a mixture of mineral oil, stearic acid, tallow, Fucus or Irish moss, and caustic alkali, mixed with the pulp in the engine.

5406. Bertram, W. April 14.

Drying.—Sized or unsized paper is dried in the web or in sheets by means of dried air, which may also be heated and which is caused to act upon the paper by a pump, fan, or other means.

5425. Bertram, W. April 14.

Drying.—Air, after being forced through a heating-apparatus and a condenser to deprive it of moisture, is directed against the web of paper, passing over the rotating frames *h*, by the fans J. The air is distributed from the main pipes through radial pipes I to the perforated hollow axes K of the frames. The frames are mounted in adjustable spring bearings *m* and the pipes I fitted with stuffing-boxes *n* to allow them to move radially.

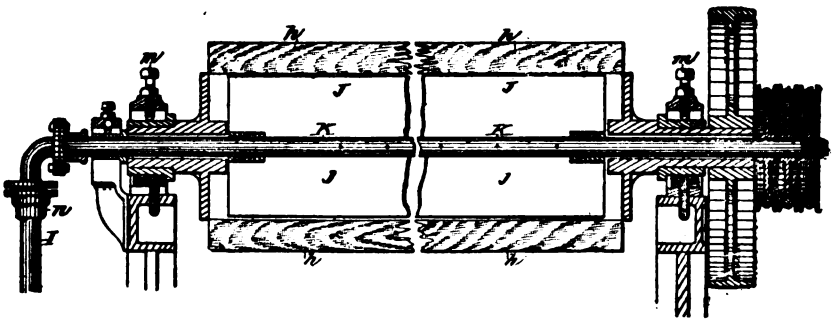

Digitized by Google

5528. Goodall, T., and **Webster, T.** April 15.

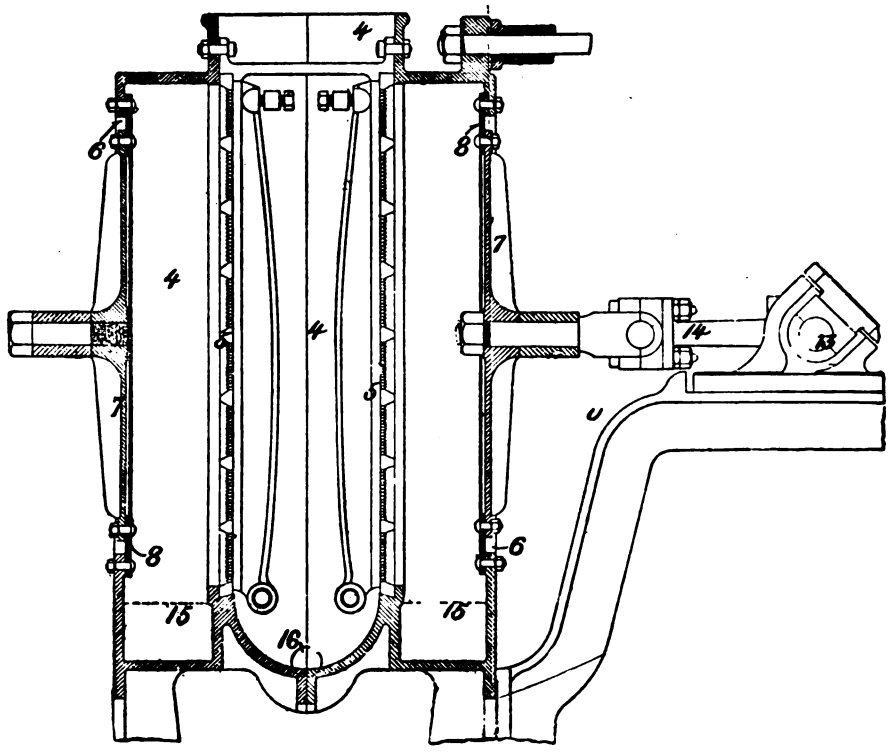

Strainers.—Two strainer plates 5 are arranged at a suitable distance apart in a vat 4, and the pulp is admitted between them. On each side of the vat 4, opposite the strainer plates, is a disc 7, which is connected to the edges of a hole 6 by a flexible diaphragm 8. These discs are connected by rods working in guides outside the vat, and are reciprocated by a connecting-rod 14 from a crank shaft 13. The strained pulp passes out at 15, and the dirt &c. at 16.

5649. Barataud, C. April 18.

Pulping-engines.—The roll is formed of plates C, D, E, connected by groups of helical blades F and alternate strips of wood J. The blades *b* are separated from each other by wooden wedges *e*. The casing is preferably in two parts connected by straps, and is formed with longitudinal plates I, having a smooth or threaded surface. These plates are held in position by wooden wedges and by screws *f*, *g*. The spaces between the plates may be left smooth, but have preferably a triangular screw thread cut upon them.

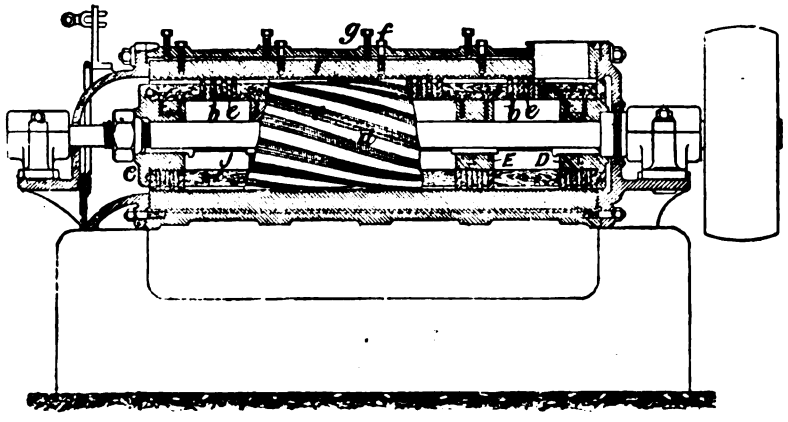

Digitized by Google

5805. Moir-Crane, P., and **Wilkinson, F.** April 21.

Corrugated paper; paper machines.— Paper for packing bottles and other fragile articles, and for carpet linings &c., is corrugated in the pulp state. The pulp from the rag-engine passes over endless wire webs *b*, and is pressed upon them by other endless wire webs *c*, weightd by vertically-movable rollers *e*. Both sets pass also between squeezing-rollers *a*. The sheet of pulp is corrugated by the rollers *g* and then allowed to dry and set.

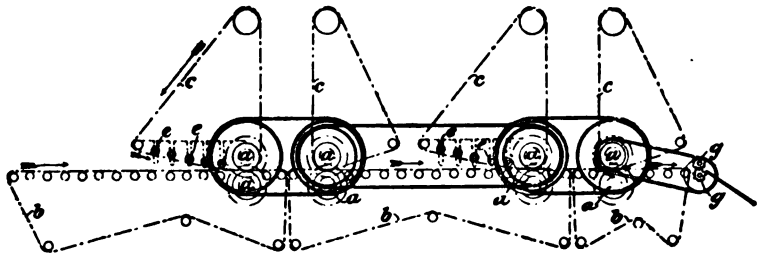

6174. Voith, F. April 27.

Pulping-engines.—The covers are made with a cross-piece A in the middle to deflect the stuff and prevent it from being carried round by the cylinder. To facilitate the expulsion of air from the cells between the knives, the knives are perforated, inclined, or elbowed, or the cylinder is made conical. Radial slats L are also provided on the front end of the cylinder for the admission and removal of air from the cells, and to prevent the stuff from passing out through the holes for the shaft in the cap.

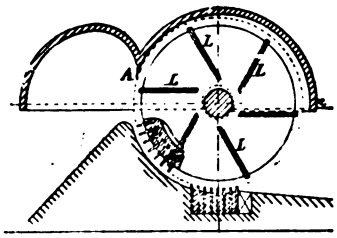

6563. Brown, R. May 4.

Dandy rolls for paper machines. A woven cover A is first put on the frame, and upon it is wound helically the "laid" wire C. Over this are secured, preferably by solder, longitudinal "line 'mark" wires D.

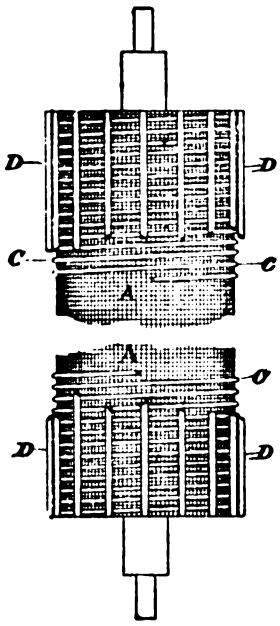

6709. Shepherd, G. May 7.

Drying.—Relates to drying-chambers for paper &c. The Figure shows a plan of the chamber. Air is supplied by a fan or blower driven by steam &c., and, passing along pipes A, is delivered into the chamber through vertical shafts B having apertures at intervals controlled by dampers. C, C are

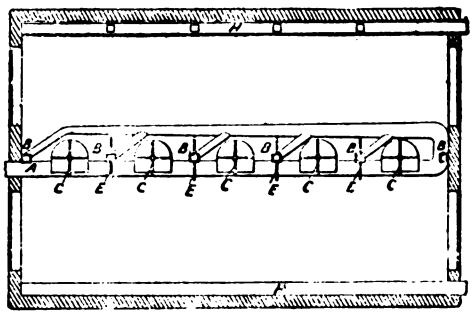

rotary agitators upon vertical shafts which terminate below in fans, the blades of which project into the main air-supply shaft and are rotated by the air current; E, E are partitions separating the agitators. To the walls of the chamber are attached exhaust shafts, similar to the air-delivery shafts, which open into the exhaust main H. A convenient form of damper consists of a flat plate mounted upon a central spindle, having at one end a bolt and at the other a spring.

Digitized by Google

6897. Hibbert, G. May 11.

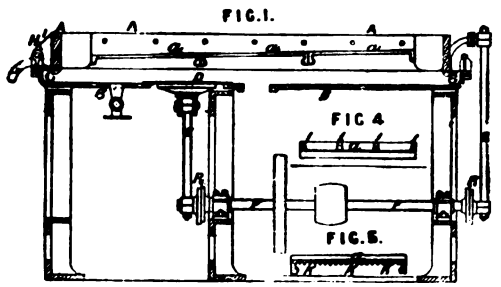

Strainers.—The frame A, Fig. 1, carrying the pulp strainer plates *a*, is connected at its sides to the vat B by a flexible diaphragm C. It is hinged at H^1 and jogged against stops by the rod E at the other end, which is operated by a crank or cam R on the shaft F. A flexible diaphragm D at the bottom of the vat is operated in the same manner. Figs. 4 and 5 are sections of the strainer plates, which have ribs I along the top so that the grooves K can be kept clean by scrapers acting on the lower side of the plates when the strainer is at work.

6945. Bird, G. May 12.

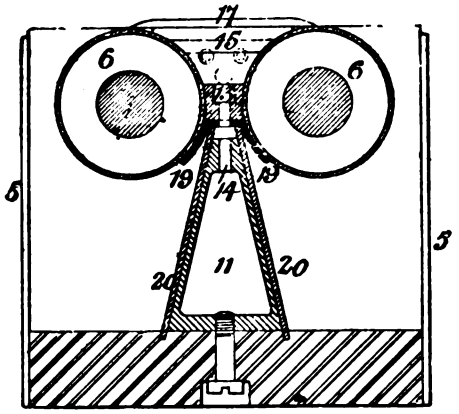

Paper machines, suction-boxes for. The wire-cloth rests upon two rollers 6, which are rotated at the surface speed of the wire-cloth itself. Between the rollers is a bottom piece 13, having slits 14 to connect the suction space with the passage 11 leading to the pump. Between the bottom piece and the casing a piece of rubber cloth 19 is secured by plates 20, the edges of the cloth bearing against the rollers. The ends of the suction space are closed by adjustable blocks 15, provided with rubber strips 17 to bear against the lower surface of the wire-cloth. The box 5 is filled with water to a level above the axes of the rollers in order to prevent leakage of air.

7090. Phoenix, T., and **Kirk, G.,** [Administrator of *Lamb, M. A.*]. May 14.

Transfer paper.—Relates to the production of sized transfer paper in the roll, so that it can be printed in a cylinder machine. After the pulp is bleached, the bleaching-agent, usually bleaching-powder, is neutralized or killed by the addition of sodium hyposulphite. The size, consisting of soft soap and soda, is then added, and the manufacture completed.

7113. Horne, J., and **Hollyman, S.** May 16. *Drawings to Specification.*

Drying.—Air is heated by any suitable means in a chamber, and is led by pipes or conduits to the drying-chamber. Fans, blowers, or punkahs are used for regulating the air supply. A special form of brick is employed, made in two halves with depressions &c. for mortar; the two halves when placed together form an inner passage for hot air, and an outer concentric passage for warm air. The hot and the warm air conduits are led into the drying-chamber, and there either hot or warm air can be used alone, or can be mixed in suitable proportions, and led into the room through valves &c.

7226. Menzies, R. C., and **King, C. M.** May 18.

Pulp, treating.—Paper for cheques and the like is prepared by adding to the neutral pulp in the beater successively phosphate of copper, ferrocyanide of zinc, and phosphate of manganese. Instead of the last a solution of sulphate or other soluble salt of manganese may be applied to the paper in the web. For the phosphates of copper and of manganese, any salts of those metals easily decomposable by weak acid or alkaline solutions may be substituted, and instead of the ferrocyanide of zinc any ferrocyanide insoluble in water may be used.

7550. Petrie, E. B., and **Wild, R.** May 25.

Bleaching.—For bleaching fibrous materials &c. in paper or other works, the materials, after being passed through cold or warm water, are passed through a cold or hot solution of a mixture prepared from the following materials:—Sub-borate of soda and soda-ash or potash, with or without soap, chloride, phosphate, and hyposulphite of sodium, and caustic soda or potash. They are then passed through a warm or boiling solution of a mixture prepared from soda, chloride of lime, and sub-borate of soda. They are then treated with a mixture of hydrochloric, sulphuric, and nitric acids, and finally with clear water.

Digitized by Google

7779. Hibbert, G. May 28.

Rag-engines.—A thin plate B of brass or other non-corrosive metal is fixed on one or both sides of the steel or iron knives A, in either a roll or disc engine, by screws, rivets, or other means.

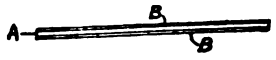

7884. Ducker, W. M. May 31.

Papier mâché.—Relates to sheathing for portable barracks, hospitals, and other buildings. Thin light sheets are made from a pulp composed of one half manilla, one quarter hemp, one-eighth jute, and one-eighth wood or straw. These sheets are submitted to hydraulic pressure, and may then be employed without further treatment, though preferably they should be painted. The proportions of the ingredients of the pulp may be varied slightly, and the fibres of the sunflower-stalk may be used in place of the hemp, and coco-nut fibre in place of jute. Further, to enable these sheets to be especially weatherproof, they may be covered with a mixture of one-third raw linseed oil, one-third Japan varnish, and one-third resin or tar, thinned with benzene or turpentine, and applied in the same manner as paint. They may also be painted with a fireproof composition, such as asbestos paint, in addition to the weatherproofing coat.

8160. Wood, J. June 7.

Paper machines.—The pulp on the endless wire is given a motion similar to that used in making hand-made paper. For this purpose two endless wires 3, 19 are used, and the frame 4 of the first is supported on four legs 5, fitting into cavities at top and bottom as shown, and receives a motion in a horizontal plane from eccentrics or cranks on the vertical shafts 8. A felt-covered roller 18 presses on the web near the delivery end of the first wire to cause it to leave it more easily.

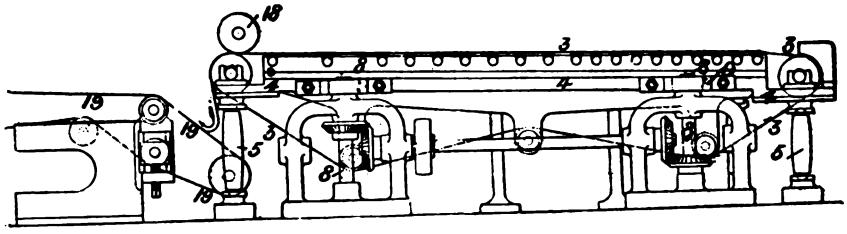

8391. Craig, J., [*Hanbold, C. H.*]. June 10.

Materials, fibrous, for paper for calendering-bowls. The paper is made of wool, woollen rags, or other woollen materials, with or without cotton, linen, hemp, or other fibres.

8399. Bowery, W. June 11.

Paper machines for making ivory and card boards, and other paper. In order to allow the air, water, &c. to pass off freely and the paste or other adhesive material to be uniformly distributed, the cylinder is made with internal ribs *g* as shown. These ribs have holes *j* drilled longitudinally through them, and other holes *n* are drilled into the holes *j* from the outside of the cylinder. The same object may be accomplished by means of a grooved wooden roll inside the cylinder.

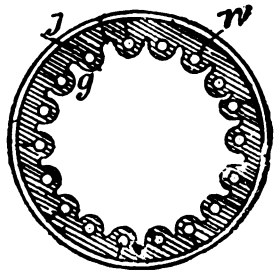

8591. Wood, R. June 15.

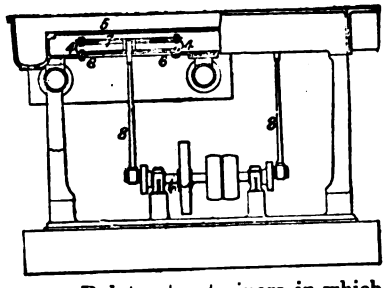

Strainers.—Relates to strainers in which a pulsating action is imparted to the pulp to draw it through the strainer plates, and consists in means for producing the pulsation. Beneath the stationary strainer plate 5 are discs 7, which are connected to the edges of the orifices 6 by rubber bands 4 in the manner shown, and which are reciprocated vertically by connecting-rods 8 and cranks on the shaft 9.

8782. Wood, J., and **Wood, R.** June 18.

Strainers.—Rotary strainers 4 are made with three sides only, and are preferably rotated by

Digitized by Google

spur-wheels 13, 14 of varying radius from worm gearing 16, 17. The trunnion 6, through which the air works for giving a pulsating action to the pulp, has a rubber bag 18 connected to it which

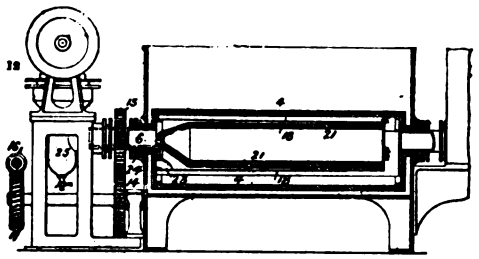

contains a box 21 for diminishing its capacity. Inside this bag is a small scoop 23 for discharging any water, which leaks into the bag, through the pipe 24 in the trunnion 6 into the vessel 25 beneath the air-pump 12.

8817. Simpson, H. J., Mackirdy, G. de M., and Taylor, A. June 18.

Materials, fibrous; raw materials, treating; papier mâché.—Cellulose or wood pulp for paper-making and various other purposes is made from the bark and wood of the Californian "Redwood" tree (*Sequoia sempervirens*). The rough outer bark is applicable for making coarse pulp for brown paper, felt for non-conducting coverings, &c. and the main bark is applicable for making other kinds of paper and for vases, hats, railway wheels, and other articles requiring long-fibred material. Beneath the outer bark is a fine bast fibre of great length, which may be used as a textile material. In making cellulose from the main bark and wood, the outer bark and the bast fibre are removed by suitable mechanical or chemical means. The remainder is steeped in hot water and then treated with a caustic alkali. The liquor is removed, and the material treated with dilute sulphuric or hydrochloric acid, after which it may be treated by the ordinary methods. The outer bark, the bast fibre, or the whole bark may be treated wholly or partially by this process. For making felt, the acid treatment is dispensed with, and the material is again treated with alkali, to which is added sulphate of alumina &c. After this it may be passed through a mashing-machine, and it may also be mixed with hair or other fibres.

8861. Mallary, G. H. June 20.

Boiling.—The boiler, containing caustic soda or a lye of suitable strength, is charged with the esparto or other fibrous material and magnesite or carbonate of magnesia, or sulphite of magnesia. To this is added a saponaceous compound, consisting of caustic soda, petroleum or its products, mustard oil, and boracic acid. When the boiling is completed, the material may be treated as ordinary stock.

8862. Mallary, G. H. June 20.

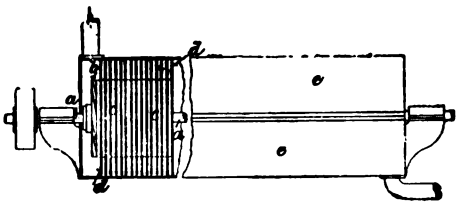

Pulping-engines.—The material is forced through the cylinder *e*, which contains a shaft *a* carrying serrated disintegrating-discs *d* and distance-pieces *c*, by means of blades on the disc *b*.

8969. Gardner, H., [*Stevens, S. S.*]. June 23.

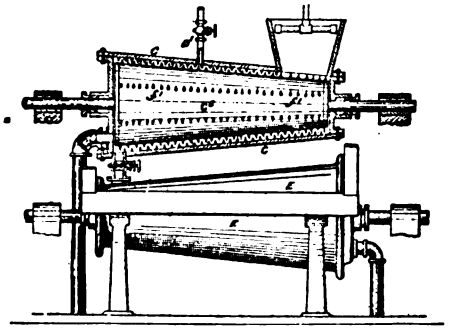

Boiling; pulping-engines.—The stock is passed into a devil C with a hot alkaline solution. Steam is admitted either directly through a pipe D^1, as shown, or it is first introduced through the hollow shaft to the cone C^6, whence it passes through the teeth f^1 or through perforations in the cone to the annular space between it and the casing. After leaving the devil the stock may also be passed through a "Jordan engine" E, whence it is discharged directly into the washer.

9211. Crompton, R. June 28.

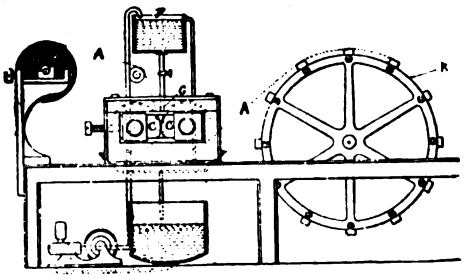

Colouring web; drying.—Relates to apparatus for colouring and drying tissue, tracing, waterproof, cheque, and other thin papers. The paper A, after manufacture or in the paper-making machine,

Digitized by Google

is led vertically without support between rollers C, and the colour is supplied by a perforated pipe G from a tank F or by smaller rollers rotating in the colour. Two sets of rollers &c. may be used for mordanting and dyeing with a drying-cylinder between them, or the apparatus may be combined with drying-apparatus, consisting of air drums with fans and steam cylinders with drying-felts.

9817. Imray, O., [*Simmons, W. A.*]. July 12.

Embossed paper for covering walls or floors or for packing fragile articles and like purposes is made of a mixture of wood and straw pulp.

10,105. Simonds, A. A. July 19.

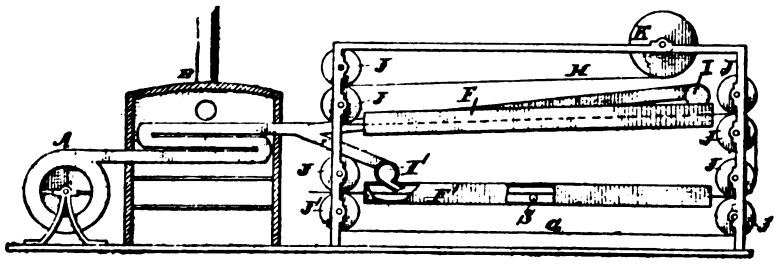

Drying.—Writing and other papers are dried by directing hot air currents upon them in narrow boxes F, F¹. These boxes are open at one end and have a narrow slit at the other for the passage of the paper H, which is supported at first by an endless felt G on the rollers J¹, and then passes over other rollers J to the reel K. Smaller intermediate rollers S may also be provided if necessary. The air is forced by the blower A through the furnace B, and is directed against one or both surfaces of the paper by pipes I, I¹.

10,375. Ashworth, W. J. July 26.

Pulping-engines.—The bars *a* of the cylinder and the bars *b* of the bed-plate are made with two or more cutting-edges. Either set may be used in combination with the ordinary single-edge bars.

10,879. Thame, J. R. Aug. 8.

Papier mâché.—Relates to the manufacture of paper casks or tubes. The pulp, in forming the body of the barrel &c., is fed along a felt band *d*, Fig. 1, driven by an under roller *c*, and is taken up a hollow forming-roller *a* of gauze &c., through the perforations *z* of which the moisture of the pulp passes to the interior, which is in connection with a suction pump, as shown. The barrel bottom is formed in a receptacle *i* surrounded by a perforated former *k*, and a flexible diaphragm *o*. Into this pulp is passed through pipes *j* provided with valves *j*¹

FIG. 1.

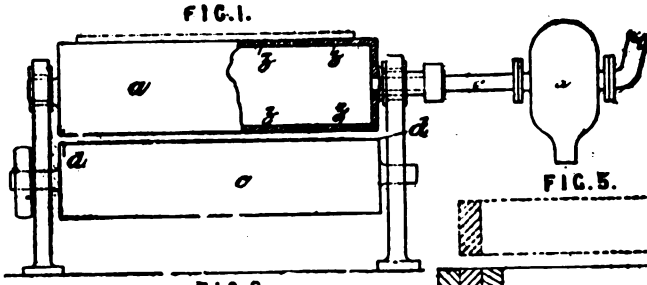

FIG. 2.

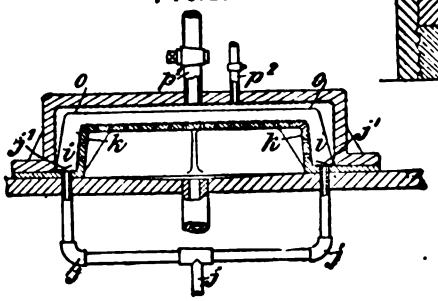

FIG. 3.

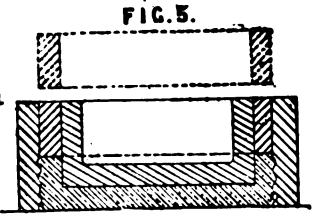

Digitized by Google

The moisture is pressed through the perforated former by water &c. forced through pipes p^1, p^2 on to the diaphragm. The barrel &c. is finally waterproofed, and in some cases a fireproof admixture is added to the pulp.

11,610. Warren, J. E., and **Cloudman, F. A.** Aug. 26.

Waste products, treatment of.—Relates to apparatus and furnaces for recovering chemicals from the spent liquor of pulp digesters. The combustion furnace A^2 has a hollow throat a^2 projecting into the rotary calcining-furnace A. The liquor passes through this throat from the tank B, and thence to a series of trays arranged in the evaporating-chamber A^1, which is provided with a series of screw conveyers c^1. It then passes to the calcining-furnace A which is provided with a loose screw *a* or other agitating-device.

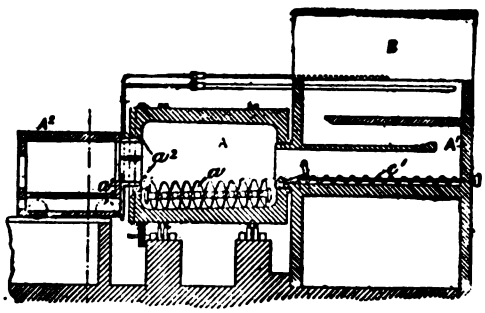

11,735. Baldwin, J. Aug. 30.

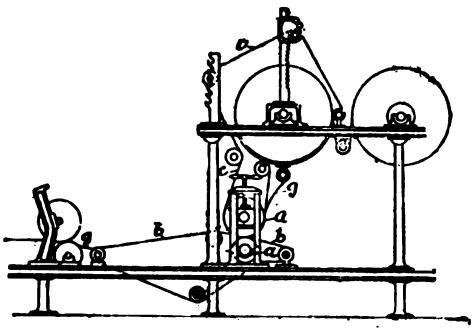

Paper machines.—Two endless felts *b*, *c* are employed at the first press *a*, one passing around each roll, and the web *g* passes between the felts.

11,812. Smith, J., and **Nicolle, P. W.** Aug. 31.

Bleaching.—Relates to a process for bleaching cotton, flax, jute, rhea, esparto, and similar fibrous substances, before or after manufacture into paper &c., or at any stage in the manufacture, and consists in employing instead of caustic soda, lime, or other caustic alkalies, sulphate of soda or its crude form, salt cake, or potassium, ammonium, or other alkaline sulphates, singly or mixed. After steeping in the sulphate solution, the material is washed with water, and then steeped in chloride of lime or its equivalent, and sulphuric or other acid, successively. In the Provisional Specification, the use of rollers for bringing the material quickly into contact with the solutions or washing-water employed is described.

12,003. Alsing, J. R. Sept. 5.

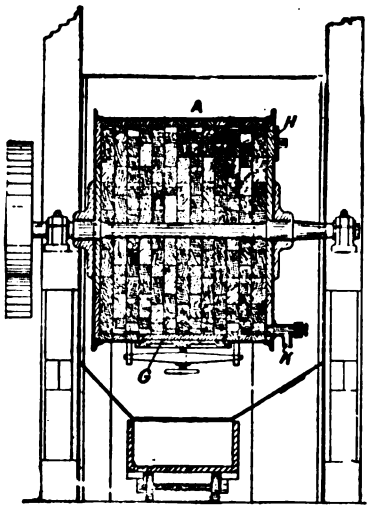

Pulping-engines.—The sawdust, straw, or vegetable substance to be treated is charged through the doorways G and H into the wood-lined rotating cylinder A, where it is reduced by the action of flints, pebbles, &c. contained therein. When fine enough it is, in the case of dry grinding, discharged through a grating which replaces the door G, or, in the case of wet grinding, by a valve K or by removing a plug.

12,105. Gourlay, J. Sept. 7.

Strainers.—The vat is provided with a divided water-chest A along one side and a sluice E along the other, and the plates P are cleansed at intervals by a flow of water over the top and bottom admitted

Digitized by Google

through the self-closing valve C by levers and connections from the hand-lever J. The same motion of the lever J opens the sluice E and waste pulp valve G, the dirt or refuse being washed into a trough provided for the purpose.

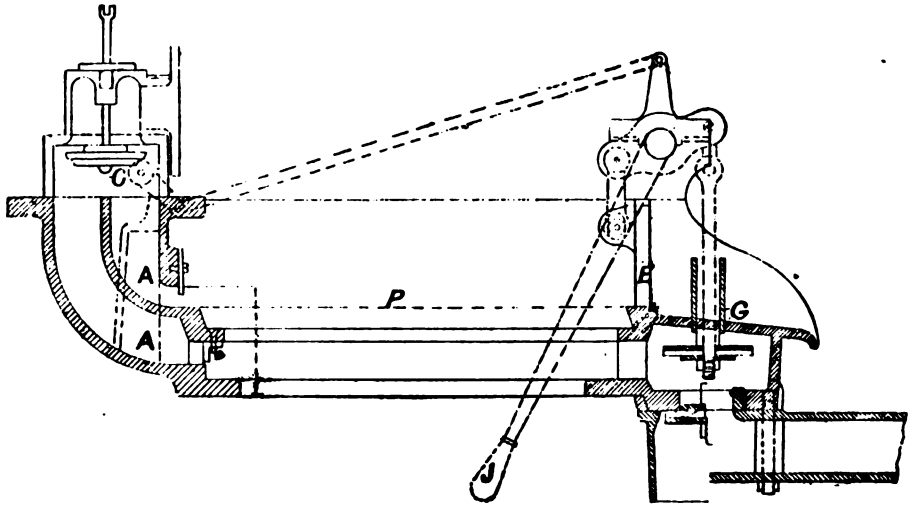

12,374. Brailsford, J. Sept. 13.

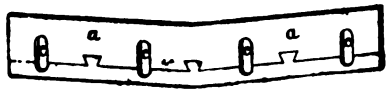

Rag-engines.—The dividers *a*, used in the bottom and elbow plates, are slotted at *c* to allow adjustment on the securing-bolts, and may be formed in two or more parts, as shown.

12,417. Smith, R. Sept. 13.

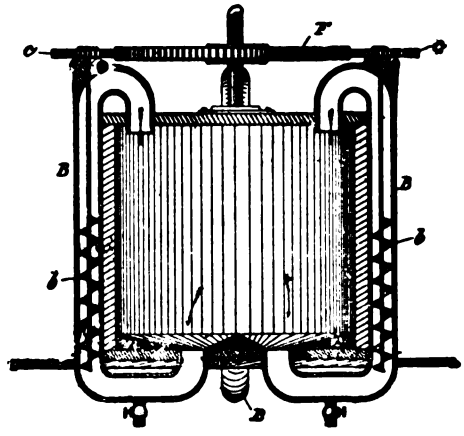

Stuff-chests.—The "stuff" is mixed by withdrawing it from the bottom of the chest and delivering it again at the top. This is done by means of pipes B, as shown, in which helical blades *b* are rotated by the pinions *c* from the spur-wheel F.

12,430. Lake, H. H., [*Cheney, P. C.*]. Sept. 13.

Papier mâché.—Relates to a process of indurating and waterproofing pails and other hollow vessels, or other articles made of wood pulp and other analogous fibrous material. The pulp articles are immersed in a mixture of cotton-seed oil and resin at a temperature of 300° F. until thoroughly saturated, and afterwards are allowed to stand. The soaked articles are then baked in an oven at a temperature of 100°, the temperature afterwards being raised to 250°, and the baking continued until there is no odour or gas perceptible. A glaze is afterwards put on the articles by immersing them in a previously-boiled mixture of cotton-seed oil, resin, and litharge, and baking them at a temperature of 250° F. The glazing operation may be repeated if required.

12,534. Ducker, W. M. Sept. 15. *Drawings to Specification. Amended.*

Paper boards.—Relates to sheathing for buildings &c. Fibrous materials, such as manilla, hemp, jute, wood, straw, coco-nut fibre, sunflower stalks, &c. are worked into a pulp by disintegration and soaking or boiling. The pulp is formed into sheets of the required thickness, which are consolidated by hydraulic pressure. They are finally coated with paint or other preservative compositions.

Digitized by Google

12,762. Pesler, P. E. Sept. 20.

Raw materials, treating; boiling; waste products, treatment and utilization of.—Vegetable materials are first steeped in a strong solution of caustic alkali until they are saturated. They are then passed successively through a series of open vessels, containing solutions of caustic alkali of gradually diminishing strength, for the purpose of separating the combined products both from the material itself and from the impregnating-liquid, and of recovering the greatest possible quantity of the latter. The requisite strength of the solutions is maintained by transferring a definite quantity from one vessel to the next above it in the series, that from the first being transferred to an additional vessel, where it is made of the requisite strength for the saturating process. The materials are then boiled in water to remove all the combined or uncombined matters, or the salts carried over from the last vessel, and may afterwards be washed, bleached, or treated in any ordinary manner. The lye residues are deposited at the bottom of the saturating-vessel and may be saponified, or sold to soapmakers, and the organic matters in the waste liquor from the boiling operation may be precipitated by hydrochloric acid and utilized in the manufacture of manure. The alkali may also be recovered by incineration.

12,903. Wright, A. Sept. 23.

Materials, fibrous; raw materials, treating; boiling; bleaching; sand traps.—The pulp is made from straw, hay, heather, or grass, which has been used for litter. The materials are first crushed with rollers or the like, and are then boiled in a solution of caustic soda and afterwards in water alone. After being washed in the engine, the pulp is bleached with ordinary bleaching-liquor, to which is added, after an interval, carbonate of soda. The pulp is again washed, and is then passed through the beaters &c. as usual. The sand-traps are made at least 7 inches deep. The proportions of caustic soda, bleaching-liquor, &c. which are preferred for treating straw or hay, are given.

13,004. Thompson, W. P., [*Wolf, S.*]. Sept. 26.

Boiling; waste products, utilization of.—Consists essentially in employing, in the manufacture of sulphate cellulose, acid sodium sulphate, or free sulphuric acid along with neutral sodium sulphate instead of the neutral sodium sulphate alone as hitherto used. The acid sulphate is added to the brown liquor or calcareous mud resulting as a bye-product from a former process, whereby the organic sodium compounds present are transformed into neutral sulphate and free organic acids. The product obtained is evaporated and calcined, whereby the sulphate is converted into sulphide, and sodium carbonate also formed. This product is used in another process of cellulose manufacture. The acid sulphate may be added to the lye before the ordinary boiling operation. If too acid, the acid sulphate may be neutralized or partially neutralized by the residual calcareous mud obtained in the cellulose manufacture, whereby carbonic acid is evolved, and calcium sulphate and neutral sodium sulphate are produced. The neutral sodium sulphate may then be added to one part of the brown liquor and the acid sulphate to another. Instead of sulphate, other sulphur acids and salts may be employed, such as sulphurous acid or acid sulphites. The Provisional Specification describes a method of neutralizing acid sodium sulphate with calcareous mud, whereby carbonic acid is evolved, and a solution of neutral sodium sulphate, which is then employed in the cellulose manufacture in the usual way, or for any other purpose, while calcium sulphate, useful as a manure, is precipitated. Or quicklime or other basic or alkaline substances may be employed to neutralize the acid sulphate.

13,255. Warhurst, A. B. Sept. 30.

Pulp, treating.—Paper for toilet and other purposes is treated in the pulp with medicinal, antiseptic, or other substances which emit an odour or act as a disinfectant when brought into contact with water. The substances preferably used are tinctures of hamamelis, gall, and opium, and eucalyptus and pine oils with or without the addition of turpentine, mixed with and dissolved in methylated or rectified spirit, finish, or other spirituous liquid.

13,502. Gibson, T. B. Oct. 5.

Papier mâché, ornamenting articles made of. Relates to jars or other vessels or articles of any desired form, preferably cylindrical or conoidal, and made of papier mâché previously decorated or not. Over the article is drawn a piece of open or transparent woven material, which is approximately the same shape, and which is then secured thereto. The woven or knitted material (which may be of cotton, wool, or silk, or of a mixture) may have a pattern or design woven therein, or painted thereon, or be otherwise decorated, and may finally be protected by a coating of a hard transparent quick-setting varnish. Lids, also having a woven fabric covering, may be applied to the jars &c.

14,003. Hess, S., and **Hess, F. S.** Oct. 15.

Paper boards for stiffening hats &c. Paper boards of any kind are faced with felt paper, the back being covered with any coloured paper.

15,333. Rogers, H. J. Nov. 10.

Strainers.—In strainers of the class described in Specification No. 4073, A.D. 1887, the diaphragm is vibrated by two sets of electromagnets, the rocking bar there described being dispensed with. The

Digitized by Google

vibrations may be regulated by moving longitudinally the frame carrying the electromagnets by means of a screw. In the case of a mechanically-operated diaphragm, the position of the connecting-rod may be adjusted for the same purpose. The

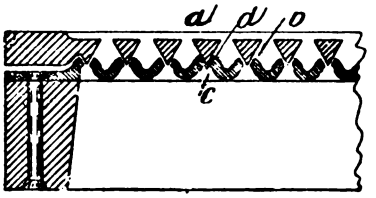

strainer plate is made in two parts *a*, *c*, the ribs *b* of the upper fitting into the slots of the lower, as shown. The two parts may be held together by screws, the gauge of the slits being adjusted by metal strips *d*. Their relative position may be automatically regulated by an electromagnet, placed above the upper part, and connected to the source of electrical supply. In the circuit is placed a resistance coil, so that, when the slits are stopped up and a greater current is required to vibrate the diaphragm, the upper part is lifted by the electromagnet. When the slits are cleared, it returns by gravity to its original position. The upper plate *a* and strip *d* can be applied to worn strainer plates of the ordinary type, if their slits are enlarged.

15,350. Ashworth, M., and Wild, R. Nov. 10.

Raw materials, treating; boiling; bleaching.—Consists, firstly, in a mixture for washing, scouring, and boiling fibres, fibrous materials, &c. The mixture is composed of biborate of soda, phosphate of soda, potassium chlorate, phosphate of lime, soda ash or potash, and sulphate of magnesium, with or without caustic soda or caustic potash, crushed and ground to powder and intimately mixed. Secondly, in a mixture for bleaching fibres, fibrous materials, &c.; this mixture is composed of biborate of soda, phosphate of soda, potassium chlorate, chloride of sodium, and carbonate of soda. The process of washing, scouring, and boiling consists in treating the materials with a cold, warm, or hot solution of the first mixture, passing them through press bowls or the like, washing them in clean water, and again pressing. The materials are afterwards treated in bleaching-tanks with a solution of the second mixture, washed, pressed, passed through acid solution, pressed, again washed, blued, pressed, and finally dried.

15,543. Jeffers, W. W. D. Nov. 14.

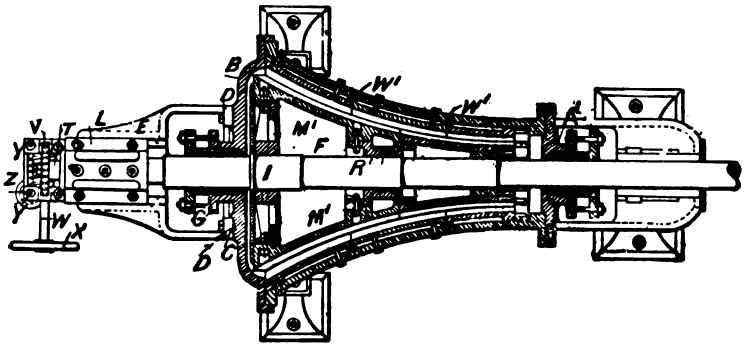

Pulping-engines.—The shaft I, carrying a grinder F of the form shown, passes through stuffing-boxes A^1, G and has a number of grooves at the end engaging with ribs in a sliding box L. The head B has an annular groove C engaging with the flange D of the semi-tubular extension E. The box L is operated by a screw T, which is connected by worm gearing V, W with the hand-wheel X. The shaft W passes through a divided box T, and may be clamped by a screw Z. The grinder and the shell are made in sections, those of the former being secured to the arms M^1 and hub R^1, and of the latter to annular seats W^1.

15,761. Meinert, B. Nov. 17.

Webs, guiding.—Relates to a method of and apparatus for automatically guiding travelling webs, paper, pasteboard, &c. Both ends of the guide-roller shaft *z* can slide in swivel bearings, one of which is carried by a sliding shoe G on the bed F. The shaft *z* has an eccentric *e*, which moves vertically a fork *a* carrying pawls *k*, *l* to engage one with each side of a ratchet-wheel, working on a screw J between brackets *m* on the shoe G. If the roller W moves axially, the ratchet-wheel is operated by means of the grooved boss *i*, bell-crank lever Q, and sliding sleeve C, which carries springs *b* to operate the pawls *k*, *l*. The adjustment of the guiding-roller may also be effected by the movement of an auxiliary roller.

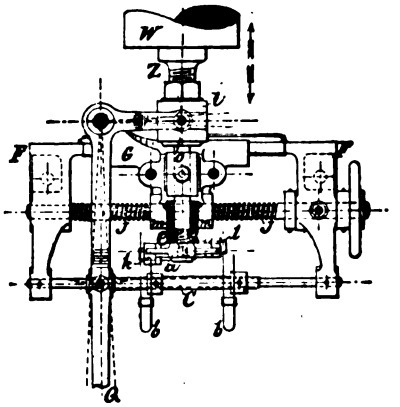

Digitized by Google

16,154. Cumming, J. G. Nov. 24.

Calendering.—Relates to machines for feeding sheets of paper, applicable among other uses to calendering-apparatus. The pile of papers C is placed upon a table B raised by means of levers B^1, B^1 connected by links, and a weight B^2. The papers are fed forward by a scraper D, which moves over the surface of a guard consisting of a strip of fabric lying on the top sheet. The point of the scraper is pressed on to the guard by a magnet E. The scraper and magnet are reciprocated by the rods K and crank K^1 on the shaft K^2. A wire from the pole C of a battery J is connected to the magnet. The wire from the other pole is connected to a plate on which the contact F rests, and a wire connects the contact F to one part of a contact-breaker F^1, the other part of which is connected by a wire to the magnet E. The contact-breaker F^1 is operated to make and break the circuit at each end of the stroke of the scraper by cams G. When the front edge of the sheet moves between the contact F and its metal plate, the circuit is broken, and the scraper raised off the guard. Grippers mounted upon a rod L^1 carry the sheet on to receiving-tapes &c. The gripper carrier L^1 is moved backward and forward by rods M, M and a crank. The rod L^1 in moving backward engages a rod P connected by a link to an arm on the pivot P^2 of the contact F, so that the latter is moved down out of the way of the sheet.

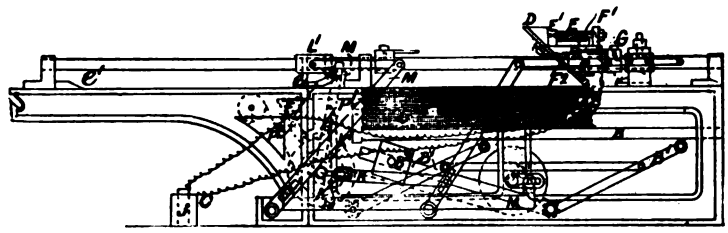

A.D. 1888.

427. Griffiths, G. Jan. 10.

Pulping-engines,—Relates to beating, breaking, and washing engines for rags, wood, and other fibre. The vat has one or two midfeathers, and an overthrow roll is contained in a casing at one end. The liquid is guided underneath the roll and, passing over it, is delivered over a back-fall into the vat. The roll *d* carries mortised rings *m*, having feathers *n* to engage with notches *o* in the knives *p*, which are spaced by wooden bars *s*. The bottom plate is formed in a similar manner, the knives being preferably elbowed and inserted without spacing-bars. The bearing blocks of the roll can slide in fixed pedestals, and are adjusted by levers and worm and screw gearing.

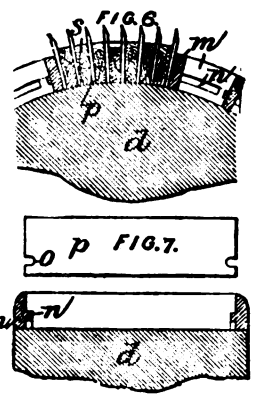

585. Hoeborn, H. Jan. 13.

Paper machines.—The sieve mechanism or wire-cloth A, and the first drying-cylinder H, are driven by an upper cloth, which passes over the upper couch roll B and the upper cylinder of the wet press G, and receives motion from the latter. The upper cloth passing from the coucher, with the paper adhering thereto, is led over guide-rolls E, F, over which the under cloth also passes as shown.

(*For Drawing see next page.*)

Digitized by Google

585.

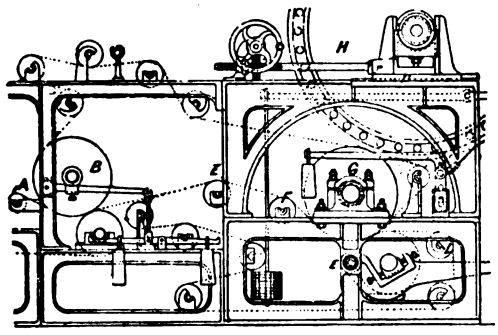

807. **Hacking, J.**, and **Hacking, J. W.** Jan. 18.

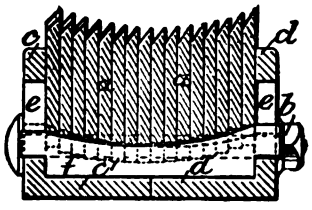

Rag-engines.—The cutter-bars *a* are made of the same width, and preferably without bolt-holes, in which case they are either plain or formed with short slots at the bottom. They rest upon curved cross-bearers *f*, which are higher at one side than the other, and fit into slots *e* in the clamping-plates *c*, *d*. These plates are held together by bolts *b*, and are placed obliquely under the engine roll. When the edges of the bars are worn, they are re-bevelled and used with higher cross-bearers. In some cases both edges of each bar are bevelled. When square bars and distance-pieces are used, the latter are formed with ribs or flanges at the bottom in place of the flanges c^1, d^1 on the clamping-plates.

1146. **Hawke, F.**, and **Ford, C. J.** Jan. 25.

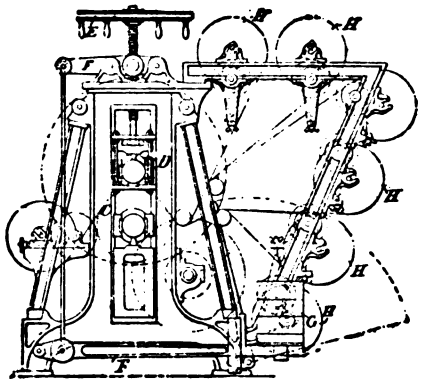

Watermarking.—The paper is passed from reels H between an engraved roller D, preferably of steel, and a plain roller C, preferably of chilled iron. Cloth may be lapped around either roller, or an endless felt passed between either and the material to be treated. The pressure is applied by screws E, or by compound levers F and weight G. When the pressure is required to be great, a third roller may be used above the engraved roller to prevent it from springing in the middle. When several webs are passed between the rollers at the same time, the embossed appearance may be removed by passing them through calender rolls. The pressure rolls are placed after the last drying-cylinder used in paper manufacture.

1738. **Pearce, A. B.** Feb. 6.

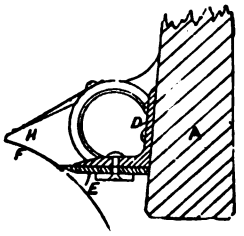

Paper machines.—Relates to guards for the couch rolls of paper machines. The body of the guard A is made of wood &c., and is mounted by means of plates at the ends on hollow trunnions so that it may have a slight rocking motion. An angle plate D, fixed to the body A, carries a blade E of wood &c. which is pressed against the roll F by weighted levers on the trunnions. At the ends are blocks of india-rubber H. The water pressed out of the felt jacket of the roll flows over the blade and angle plate and through the hollow trunnions.

2046. **Newton, P. A.**, [*Steimmig, R.*]. Feb. 10.

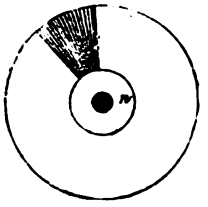

Wood, cutting and grinding for production of fibre. The wood is reduced by projecting flat wires or comb-shaped cutting-pieces fixed on the sides and peripheries of rotating discs or cylinders or on reciprocating flat surfaces. The Figure shows a method of fixing wires on the side of a disc; they are arranged between the periphery and the nave *n*, to which they may be fixed by dovetail-shaped pins or wedges catching into corre-ponding recesses of the plate or disc. The disc may be made of wood, metal, or other suitable material. The wires, which must be elastic or "springing," may be rectangular, or of lens or other shape in section.

2106. **Killin, W.**, and **Masson, J. B.** Feb. 11.

Paper machines.—The web after leaving the wire is inverted, so that the wire-marked side comes in

Digitized by Google

contact with the naked surface of one of the first press rolls. This is done by an additional felt D, from which the web E is transferred to the felt G

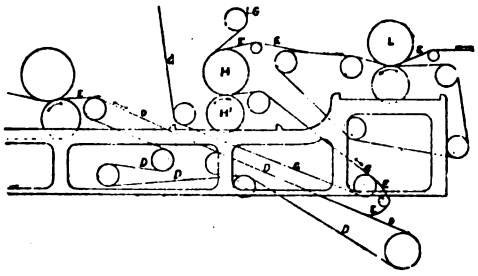

passing between the first press rolls H, H¹. The other side of the web comes in contact with the roll L of the second press.

2134. Urquhart, W. W., Lindsay, J., and **Allan, R.** Feb. 13.

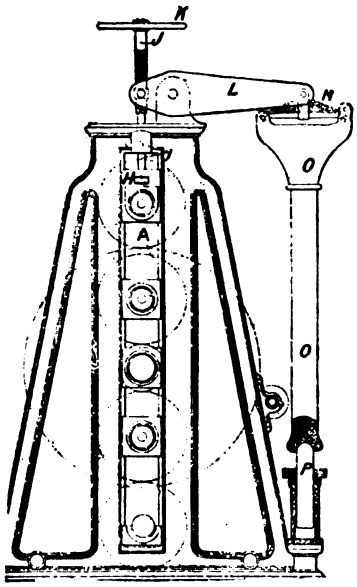

Calendering.—In machines for calendering paper &c., the bearing block H of the top roller A is raised or lowered by the spindle J and hand-wheel K. The spindle J is screwed through a block at one end of the lever L, and the other end of the lever is connected by a spring N to a heavy bar O, which forms a counterweight for the roller A and fits upon the end of the hydraulic ram P. Pressure may, however, be applied in any other convenient way.

2208. Scott, J. Feb. 14.

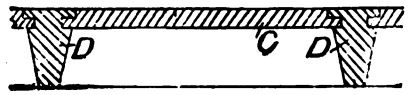

Strainers.—To facilitate repairing and renewal of parts the strainer plates are made in sections C, which slide in grooves in transverse bars D and are held in position by screws &c.

2842. Johnson, J. Y., [*Fabre, E.,* and *Tronche, A.*]. Feb. 25. *Drawings to Specification.*

Wood, grinding.—Tools for rasping or grinding wood for making paper pulp &c. are formed with "inclined micro tubular perforations" to prevent glazing. They may be formed of various abrading and binding agents, such as corundum, emery, silicate of magnesium, chloride of zinc, and metallic cements. After having been moulded to the required shape, they may be hardened by baking or by compression and drying.

4704. Bruce, W. P. March 27.

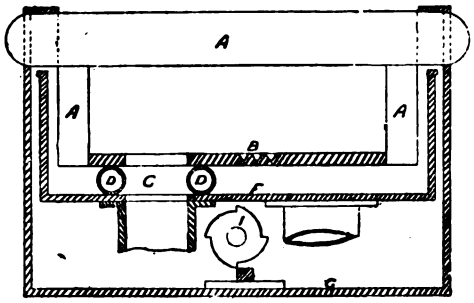

Strainers.—The strainer plate B is inverted, the pulp passing upwards from the vat F. The strained pulp passes through the passage C, which is formed by a rubber ring D, as shown, or by a flexible or sliding pipe connecting an aperture in the plate B with an aperture in the bottom of the vat F. The upward motion of the pulp, by keeping the strap G of the frame A, which carries the plate B, in contact with the rotating cam I, gives the necessary jogging motion to the strainer.

4768. Hawke, J. March 28.

Blotting-paper.—The pulp from which blotting-paper is made is impregnated with proto-salts or per-salts of iron, or of mixtures of the same (or salts of sodium) in solution or water impregnated with oxide of iron resulting from the decomposition of salts of iron.

Digitized by Google

4931. Turnbull, J. April 3.

Boiling. — The liquid is circulated by a pump A which draws it off from below the false bottom c^3 and distributes it through the pipe B^1. The material to be treated may be contained in a removable open cage or basket D.

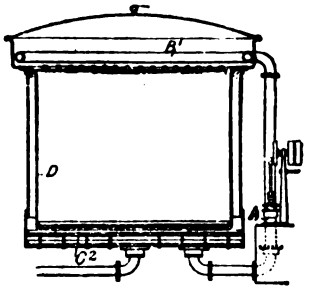

5384. Birchall, C. F. B., Wood, A., and Budd, J. April 11.

Papier mâché, ornamenting. Designs are transferred from a lithographic stone, engraved plate, or wood block by means of a roller covered with printers' composition to papier mâché and other surfaces. The whole may then be coloured by hand or machinery, and the design is covered by means of a sprayer with a transparent coating of white shellac, naphtha, white varnish, and methylated spirit.

5453. Brin's Oxygen Co., [*Brin, L. Q.*]. April 12.

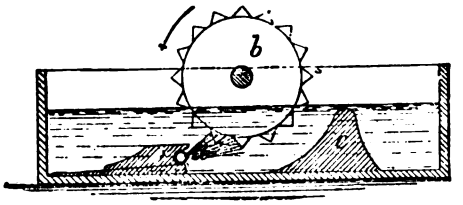

Bleaching. — Consists in the combined use of either oxygen or air, or both, and of bleaching-powder (or other chlorinated bleaching-salt) or chlorine, or both, the whole being subjected to agitation in a vessel provided with agitating-appliances. The Figure shows apparatus suitable for use in bleaching paper pulp. Oxygen or air is supplied by the perforated pipe *d*, and the liquid is circulated by means of the roller *b* and obstacle *c*.

6070. Schott, G. A. J., [*Lortzing, C.*]. April 24. *Drawings to Specification.*

Materials, fibrous.—Sewage scum, obtained in a special process of purifying sewage water, is treated with naphtha or carbon bisulphide to recover fibrous matters therefrom for use in the manufacture of paper.

6796. Armstrong, H. G., and **Waller, J. E.** May 7.

Toilet paper.—Relates to sanitary advertising paper. The paper is treated during manufacture with disinfecting or medicated material or substance, such as a decoction of galls and opium, or either of them.

7350. Brasier, E. May 17.

Materials, fibrous; compound paper; papier mâché. —Relates to the treatment of *Bauhinia Vahlii* and other like fibrous materials. The materials are first treated by suitable breaking and decorticating machinery, such as is described in Specification No. 6679, A.D. 1888, and then reduced to pulp as in the process of paper-making. The pulp is made into continuous sheets by ordinary paper-making machines, and wound upon rollers, which are then mounted in a frame. Sheets drawn from the rollers are laid together to make a compound sheet of the required thickness, which may be passed through a fireproof and waterproof solution and dried. Sheets of wire gauze may be placed between the layers to make the fibrous slabs suitable for partitions of railway carriages &c., for doors, floors, ceilings, colonial houses, and other structural purposes, and for organ and other pipes &c. The pulp may be formed into slabs or blocks by means of a frame with a wire-gauze or perforated bottom, which is dipped into the tank, raised, and drained. The pulp is then placed in suitable moulds and subjected to pressure to form plain or ornamental panels, blocks, or slabs.

7854. Thompson, W. P., [*Matcovich, P.*, and *Grossich, A.*]. May 29.

Antiseptic paper.—"Aseptic" paper is prepared from a mixture of linen and cotton which is reduced to pulp, washed with a solution of sodium and potassium hydrates and with hot water, treated with chlorine water, washed successively with water and alcohol, then treated with phenic acid, and, lastly, compressed by centrifugal power and passed between heated rollers. The antiseptic paper is prepared by dipping the aseptic paper in an antiseptic solution containing iodoform, salol, phenic acid, &c., to which glycerine or vaseline may be added.

8059. Lake, H. H., [*Manning, J. A., Peckham, W. M.*, and *Chambers, A.*]. June 1.

Boiling.—The boiler or digester A is provided with an auxiliary reservoir B, which is connected to it by pressure-equalizing tubes R, provided with check valves to resist downward pressure. The digester and reservoir B are also connected externally by pipes &c. as shown. The cooking-liquor is admitted through the pipes F, H by the pump E, and steam is introduced through the pipes J. When the liquor is heated to boiling

Digitized by Google

point it is continually pumped through the pipes G, F to the reservoir B, until the pressure opens the spring or weight-controlled valve Q^1, and the liquor returns through the pipe Q^2 to the digester A. By suitably arranging the valves, the liquor

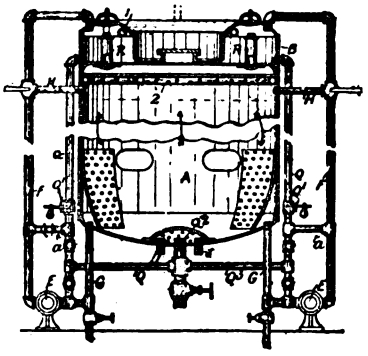

may be returned by the pump E, or by the pressure of steam in the reservoir B, or the liquor may be circulated through the pipes G, F, *a*, Q, Q^3, Q^2, in which case the reservoir B may be dispensed with. An air space is left at the top of the digester A, and perforated circular blow-off pipes 1, 2 are provided in both vessels, and are connected to a closed condensing-vessel for recovering the cooking-liquors.

8161. Andreoli, E. H. M. June 4.

Bleaching.—Sodium hypochlorite for bleaching paper pulp is produced in the bleaching-tanks, by the electrolytic decomposition of a sodium-chloride solution. The electrodes are formed by casting chloride or other salt of lead, either alone or with other metallic salts, and converting the plates thus made into spongy metal, which may then be peroxidized. The lead chloride or other salt may be applied as a paste to a perforated sheet of lead, which is afterwards folded upon it. The plates may also be formed of peroxides of lead and manganese prepared chemically. The fused salts may be applied to a perforated sheet or network of lead, which has been previously coated with a salt, having a higher fusing-point, or with zinc, or broken pieces of peroxide of lead and manganese may be placed between two grids of lead previously peroxidized. The electrodes may be formed also of vegetable charcoal. An alternating-current dynamo is preferably used as a source of electricity, and the bleaching-tanks are arranged in series, the liquor passing from one to the other.

8371. Edwards, W. June 7.

Waste products, treatment of.—Consists of an arrangement of plant for filtering polluted and waste waters from manufactories, such as paper mills, and recovering expensive materials contained therein. The plant consists of one or more tanks divided into a number of compartments *a*, each of which communicates by a passage *c* closable by a door *d* with a sub-compartment *b* which communicates with other similar sub-compartments, or with a main sub-compartment. On a perforated false

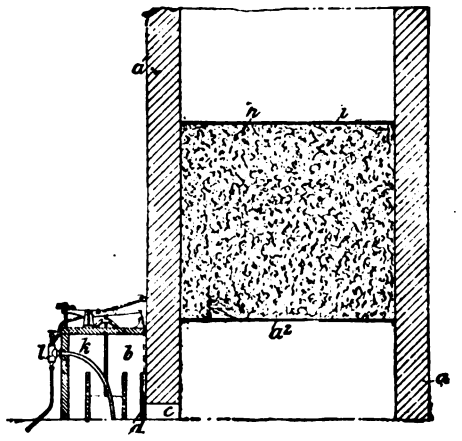

bottom a^2 in each compartment *a* rests the filtering-medium *h*, which is covered by closely-woven coco-nut matting *i*. The filtering-medium consists of all or any of the following :—Coke, river sand, pit sand, peat or moss litter. A siphon *k*, which, if necessary, is combined with a steam ejector *l*, serves to withdraw the purified water from each sub-compartment *b*. The polluted water is run in at the top of the tank, and the purified effluent may be run into watercourses, or used as desired.

8730. Willcocks, R. T. June 14.

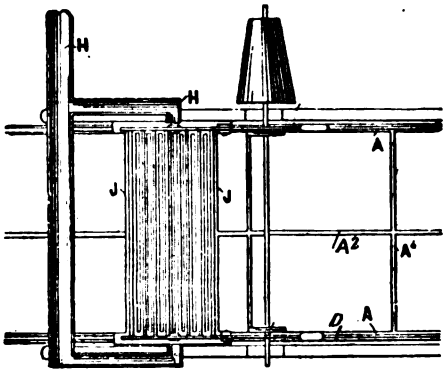

Paper machines.—To make sheets similar to hand-made paper, the deckles A are made with cross-bars A^1 and intermediate bars A^2, and are driven at the same rate as the wire-cloth by gear chains D, sunk in the edges of the deckle frames A. The pulp is supplied from a shoot H to a series of troughs J, from which it may be delivered as desired by displacement, by tipping the troughs, by valves, or by other suitable means. The wire, deckles, and couch-rolls may be supported on

Digitized by Google

knuckle, ball, or other joints, a vibratory motion being imparted to them by cams &c. The suction box is arranged before the end of the deckles, and the latter are passed through a washing-trough.

8840. Boake, A., and **Roberts, F. G. A.** June 16.

Bleaching.—Sodium metasulphite is used to discharge the excess of chlorine or of chlorine compounds.

8906. Palmer, T. J. June 18. *Drawings to Specification.*

Paper machines.—The wet end of a paper-making machine is combined with special means for embossing the said paper.

8981. Aria, C. D. June 19.

Pulp, treating; papier mâché.—Paper pulp, papier mâché, &c. are treated to render them impervious to acids, water, air, mineral oils, and other liquids or gases by immersing in a solution of gutta-percha in bisulphide of carbon. A solution of gum lac, shellac, or one of the gums of the copal family is afterwards added, and after 12 hours or more the material is removed, pressed, and dried. The finished material is specially useful in certain electric batteries to separate the exciting solutions or liquids.

9106. Annandale, J. H. June 22.

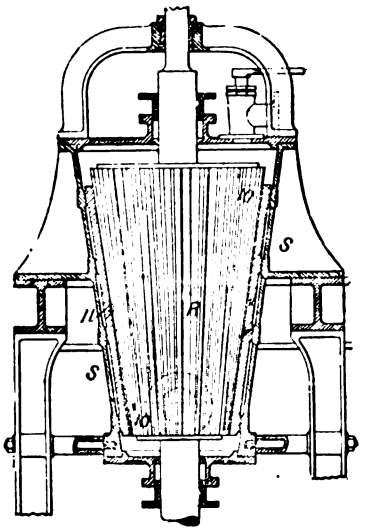

Processes, compound.—The materials after being boiled are passed successively through a special breaking-engine, a rotating conical drainer or "save-all," a bleaching-chest, and coarse and fine strainers, over sand-tables, and through a second "save-all" to a truck. The bleached half-stuff is then passed successively through a chest in which it is mixed with sizing-materials, a second breaking or beating engine, and a chest in which it is mixed with loading and colouring materials &c. It is then ready for being passed through the usual apparatus to the paper-making machine.

Boiling.—The steam from the boilers is utilized for heating fresh water, and, after blowing off the leys, the materials may be drenched with boiling water.

Pulping-engines.—The roll consists of a vertical inverted cone R, and works in a casing S, having knives 11 in segments arranged continuously or at intervals around its circumference. The knives 10, 11 are arranged at a slight inclination to each other, and the materials are fed in near the bottom of the engine.

Strainers.—The conical drainers or "save-alls" are made of perforated metal, instead of wire-gauze, near the larger end, and provided inside with rollers.

Mixing pulp; bleaching; sizing; weighting pulp.—The bleaching, sizing, and loading chests are circular in plan and have a basin-shaped bottom. Circulation is produced through a central pipe by a propeller, operated by a vertical shaft through the pipe and suitable gearing. In the final mixing-chest rotating mixing-paddles are carried by horizontal arms on a tubular shaft surrounding the propeller shaft and driven by separate gearing.

9321. Danielson, L. G. June 26. *Drawings to Specification.*

Compound paper.—Paper is made with one side sized and the other unsized, or with one side more impregnated with size than the other, by uniting upon one press felt two layers formed on a double-cylinder machine and passing them together through the press and drying-apparatus.

9339. Goodall, T., and **Webster, T.** June 26.

Strainers.—Relates to the invention described in Specification No. 5528, A.D. 1887, in which vertical strainer plates are used, and consists in a method of actuating the agitating-apparatus. The Figure shows a vertical section through one form of the apparatus. The pulp is fed into the tank 4 outside the strainer plates 5, and is drawn through them by the horizontal reciprocation of the plates 7, which are attached to the frame 11 by flexible rings 12, and receive this motion from a crank through the connecting-rod 19 and lever 15. Instead of the lever 15 a vertically-reciprocating rod working the plates through toggle-levers may be used. Several strainers may be arranged in the same tank and worked from the same crank; they are separated by partitions 6 so that one may be cleaned, while the others are at work.

(*For Drawing see next page.*)

Digitized by Google

9339.

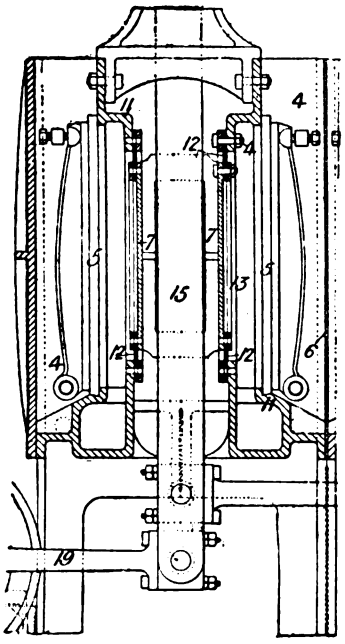

9942. Annandale, J. H. July 9.

Paper machines.—A vertical jogging motion is given to the wire-cloth by ratchet-like cams L, acting upon adjustable studs K on the end frames B. The shaft M is driven by bevel gearing from a cross-shaft P.

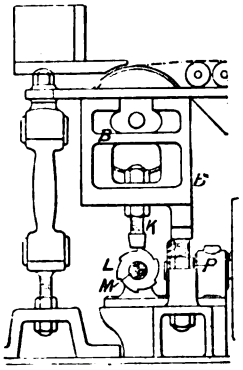

10,107. Snell, C. S. July 11. *Drawings to Specification.*

Fireproof and waterproof paper.—Paper for casing electric conductors is treated in the pulp stage with waterproofing or fireproof materials, or both. The fireproof composition may consist of asbestos, alum, and borax, or tallow, soap, and alum, &c., and the waterproofing-composition of an ammoniacal solution of oxide of copper.

10,915. Grozier, W. D. July 28.

Strainers.—One or more openings are provided to admit a regulated amount of air to the suction chamber during the straining operation. The valve shown may be used, and the pipe D may be screwed into the strainer plate itself, or into a pipe leading to the suction chamber. The spindle I is screwed by the hand-wheel K, through the perforated plate H, to regulate the amount of air admitted.

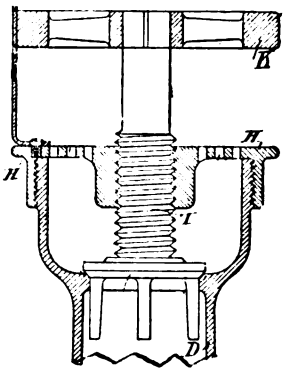

11,150. Dahl, C. F. Aug. 1.

Boiling; washing pulp.—In making paper pulp from esparto, straw, &c., the materials are boiled under pressure with a caustic lye, and are then driven or blown out from the boiler through a suitable pipe direct to a closed washing cylinder or vessel. A disintegration of the fibres into pulp is thus effected. The pulp is then washed under pressure with warm lye, warm water, and cold water, entering in turn through a perforated pipe in the upper part of the cylinder. The contents are then discharged, for further treatment, through a valve at the bottom of the cylinder.

11,458. Bache-Wug, H., Bache-Wug, C., and Drewsen, V. B. Aug. 8.

Bleaching pulp. Crude cellulose obtained by the sulphite, sulphate, or soda processes is treated for purification by a suitable permanganate in a sulphuric acid solution, the resulting oxide of manganese being afterwards dissolved by a suitable reducing-agent, such as sulphurous acid. In some cases the crude cellulose may be treated first with chloride of lime.

11,826. Thompson, W. P., [*Fileppi, D.*]. Aug. 16. *Drawings to Specification.*

Paper machines; felts.—Endless wire and other fabrics for use in paper-making are made by weaving, the warp consisting of one or more continuous threads.

11,841. Bertram, A. N. Aug. 16.

Waste products, treatment of.—Relates to condensing noxious fumes or gases arising from chemical manufactures or processes, especially the vapours arising from recovered soda in paper works. The gases are drawn into an airtight brick chamber by an air propeller D on the blades of

Digitized by Google

which are directed sprays of water. The uncondensed gases or fumes pass over one wall B and beneath another B, and thence pass to the

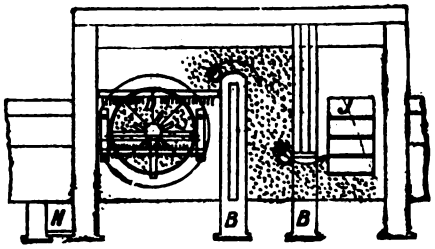

flue J. As they pass over and under the wall they are met by other water sprays. The water, with the gases &c. in solution, collects on the floor, and flows out by a discharge pipe H to the drain.

11,848. Lake, H. H., [*Selkirk, A.*]. Aug. 16.

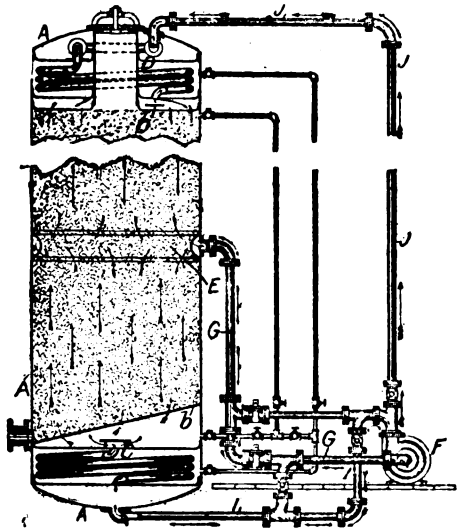

Boiling.—The invention is for the treatment of vegetable substances for the manufacture of paper pulp or stock. The vegetable substances are packed in a strong vertical boiler and subjected to the action of a highly-heated cooking-liquor, which is injected at both the top and bottom of the boiler, and extracted at the middle. A is the iron or steel boiler with perforated end plates *b*, *b*^{1}, and a perforated annular chamber E from which the liquid is extracted. The liquor is conveyed to the boiler from the pump F by the pipes I and J, which pass through the steam-heated chambers C and D, and is withdrawn by the pump through the pipe G. The arrows show the direction of the currents.

12,190. Weygang, C. Aug. 23.

Materials, fibrous; sizes.—In making waterproof or other papers and boards a mixture of peat, wood-pulp, wood-flour, &c. with a starch, resin, or oil size is employed as sizing-material. In some cases soap may be added, and metallic salts as required. Or raw peat is added to the pulp together with peat boiled with an alkali, a resin or oil size being used.

12,502. Hall, W. Aug. 30.

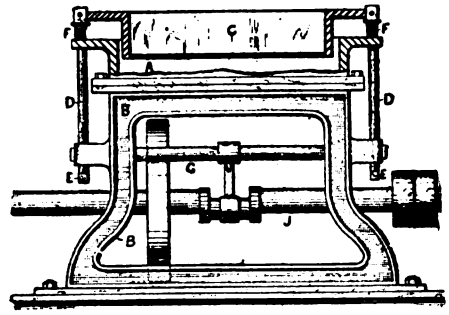

Strainers for paper pulp and the like. The strainer consists of two boxes A, C, the former fixed to the framing B, and the latter, which carries the strainer-plate I, capable of being reciprocated vertically against the action of springs F by rods D from the rocking shaft G. The shaft G carries cams at its ends to engage with transverse links E, and is rocked by an arm from the crank shaft J.

12,687. Robert, C. W. J. L. Sept. 3.

Watermarking. — The electrotyped filigranes, which are fixed to the dandy-rolls or moulds, are made throughout of copper, deposited by the electric battery.

13,192. Andreoli, E. M. H. Sept. 12.

Bleaching pulp. Relates to improvements on Specification No. 8161, A.D. 1888, and consists in employing as electrodes electric-arc carbons fixed in a frame; or in employing electrodes prepared as follows:—The dust of logwood or other hard wood may be made into a paste with sugar, and then compressed into slabs, or moulded into sticks, rods, &c. and carbonized; but preferably charcoal, previously crushed to fine powder and treated with hydrofluoric acid, is mixed with sugar solutions, then submitted to hydraulic or steam pressure, and carbonized. The cake produced is again pulverized and mixed with syrup, and after being moulded to the required form the mixture is again carbonized. It is an important feature of the invention that the carbonizing should be repeated at least once. The electrodes are preferably formed of prismatic or cylindrical rods, prepared as above, and afterwards coppered and tinned at their upper ends and formed into a grid by casting a lead coating on the top ends, along which a copper rod is then soldered. The upper parts are then insulated and the lower ends fixed in a wooden frame.

Digitized by Google

13,193. Andreoli, E. M. H. Sept. 12.

Bleaching pulp. A chloride of sodium solution, preferably made alkaline by the addition of soda crystals &c., is decomposed in the presence of dense carbon electrodes. These electrodes are preferably prepared by moulding plates, rods, &c. of pulverized wood charcoal, mixed with a solution of sugar or other agglutinative readily transformable into carbon, and alternately baking them and immersing them in the solution several times. The rods thus prepared may be made into a grid by forming a leaden and a wooden head upon them. Carbons for electric arc lamps &c. may be substituted, and either a continuous or an alternating current dynamo may be used.

13,396. Salomon, F., and **Brüngger, H.** Sept. 17. *Drawings to Specification.*

Boiling.—Boilers used in the manufacture of sulphite cellulose are protected internally by a deposited coating or film, produced by heating from without the internally-exposed iron or steel wall to a temperature of 100° C. or more and then admitting the sulphite solution.

13,741. Schulte, H. Sept. 22.

Rag-engines; washing pulp.—The stuff is disintegrated by the rotating horizontal disc L, made of stone or metal, and working in combination with one or two fixed discs N^1, N^2. The disc L is open at the centre, and has curved arms, which help to circulate the stuff from the outer compartment R to the inner G, as shown. The latter has an adjustable extension ring S, counterbalanced by weights, and a solid or hollow conical breasting K. The fixed discs have pockets or recesses *e*, and the rotary disc has large grooves in addition to the disintegrating-grooves to allow the stuff to circulate more easily. The upper part of the disc L and the disc N^1 may be of stone, and the lower part and the disc N^2 of metal, and the central opening may be closed by a cover. Both the upper and lower discs can be adjusted vertically by screws, operated by worm gearing. For washing purposes the waste water passes off through inclined sieves g^1 at the sides.

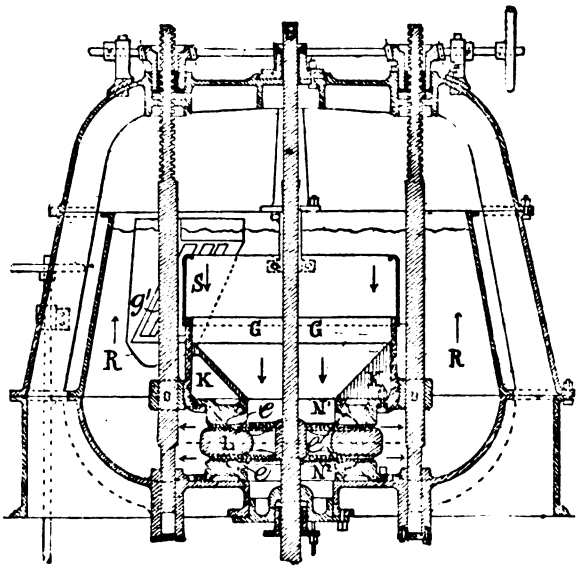

Mixing pulp; bleaching.— The compartment G is fixed, and the extension ring S dispensed with. The disintegrator is also replaced by a wheel with vanes, or a stone disc with large grooves may be used.

13,917. Schlesinger, H. A. Sept. 27.

Compound paper is formed by uniting two or more layers of paper which has been saturated with gelatine or glue, alone or mixed with resinous or fatty substances or soap, rendered insoluble by passing the material through a bath of chrome alum and the like. The paper employed may also be treated with glycerine, vaseline, or oil to render it soft, tough, and pliant, and may be medicated or rendered antiseptic and also aromatized, and perforated.

14,235. Burrows, W. A. Oct. 3.

Materials, fibrous.—Waste pieces or scraps of leather are disintegrated into fine shreds or flock, and then treated and mixed with various substances according to the kind of composition required. To form paper board and like articles, the leather waste is mixed with a fibrous material and made into a pulp, which is treated in the usual manner.

14,643. McDougall, I. S., and **McDougall, J. T.** Oct. 11.

Boiling.—The boiler A, preferably of the form shown, is lined with lead or other acid-resisting material H, and is partially or wholly enclosed by a casing C forming a separate steam space D, for equalizing the temperature and pressure on the two sides of the walls A. The pipe I for the admission of steam &c. leads to the bottom of the cylindrical portion of the boiler. The lining is formed with

Digitized by Google

either butt or lap joints, but in each case the edges are turned over the body-plates, or are covered inside or outside, or both, with acid-resisting material. To prevent damage to the lining by the

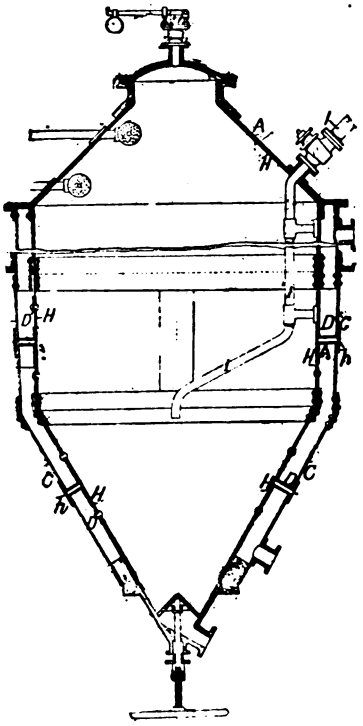

vapourization of water, which may leak between it and the shell, the latter is perforated at intervals, and if the jacket covers the perforations they are connected to the outside by tubes *h*, which may also form strengthening-stays. The boilers may be cylindrical or spherical, and the jackets may be in sections, forming belts or otherwise.

15,234. Lake, H. H., [*Greenleaf, O. S.*]. Oct. 23. *Drawings to Specification.*

Paper machines. — Apparatus for slitting the web of paper into strips, after leaving the driers, is fitted to paper-making machines.

15,451. Wrigley, F. Oct. 27.

Damping.— For damping paper between the drying-cylinders and calendering-rollers of the paper-making machine, an endless felt *c*, dipping into a trough *e* of water, and passing between squeezing-rollers *f*, passes partly round a cylinder *b* of wood or other suitable material, and in contact with the paper, as shown. Thick paper may be damped on both sides by employing another endless felt, which passes between it and the cylinder, and in both cases the water may be applied to the felts by the squeezing-rollers.

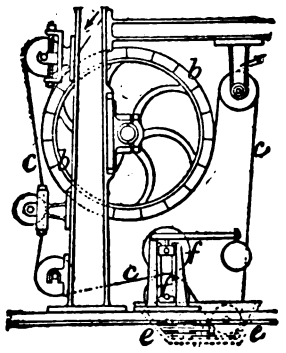

15,659. Molyneux, P. Oct. 31.

Papier mâché.—Relates to a material for airtight receptacles for perishable goods. The material consists of paper &c. pulp impregnated with a composition described in Specification No. 6582, A.D. 1887, and which is made up of methylated spirit, shellac, gum arabic, glycerine, and body-giving materials, such as black oxide of iron &c. Or the pulp may be impregnated with a solution containing only a part of the above ingredients, and the finished article then painted with the composition.

15,675. McDougal, T., and **Jardine, J.** Oct. 31.

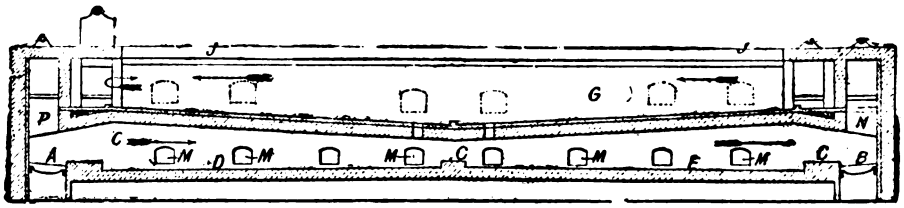

Waste products, treatment of.—Relates to apparatus for incinerating spent or used alkaline lyes, such as are produced in paper-making, or other waste products or precipitates containing carbonaceous matter. It consists of a duplex reversible arrangement of fuel grates, hearths, and flues. At the ends of a long flue C are two fuel grates A and B, the floor of the flue being slightly depressed to form two hearths D, E. At the ends, the flue C communicates, by passages P, N, with an upper flue G, divided by a longitudinal wall into two parts, the bottom of which slopes towards the centre, the greater portion of the top being formed by evaporating-pans J. In operation, the hearths D, E are covered with used lye, which has been concentrated in the pans J and flue G. When the carbonaceous lye in the hearth D becomes sufficiently dry to take fire, the dampers in the various passages are so arranged that the current of hot gases passes in the direction shown over the hearth E and through the upper flues G. The ash remaining is removed through doors M, and the hearth is recharged

Digitized by Google

from the upper flue, which is in turn supplied from the trays J. When the lye on the hearth E fires, the dampers are altered, and the direction of the current is reversed.

15,956. Shorrock, J. H. Nov. 5.

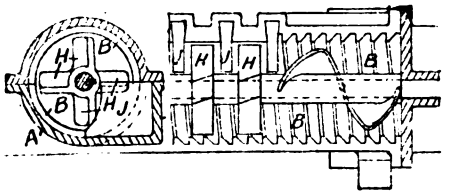

Pulping-engines.—Wood pulp &c. is broken up into small pieces for the rag-engine, or other machine, by passing between fluted rollers to the cylindrical vessel A, which has an internal screw thread B, and knives or blades H rotating between plates J. The blades H get narrower towards the outlet end of the machine, and, if desired, water or other liquid may be supplied to it.

16,932. Tidcombe, G. Nov. 21.

Pulping-engines.—The rolls are made of cast steel, either in one piece or in sections, and the teeth are made by cutting, planing, or otherwise forming grooves on their surfaces, as shown in the Figure.

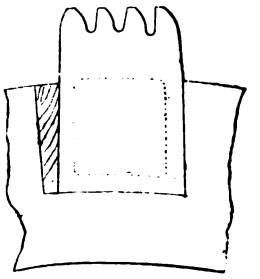

17,189. Mills, C. K., [*Morel, C.*]. Nov. 26.

Pulping-engines.—Relates to a ball-and-ring mill for cement, lime, paper pulp, &c. The apparatus, which is adapted to replace a pair of millstones, consists of a casing formed with a diaphragm L upon which rests the ring A kept in position by set-screws B. The balls are driven by arms with steel driving-plates on the disc C, which is secured to the spindle D, and are supported, when at rest, by the ring R. The feed supplied by the hopper G passes down through the neck I and is thrown out against the ring.

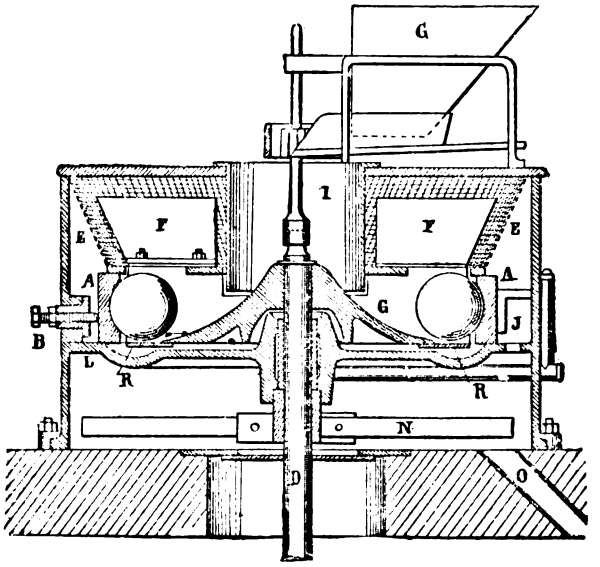

17,227. Lake, H. H., [*Atkins, C. H.*]. Nov. 27.

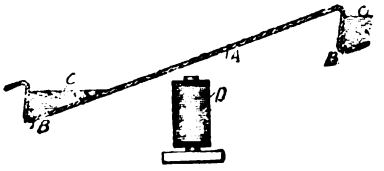

Pulp, separating metals from.—The pulp passes from the engine to the vat over a sheet of copper A, formed with a series of troughs B to contain mercury C, and having a series of electromagnets D arranged beneath it.

17,693. Furstenburg, R. W. Dec. 4.

Paper boards.—Relates to the manufacture of waterproof and fire and weather resisting material for roof coverings. A mixture, in specified proportion, of asbestos fibre, asbestos card waste, zinc oxide, curd soap, alum, carbonate of soda, sugar of lead, and zinc choride is made into sheets or slabs by the ordinary process for making carton.

17,876. Lundberg, A. Dec. 7.

Boiling.—Boilers for wood or the like are provided with a compound acid-proof lining, composed of lead

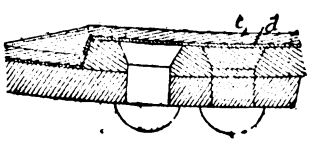

Digitized by Google

or lead alloy *c*, fused upon the tinned surface of a comparatively-thin backing *d* of iron, zinc, copper, or copper alloy. The boiler, whether spherical or cylindrical, is formed of conical or tapering segments, connected together by lap joints, as shown.

18,003. Salomon, F., and **Brüngger, H.** Dec. 10. *Drawings to Specification.*

Boiling.—Boilers used in the sulphite process are coated internally with a protective scale, formed by heating a solution of gypsum or other suitable salt, which is not used in the boiling process. To allow the escape of gases or vapours evolved during the production of a scale, according to this Specification, or Specification No. 13,396, A.D. 1888, the boiler is provided with a valve.

18,039. Hilton, M. L. Dec. 11.

Mixing pulp.—Relates to a machine for mixing paper or other pulps &c. A container *a*, which may be heated by jacketing, or in any other suitable way, is fitted across the top with a frame *b* which supports a vertical shaft *c*, carrying arms *u* provided with stirrers *v*. This shaft is rotated alternately in opposite directions through a horizontal shaft G and bevel gearing *e*, *f*. The shaft G is driven through the reversing-motion, as shown, which consists of three pulleys *i*, *j*, *k* fixed upon a shaft *h*, one of which drives through two spur-wheels *s*, s^1, and the other *i* through three spur-wheels *q*, *r*, s^{11}. The driving-strap is shifted automatically through a weighted lever *n*, moved by a pin *m* upon a worm-wheel *l*. The reversing-motion may be obtained by driving the shaft G through open and crossed straps.

(*For Drawing see next column.*)

18,039.

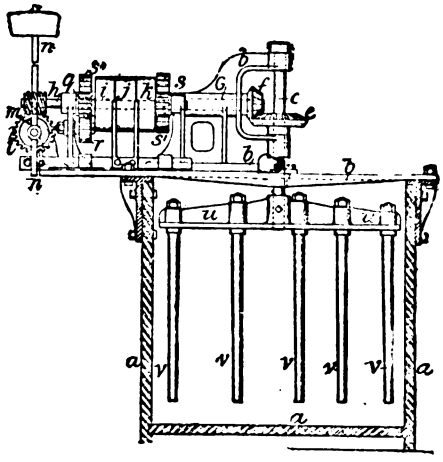

18,107. Lake, H. H., [*Wheeler, S.*]. Dec. 11. *Drawings to Specification.*

Toilet paper, roughening. Indentations or depressions are formed by passing the paper between a felt-covered roller and one covered with wire-cloth or having projections on its surface.

18,658. Diana, A., [*formerly* Lewis]. Dec. 20.

Compound paper.—Paper or cardboard, of two layers of pulp, is made by running one layer upon a suitable web, and, after allowing it to drain off, running the second layer upon the first. The layers may be of the same or different materials or colours.

Digitized by Google

APPENDIX.

The first three abridgments annexed should be added to those appearing in the volume for A.D. 1877–83, and the following cross-reference in the index to that volume *deleted* :—

Paper and paper-making :
wire fabrics for. *See Abridgment Class* Weaving &c.

A.D. 1881

4328. Whiting, M. M. Oct. 5.

Wire cloths.—Relates to wire and other metal work, particularly applicable for the manufacture of wire gauze employed in paper manufacture. Thick phosphor brass or bronze wire is immersed in a bath of from 0·125 to 5 per cent. of phosphorus, with 5 per cent. of sulphuric acid and 95 per cent. of water. It is then drawn down one gauge thinner. It is now placed in an open pot having a thin layer of phosphorus at the bottom ; it is then bedded in charcoal, which is ignited and left burning for several hours ; the heat softens the wire and makes it ready for drawing again. By alternating these processes the wire can be drawn down to any gauge required. This process phosphorizes the metal, and produces the quality of metal called phosphorized by the inventor. It is stated that phosphor and phosphorized bronze and brass will neither rust nor corrode, are stronger than iron or steel and more durable than copper, and can be rolled and drawn as soft as lead or as hard as steel.

A.D. 1882.

2212. Arnold, A. May 10. *Drawings to Specification.*

Wire cloths for use in paper mills. The fabric is woven of suitable size and strength with bright or annealed steel wire, or a combination of iron and steel wire, the fabric being afterwards hardened and tempered.

Digitized by Google

5993. Greening, M., and Greening, L. Dec. 15.

Wire cloths.—A fabric is made with warps of semicircular or other cross-section arranged in sets of varying sizes, while the weft is square or of other cross-section, and is knocked up close together, interlacing with the warp, and producing a fabric, in which the only direct thoroughfares between the wires are at an angle to the surface of the cloth.

A.D. 1884.

8245. Turner, J. A. May 26.

Wall paper.—Relates to the manufacture of waterproof printed wall papers. A coating of vegetable pitch or other waterproof cement is applied to the back of the paper, a backing of paper or woven fabric being then applied to the cement. By these means waterproof paper sufficiently stiff to be hung without being cemented to the wall is obtained.

A.D. 1885.

4958. Lake, W. R., [*Miragoli, E. S.*]. April 21. *Drawings to Specification.*

Wall and ceiling paper.—The material is embossed and coloured in sections which may be readily handled and combined in various ways upon the wall or ceiling. One or more sheets of bibulous paper are first pressed into an intaglio mould, and then a sheet of any suitable textile fabric is added. The combined sheets are then dipped in oil, dried, and coloured.

A.D. 1886.

3572. Thompson, W. P., [*Pond, J. A.*]. March 13.

Papier mâché, coating. The principal object is to provide a cheap form of impervious package for edible substances &c. The coating consists of shellac, to which may be added 2 to 6 per cent. of beeswax or stearic or other fatty acid, and is applied to the papier mâché &c. by passing between high-pressure rolls, the lower of which is supplied with the coating-substance and is heated to 230–300° F. by internal gas jets &c.

Digitized by Google

3665. Allison, H. J., [*Nenninger, R. F.*]. March 16.

Wall and floor paper.—Consists of animal or vegetable or other fibre such as paper pulp &c. agglutinated by a waterproof resinous or gummy substance. A method of preparing from paper pulp is as follows:—The pulp taken from the machine in lengths after drying and before pressing is impregnated with resinous substance produced by heating linseed oil to a high temperature, dissolved in naphtha. After heating to expel the naphtha the sheets may be rolled or pressed in any desired form.

A.D. 1888.

2288. Storey, H. L., and **Storey, I. H.** Feb. 15.

Compound paper.—Consists in the manufacture of a strong waterproof decorated material for covering walls &c. Canvas or other fabric is passed with paper pulp through rolls, and the material is treated in the same manner as paper until it is dried. The material is then impregnated or coated with a water-resisting medium or paint, and is further treated.

LONDON:
PRINTED FOR HER MAJESTY'S STATIONERY OFFICE,
BY DARLING & SON, LTD., 1, 2, 3 & 5, GREAT ST. THOMAS APOSTLE, E.C.
PUBLISHED AT THE PATENT OFFICE, 25, SOUTHAMPTON BUILDINGS,
CHANCERY LANE, LONDON, W.C.

1896.

Digitized by Google

PATENTS FOR INVENTIONS.

THE NEW YORK PUBLIC LIBRARY
ASTOR, LENOX AND TILDEN FOUNDATIONS

ABRIDGMENTS OF SPECIFICATIONS.

CLASS 97,

PHILOSOPHICAL INSTRUMENTS,

[*including* OPTICAL, NAUTICAL, SURVEYING, MATHEMATICAL,

and METEOROLOGICAL INSTRUMENTS].

PERIOD—A.D. 1884–88.

LONDON:
PRINTED FOR HER MAJESTY'S STATIONERY OFFICE,
BY DARLING & SON, LTD., 1, 2, 3 & 5, GREAT ST. THOMAS APOSTLE, E.C.
PUBLISHED AT THE PATENT OFFICE, 25, SOUTHAMPTON BUILDINGS,
CHANCERY LANE, LONDON, W.C.

1896.

PRICE ONE SHILLING.

Digitized by Google

Digitized by Google

PATENTS FOR INVENTIONS.

THE NEW YORK PUBLIC LIBRARY
ASTOR, LENOX AND TILDEN FOUNDATIONS

ABRIDGMENTS OF SPECIFICATIONS.

CLASS 97,

PHILOSOPHICAL INSTRUMENTS,

[*including* OPTICAL, NAUTICAL, SURVEYING, MATHEMATICAL,

and METEOROLOGICAL INSTRUMENTS].

PERIOD—A.D. 1884–88.

LONDON:
PRINTED FOR HER MAJESTY'S STATIONERY OFFICE,
BY DARLING & SON, LTD., 1, 2, 3 & 5, GREAT ST. THOMAS APOSTLE, E.C.
PUBLISHED AT THE PATENT OFFICE, 25, SOUTHAMPTON BUILDINGS,
CHANCERY LANE, LONDON, W.C.

1896.

Digitized by Google

THE NEW YORK
PUBLIC LIBRARY

ASTOR, LENOX AND
TILDEN FOUNDATIONS.
1898.

THE ASTOR LIBRARY
NY

Digitized by Google

EXPLANATORY NOTE.

The contents of this Abridgment Class may be seen from its Subject-matter Index. For further information as to the classification of the subject-matter of inventions, reference should be made to the *Abridgment-Class and Index Key*, published at the Patent Office, 25, Southampton Buildings, Chancery Lane, W.C., price One Shilling, postage (parcel post) Sixpence.

It should be borne in mind that the abridgments are merely intended to serve as guides to the Specifications, which must themselves be consulted for the details of any particular invention. Printed Specifications, price Eightpence, may be purchased at the Patent Office, or ordered by post on the Patents Form C[1] (to be obtained from any Post Office), no additional charge being made for postage.

SUBJECT-MATTER INDEX.

Abridgments are printed in the chronological order of the Specifications to which they refer, and this index quotes only the year and number of each Specification.

Acidimeters. *See* Specific gravity estimating apparatus.

Actinometers. *See* Photometers &c.

Adjustments. *See* special headings, *such as* Mathematical drawing-instruments; Microscopes; Telescopes &c.

Alcoholmeters. *See* Specific gravity estimating apparatus.

Altitudes, Angular, Measuring. *See* Clinometers &c.; Sextants &c.; Theodolites.

Altitudes, Linear, Measuring. *See* Surveying-instruments.

Anemometers. '*84*. 3881. 13,182. '*85*. 13,269. '*86*. 1345. 8920. 11,041. '*87*. 1581. 7182. 8600. 10,595. '*88*. 2309. 3017.
wind vanes. *See* Wind vanes.

Aneroid barometers. *See* Barometers.

Angle-measuring instruments. *See* Bearings and courses, Determining, indicating, correcting, and plotting; Bevels and mitres, [*Abridgment Class* Hand tools &c.]; Clinometers &c.; Gauges, [*Abridgment Class* Registering &c.]; Goniometers &c.; Latitude instruments; Mathematical drawing-instruments; Protractors &c.; Sextants, quadrants, and the like; Surveying-instruments; Telemeters; Theodolites.

Angles, Plotting, Instruments for. *See* Mathematical drawing-instruments.

Astigmatism, Testing. *See* Sight-testing apparatus.

Astronomical charts. *See Abridgment Class* Writing-instruments &c.

Astronomical instruments. *See* Bearings and courses, Determining &c.; Globes and orreries, [*Abridgment Class* Writing-instruments &c.]; Gyroscopic apparatus; Latitude instruments; Lenses; Reflectors; Sextants &c.; Telescopes &c.

Digitized by Google

Astronomical instruments, (unspecified), Speed regulators for. *See Abridgment Class* Governors &c.

Azimuth instruments. *See* Bearings &c., Determining &c.; Compasses, Magnetic; Sextants &c.; Surveying-instruments; Theodolites.

Barometers. '*84*. 1101. 3881. 4132. 9116. 16,054. '*85*. 3221. 9028. 9857. 11,898. 12,582. '*86*. 3023. 3425. 3625. 11,041. 14,730. '*87*. 1324. 5357. 6907. 14,424. 15,844. '*88*. 2526. 2673. 3021. 4668. 9452. 16,538.
advertising on or in connection with. *See Abridgment Class* Advertising &c.

Bearings and courses, Determining, indicating, correcting, and plotting. '*84*. 1397. 5921. 6842. 8394. 10,112. 13,964. 14,862. 15,951. '*85*. 3536. 7270. 7360. '*86*. 700. 5996. 7077. 8230. 9936. '*87*. 1884. 6489. 12,601. '*88*. 362. 5297. 7110. 9520. 16,663.
Excepting Compasses, Magnetic; Latitude instruments; Sextants, quadrants, and the like; Surveying-instruments; Telemeters; Theodolites;
for which see those headings.
calculating-apparatus. *See Abridgment Class* Registering &c.

Binnacles. *See* Compasses, Magnetic.

Calculating-apparatus. *See Abridgment Class* Registering &c.

Calorimeters. '*84*. 16,940.

Camera obscuras. '*86*. 5139.

Carpenters' squares and the like. *See* Squares, Drawing and like.

Centre of gravity, Adjusting. *See* Gravity, Adjusting centre of.

Centrolineads. *See* Mathematical drawing-instruments.

Charts and plans, Laying-off and measuring courses and bearings on. *See* Bearings and courses, Determining &c.

Chromatropes. '*84*. 12,382.

Clinical thermometers. *See* Thermometers &c.

Clinometers and other instruments for measuring vertical angles and angular altitudes. '*84*. 217. 1397. 6181. 11,469. '*85*. 1964. 2372. 6260. '*86*. 4433. 7664. 9936. 11,220. '*87*. 1082. 4198. 5913. 6280. 6383. 11,578. '*88*. 7124. 9520. 10,263. 11,133. 11,429. 14,818. 15,472. 18,912.
Excepting Latitude instruments; Sextants, quadrants, and the like; Theodolites;
for which see those headings.
trim indicators for ships. *See Abridgment Class* Ships &c., Div. I.

Colours, Matching. *See* Colours &c., Comparing &c.

Colours, surfaces, textures, and the like, Comparing and testing. '*85*. 1246. 8335. '*86*. 12,867. '*87*. 3859. 8754. '*88*. 5688.
Excepting Fabrics, Testing, [*Abridgment Class* Fabrics, Dressing &c.];
for which see that heading.

Compasses, Drawing. *See* Mathematical drawing-instruments.

Compasses, Magnetic. '*84*. 217, [*page* 1 and *Appendix, page* 170]. 926. 1397. 3196. 3852. 3881. 6181. 6288. 8393. 9461. 10,075. 11,603. 11,962. 13,547. 13,964. 14,060. 14,862. 15,951. '*85*. 18. 321. 665. 2350. 7270. 7659. 8653. 9849. 10,366. 11,213. 13,334. 15,537. '*86*. 1038. 6275. 6353. 7077. 8230. 8334. 12,176. 14,960. '*87*. 1884. 1926. 4198. 5470. 6489. 8714. 9520. 12,880. 14,783. 15,223. 15,591. '*88*. 483. 6076. 9293. 9926. 10,053. 10,101. 12,153. 16,468. 16,663. 17,711. 18,019.
controlling steering-gear by. *See Abridgment Class* Ships &c., Div. II.
jewellery for holding. *See Abridgment Class* Fastenings, Dress.
lamps for lighting. *See Abridgment Class* Lamps &c.

Compasses, Non-magnetic. *See* Bearings and courses, Determining &c.

Condensers or lenses. *See* Lenses.

Course indicators and correctors. *See* Bearings and courses, Determining &c.; Compasses, Magnetic.

Current meters. *See* Anemometers; Logs and leeway indicators.

Curve-drawing instruments and moulds. *See* Mathematical drawing-instruments.

Curves, Railway and like, Setting-out. *See* Surveying-instruments.

Dampness indicators and detectors for beds, linen, and the like. *See* Hygrometers &c.

Density indicators. *See* Specific gravity estimating apparatus.

Departure rules. *See* Bearings and courses, Determining &c.; Telemeters.

Dials and the like for instruments. *See* Barometers; Bearings and courses, Determining &c.; Clinometers &c.; Compasses, Magnetic; Latitude instruments.

Dissolving-view apparatus. *See* Magic-lanterns &c.

Distance indicators. *See* Logs &c.; Telemeters.

Dividers and dividing-instruments for circles, arcs, and straight lines. *See* Mathematical drawing-instruments.

Dotting-pens. *See* Ruling, dotting, &c. devices.

Drawing-instruments, Mathematical. *See* Mathematical drawing-instruments.

Digitized by Google

Ellipsographs and like curve-drawing instruments. *See* Mathematical drawing-instruments.

Eyeglasses. *See* Spectacles &c.

Eye protectors and shades. *See* Protectors and shades, Eye &c.

Eyesight, Testing. *See* Sight-testing apparatus.

Field glasses. *See* Telescopes &c.

French curves and the like. *See* Mathematical drawing-instruments.

Gases, Indicating speed of flow. *See* Anemometers.

Globes and orreries. *See Abridgment Class* Writing-instruments &c.

Goggles. *See* Spectacles &c.

Goniometers and other instruments for measuring solid angles. '86. 10,068. '87. 13,313. '88. 13,258. 16,695. 18,438.

Graphoscopes. *See* Reading-glasses &c.

Gravity, Adjusting centre of. '88. 15,728.

Gravity, Measuring force of. '88. 11,809.

Gyroscopic apparatus. '84. 6842. 8394. '86. 14,208, [*Appendix, page* 171].

Heights, Measuring. *See* Barometers; Surveying-instruments.

Horizons, Artificial. '86. 9844.

Humidity, Testing. *See* Hygrometers &c.

Hydrometers. *See* Specific gravity estimating apparatus.

Hygrometers and hygroscopes, [*including* means for detecting dampness in linen and the like]. '84. 5164. 13,044. '86. 11,041. '87. 5235. 6730. 6907.

Kaleidoscopes. '85. 14,669. '87. 11,317. 11,621. '88. 2924. 3657. 8068. 17,007.

Lantern microscopes. *See* Magic-lanterns &c.

Lanterns, Optical. *See* Magic-lanterns &c.

Latitude instruments. '84. 960. 1397. 6842. '85. 9699.
Excepting Sextants, quadrants, and the like; Theodolites;
for which see those headings.

Leads for sea-sounding. *See* Sounding-apparatus &c.

Leeway indicators. *See* Logs &c.

Lenses. '85. 10,920. 11,985. '86. 9798. 12,148. 14,650. 14,931. '87. 3689. 13,186. '88. 5194. 7695.
Excepting lenses adapted to special purposes such as Lamp lenses, [*Abridgment Class* Lamps &c.]; Magic-lanterns &c.; Microscopes; Pavement lights, [*Abridgment Class* Roads &c.]; Photography, [*Abridgment Class* Photography]; Reading-glasses and graphoscopes; Ships, (*cabin and deck lights*), [*Abridgment Class* Ships &c., Div. I.]; Spectacles and eyeglasses; Telescopes and opera and field glasses;
for which see those headings.

Levelling-staves. *See* Surveying-instruments.

Levels and plumbing-instruments. '84. 6994. 9793. 11,469. 12,175. '85. 1964. 2372. 5073. 6260. 6399. 12,278. 15,133. '86. 2130. 2967. 4433. 6337. 7664. 9244. 11,220. 13,436. '87. 1346. 1364. 5913. 6280. 6383. 6539. 11,578. 14,216. 17,503. '88. 11,429. 14,818.
trim indicators for ships. *See Abridgment Class* Ships &c., Div. I.

Logs and leeway indicators, [*including* Current meters]. '84. 2510. 3666. 5571. 6369. 11,284. 13,366. '85. 3162. 7175. 7996. 11,336. 12,181. 14,757. '86. 807. 1991. 16,202. '87. 3018. 3419. 4545. 7132. 7469. 7914. 11,964. 14,741. 15,251. '88. 1789. 3017. 9293. 10,299. 10,951. 12,242. 13,176. 18,324. 18,924.

Longitude, Gyroscopic apparatus for determining. *See* Gyroscopic apparatus.

Lorgnettes. *See* Telescopes &c.

Magic-lanterns and like projecting-apparatus. '84. 377. 934. 10,226. 13,371. 13,372. 14,951. 15,440. '85. 3598. '86. 1353. 1980. 2459. 3805. 6154. 6431. 6642. 7344. 8076. 9383. 9469. 10,411. 12,125. 15,187. 15,192. 15,873. '87. 4804. 14,171. 14,809. 18,001. '88. 423. 1635. 4545. 7348. 14,171. 15,736. 16,046. 16,556. 16,785. 17,326. 18,150.
advertising on or in connection with. *See Abridgment Class* Advertising &c.
displaying. *See Abridgment Class* Advertising &c.
enlarging and copying lanterns. *See Abridgment Class* Photography.
lamps and burners for. *See Abridgment Class* Lamps &c.
limelight apparatus for. *See Abridgment Class* Lamps &c.
producing slides by photography. *See Abridgment Class* Photography.
signals. *See Abridgment Class* Signalling &c.
valves and cocks for. *See Abridgment Class* Valves &c.

Magnetic compasses. *See* Compasses, Magnetic.

Magnifying-glasses. *See* Microscopes; Reading-glasses &c.

Digitized by Google

Maps and charts, Plotting bearings and courses on. *See* Bearings and courses, Determining &c.

Marine glasses. *See* Telescopes &c.

Mariners' compasses. *See* Compasses, Magnetic.

Matching colours, textures, and the like. *See* Colours &c., Comparing &c.

Mathematical drawing-instruments:
Excepting Drawing-boards, [*Abridgment Class* Artists' instruments &c.]; Rulers, Drawing and like; Ruling-machines &c., [*Abridgment Class* Printing other than letterpress &c.]; Ruling, dotting, &c. pens &c.; Shading-machines for drawings; Squares, Drawing and like; Tools for setting-out work, [*Abridgment Class* Hand tools &c.];
for which see those headings.
adjusting-screws. '87. 10,712.
angles, plotting. *See* ellipsographs &c. *below.*
arc-describing instruments, (*not* compasses). '84. 1539. '87. 5900.
bow pens and pencils. *See* compasses *below.*
cements for. *See Abridgment Class* Starch &c.
centrolineads. '85. 6260. 12,668. '88. 9442.
circle-describing instruments. *See* arc-describing instruments *above*; compasses *below.*
compasses. '84. 3985. 6375. 9876. 11,469. 13,220. 14,286. 17,031. '85. 914. 3777. 4086. 6064. 6260. 8807. 11,151. 11,990. 12,437. 14,289. 15,199. 15,938. '86. 4449. 11,802. 17,061. '87. 3161. 10,712. '88. 2152. 2218. 4163. 5440. 7105. 11,539. 11,869. 14,253.
curves and figures, plotting and reproducing. *See* ellipsographs &c. *below.*
dividers. '84. 11,469. 13,220. 17,031. '85. 3777. 6688. 11,151. 14,289. 15,938. '86. 4449. '87. 3161. 17,962. '88. 2152. 2218. 16,695.
dividing-instruments. '84. 5369. 5443. 12,046. '85. 3990. 11,990. '88. 13,893.
ellipsographs and other instruments for drawing, plotting, or reproducing curves and figures. '84. 5803. 9876. 12,046. 17,031. '85. 3777. 4582. 11,990. 12,668. '86. 13,581. 17,061. '88. 1423. 5440. 9442. 10,950. 16,070.
French curves and like instruments. *See* ellipsographs &c. *above.*
joints. '84. 13,220. '85. 914. 14,289. 15,938. '86. 11,802.
maps, charts, and plans, instruments for setting out courses and bearings on. *See* Bearings and courses, Determining &c.
pantographs. '84. 11,128. '85. 11,990. '86. 14,899. '87. 2836. 11,032.
perspective drawing-instruments. *See Abridgment Class* Artists' instruments &c.
proportional compasses. '85. 6260. '88. 4163. 7105.
protractors and like angle measuring and plotting instruments. *See* Protractors &c.
scales. '84. 11,698. 14,507. '85. 12,704. '86. 700. 5407. 8984. '87. 627. 4198. 5900. 10,744. 11,362. '88. 2152. 5111. 11,869. 13,893.
section-lining apparatus. '86. 13,581. '88. 10,447. 16,432.
trammels. *See* compasses *above.*

Measuring angles. *See* Bearings and courses, Determining &c.; Bevels and mitres, [*Abridgment Class* Hand tools &c.]; Clinometers &c.; Goniometers &c.; Latitude instruments; Mathematical drawing-instruments; Protractors &c.; Sextants &c.; Ships, (*trim indicators*), [*Abridgment Class* Ships &c., Div. I.]; Surveying-instruments; Telemeters; Theodolites.

Measuring force of gravity. *See* Gravity, Measuring force of.

Measuring heights and distances. *See* Barometers; Surveying-instruments; Telemeters.

Measuring intensity of light. *See* Photometers &c.

Meteorological instruments. *See* Anemometers; Barometers; Hygrometers &c.; Radiometers; Sunshine-recorders; Thermometers &c.; Weather indicators; Wind vanes.

Microphotoscopes. *See* Microscopes.

Microscopes. '84. 202. 912. 7639. 12,952. 12,991. '85. 1027. 1594. '86. 2622. 14,931. '88. 13,258. 16,992. 18,542.
coin-freed apparatus for hiring. *See Abridgment Class* Coin-freed apparatus &c.
lantern microscopes. *See* Magic-lanterns &c.
reading-glasses and graphoscopes. *See* Reading-glasses and graphoscopes.

Microtomes. '87. 9900.

Moisture, Testing. *See* Hygrometers &c.

Monoscopes. *See* Reading-glasses &c.

Navigation, Instruments for use in. *See* Bearings and courses, Determining &c.; Calculating-apparatus, [*Abridgment Class* Registering &c.]; Clocks and watches, (*chronometers*), [*Abridgment Class* Watches &c.]; Compasses, Magnetic; Latitude instruments; Logs and leeway indicators; Mathematical drawing-instruments; Sextants, quadrants, and the like; Telescopes &c.

Objectives. *See* Lenses; Magic-lanterns &c.; Microscopes; Telescopes &c.

Opera glasses. *See* Telescopes &c.

Opsiometers. *See* Sight-testing apparatus.

Optical instruments:
Excepting Bearings and courses, Determining &c.; Camera obscuras; Clinometers &c.; Compasses, Magnetic; Goniometers &c.; Horizons, Artificial; Kaleidoscopes; Laryngoscopes, [*Abridgment Class* Medicine &c.]; Lenses; Levels and plumbing-instruments; Magic-lanterns &c.; Microscopes; Mirrors for use in surgery &c., [*Abridgment Class* Medicine &c.]; Ophthalmoscopes, [*Abridgment Class* Medicine &c.]; Optical instruments, Surgical, [*Abridgment Class* Medicine &c.]; Polarizers and polariscopes; Reading-glasses and graphoscopes; Reflectors; Sextants, quadrants, and the like; Sight-testing

Digitized by Google

Optical instruments—*cont.*
Excepting—*cont.*
apparatus; Spectacles and eyeglasses; Specula, Surgical, [*Abridgment Class* Medicine &c.]; Stereoscopes; Surveying-instruments; Telemeters; Telescopes and opera and field glasses; Theodolites;
for which see those headings.
circumscribing vision in viewing pictures and other objects. '*86*. 6848.
polarized light, excluding. '*86*. 4375.

Optometers. *See* Sight-testing apparatus.

Pantographs. *See* Mathematical drawing-instruments.

Parallel rulers. *See* Rulers, Drawing and like.

Photometers and actinometers. '*84*. 3771. 3881. 6312. 9931. 14,457. '*85*. 3755. '*86*. 4624. 14,548. '*87*. 11,985. 13,332. 15,907. '*88*. 6923. 11,578.

Pince-nez. *See* Spectacles &c.

Plumbing-devices. *See* Levels &c.

Polarizers and polariscopes. '*84*. 14,699. '*86*. 4375. '*88*. 13,258.

Position finders. *See* Bearings and courses, Determining &c.; Telemeters.

Prismatic compasses. *See* Compasses, Magnetic.

Projecting-lanterns. *See* Magic-lanterns &c.

Proportional compasses and instruments. *See* Mathematical drawing-instruments.

Protectors and shades, Eye, face, and like. '*84*. 5086. '*87*. 4614.
Excepting Masks, [*Abridgment Class* Toys &c.]: *for which see that heading.*

Protractors and like angle measuring and plotting instruments. '*84*. 880. 1539. 10,105. 11,469. 11,698. 14,507. '*85*. 2372. 3536. 4530. 6260. 12,704. '*86*. 9936. 10,068. 17,061. '*87*. 627. 4198. 4768. 6741. 12,601. 13,313. '*88*. 4163. 5111. 7596. 11,429. 12,296. 16,695.

Pyrometers. *See* Thermometers &c.

Quadrants. *See* Sextants &c.

Radiometers. '*84*. 3881.

Railway and like curves, Setting-out. *See* Surveying-instruments.

Range-finders. *See* Telemeters.

Reading-glasses and graphoscopes. '*84*. 912. 10,140. '*85*. 1027. '*88*. 8726. 9315.
advertising on or in connection with. *See Abridgment Class* Advertising &c.

Reflectors:
Excepting Daylight reflectors, [*Abridgment Class* Buildings &c.]; Lamp reflectors &c., [*Abridgment Class* Lamps &c.]; Pavement lights, [*Abridgment Class* Roads &c.]; Ships, (*cabin and deck lights*), [*Abridgment Class* Ships &c., Div. I.]; Specula, Surgical, [*Abridgment Class* Medicine &c.]; Steam generators, (*for* reflectors *for water-level indicators*), [*Abridgment Class* Steam generators]; Telemeters; Theodolites;
for which see those headings.
alloys for. *See Abridgment Class* Metals and alloys.
combined with—
spectacles and eyeglasses. '*85*. 3701. '*86*. 2764.
manufacture and construction. '*84*. 9464. 12,382. '*85*. 8222. 10,690. 11,985. '*86*. 2764. '*87*. 14,868. '*88*. 435.
showing objects not directly visible. '*84*. 9464. '*85*. 3701. '*88*. 7987. 15,428.

Roads and the like, Determining curves and inclines of. *See* Clinometers &c.; Surveying-instruments.

Rulers, Drawing and like. '*84*. 74. 880. 6723. 7373. 8248. 13,313. 14,405. '*85*. 3777. 4785. 4858. 6260. 7480. 10,733. 12,668. 12,970. '*86*. 849. 8984. 12,965. 13,581. 14,811. 14,891. '*87*. 627. 4100. 6377. 9487. 10,502. 10,744. 11,362. 12,964. 16,598. 17,227. '*88*. 5111. 6383. 9442. 12,186. 16,432. 17,854.
section-lining apparatus. *See* Mathematical drawing-instruments.
slates modified for use with. *See Abridgment Class* Writing-instruments &c.

Ruling, dotting, tracing, and like pens and devices. '*84*. 641, [*Appendix, page* 170]. 3985. 11,279. '*85*. 8551. '*86*. 5794. 11,802. '*87*. 5465. 8985. 10,712. '*88*. 4405. 13,310. 13,664. 15,505. 15,664.
Excepting Electric and like pens for stencilling, [*Abridgment Class* Writing-instruments &c.]; *for which see that heading.*
filling-brushes for. *See Abridgment Class* Brushing &c.

Saccharometers. *See* Specific gravity estimating apparatus.

Scales, Drawing. *See* Mathematical drawing-instruments.

Scales for instruments. *See special headings, such as* Barometers; Thermometers &c.

Scales, Mathematical. *See* Mathematical drawing-instruments.

Sea-sounding apparatus. *See* Sounding-apparatus &c.

Section-lining apparatus. *See* Mathematical drawing-instruments.

Sectors or protractors. *See* Protractors &c.

Digitized by Google

Set-squares. *See* Squares, Drawing &c.

Sextants, quadrants, and the like. '*84*. 12,088. '*85*. 7412. '*86*. 9844. '*88*. 1794.

Shading-machines for drawings. '*85*. 9772.

Ships' logs. *See* Logs &c.

Sight-testing apparatus. '*85*. 4354. 8870. '*86*. 7820. 11,631. 14,523. 15,786. '*87*. 2249. '*88*. 16,090.

Slides, Magic-lantern. *See* Magic-lanterns &c.

Slides, Microscope. *See* Microscopes.

Sounding-apparatus, Sea and like. '*84*. 1346. 1603. 13,366. 13,454. '*85*. 2148. 7575. 7890. 8461. 8624. 9969. 12,240. '*86*. 3967. 4888. 12,848. '*87*. 146. 5357. 7122. 7986. 10,527. 15,012. '*88*. 2703. 4272. 6134. 10,287. 12,798. 16,720. 18,924.

Sounds, Locating. '*84*. 8794. '*86*. 13,003. '*88*. 1700. 14,943.

Specific gravity estimating apparatus. '*84*. 11,066. 12,585. 15,970. '*85*. 5589. 12,582. 13,050. '*86*. 1938. 3594. '*87*. 12,963. 14,169. '*88*. 4139. 7411.

Spectacles and eyeglasses. '*81*. 2891, [*Appendix, page* 169]. '*84*. 912. 3879. 4584. 6377. 7461, [*Appendix, page* 170]. 11,710. '*85*. 1027. 3701. 8342. 8953. 9202. 10,415. 10,526. 10,920. 11,207. 12,921. '*86*. 2764. 11,179. 12,148. 14,650. 14,931. 16,464. '*87*. 798. 2020. 2137. 3689. 9202. 9454. 12,337. 15,234. '*88*. 1213. 5652. 6059. 8621. 9315. 10,956. 11,380. 18,404.
- alloys for making frames. *See Abridgment Class* Metals and alloys.
- eye protectors and shades. *See* Protectors and shades, Eye &c.

Specula. *See* Reflectors.

Speed and direction of motion of distant objects, Determining. *See* Telemeters.

Speed indicators. *See* Anemometers; Logs and leeway indicators.

Spirit levels. *See* Levels &c.

Squares, Drawing and like. '*84*. 880. 10,105. 11,469. 14,507. '*85*. 2372. 6260. 8873. 12,668. 12,704. '*86*. 2946. 3290. 12,265. 13,581. 17,061. '*87*. 5913. 6741. '*88*. 1819. 5111. 8599. 9442. 10,447. 11,429.

Stands for instruments. *See* Tripod &c. stands.

Stereopticons. *See* Magic-lanterns &c.

Stereoscopes. '*84*. 12,329. '*86*. 15,000. '*87*. 9814. 11,317. '*88*. 2375. 7067.
- advertising on or in connection with. *See Abridgment Class* Advertising &c.

Stereoscopes—*cont.*
- coin-freed apparatus for displaying stereoscopic views. *See Abridgment Class* Coin-freed apparatus &c.
- tripod and like stands for. *See* Tripod &c. stands.

Straight-edges. *See* Rulers, Drawing and like.

Sun-dials. *See Abridgment Class* Watches &c.

Sunshine-recorders. '*84*. 16,976. '*85*. 9699. '*86*. 949.

Surfaces of materials, Comparing. *See* Colours &c., Comparing and testing.

Surveying-instruments:
- *Excepting* Bearings and courses, Determining &c.; Barometers; Clinometers and other instruments for measuring vertical angles and angular altitudes; Compasses, Magnetic; Gyroscopic apparatus; Levels and plumbing-instruments; Mathematical drawing-instruments; Measures of length, (*measuring-chains*), [*Abridgment Class* Registering &c.]; Odometers, [*Abridgment Class* Registering &c.]; Sextants, quadrants, and the like; Telemeters; Telescopes and opera and field glasses; Theodolites;
  for which see those headings.
- altitudes, linear, measuring. '*86*. 8748. '*88*. 11,809.
- azimuth instruments. *See* measuring horizontal angles *below.*
- contouring and profiling. '*88*. 9520.
- graphical. '*87*. 1082. '*88*. 18,912.
- hydrographical. '*87*. 1884. '*88*. 9520.
- measuring horizontal angles. '*84*. 217, [*page* 1 and *Appendix, page* 170]. '*85*. 3536. 7412. '*86*. 8748. 9936. '*87*. 12,601. '*88*. 9520. 10,263.
- railway and like curves, setting out. '*85*. 325. '*86*. 2527.
- roads and the like, determining inclines and curves of. '*86*. 9936. '*87*. 1082. '*88*. 18,912.
- staves. '*84*. 3510. '*86*. 3172. 8748. '*87*. 12,668.
- testing collimation. '*87*. 6539.
- stands for. *See* Tripod and like stands.

Sympiesometers. *See* Barometers.

Telemeters, [*including* Range-finders]. '*84*. 4303. 13,288. 16,029. '*85*. 1411. 7412. 8043. 9672. 11,415. '*86*. 3172. 4591. 4739. 8748. 8973. 12,404. '*87*. 4710. 11,578. 11,602. 15,951. 17,580. '*88*. 1204. 1794. 5297. 7110. 8381. 9520. 10,203. 10,263. 10,500. 11,133. 11,725. 11,856. 12,222. 13,021. 13,398. 14,818. 14,820. 18,553. 18,815.
- distance indicators attached to projectiles. *See Abridgment Class* Ammunition &c.

Telescopes and opera and field glasses. '*85*. 8222. '*86*. 4375. 9244. 12,148. 14,931. '*87*. 1905. 2493. 3285. 9814. 17,107. '*88*. 4835. 5176. 7399.
- coin-freed cases for hiring. *See Abridgment Class* Coin-freed apparatus &c.

Digitized by Google

Telescopes &c.—*cont.*
range-finders. *See* Telemeters.
tripod and like stands for. *See* Tripod &c. stands.

Temperature, Indicating and registering. *See* Thermometers &c.

Testing colours. *See* Colours &c., Comparing &c.

Testing sight. *See* Sight-testing apparatus.

Textures of materials, Comparing. *See* Colours &c., Comparing &c.

Theodolites. '*85*. 325. '*88*. 9520. 14,818.
tripod and like stands for. *See* Tripod &c. stands.

Thermographs. *See* Thermometers &c.

Thermometers and pyrometers. '*81*. 5233, [*Appendix, page* 170]. '*84*. 1138. 2200. 3750. 4132. 6093. 8670. 9116. 9393. 10,140. 10,231. 11,179. 15,947. 16,621. 16,940. '*85*. 303. 1045. 2027. 2568. 4769. 4815. 5671. 7147. 7153. 9028. 9115. 10,805. 11,211. 11,898. 11,968. 12,427. 12,582. 12,716. 13,006. 14,406. 15,843. '*86*. 737. 949. 2520. 3023. 3136. 3155. 7289. 7752. 8189. 9385. 10,816. 11,041. 12,489. 14,204. 14,555. 15,842. 16,414. '*87*. 1770. 2345. 2790. 3089. 3827. 4135. 8013. 9801. 11,320. 11,808. 14,509. 15,513. 15,844. 17,743. '*88*. 640. 2309. 2673. 2951. 4212. 5312. 5690. 7357. 7884. 8027. 10,414. 13,005. 14,683. 14,901. 16,457. 18,752.
glass, making. *See Abridgment Class* Glass.

Thermoscopes. *See* Thermometers &c.

Topophones. *See* Sounds, Locating.

Tripod and like stands, [*including* Telescopic and other adjustable pedestals and standards]. '*84*. 1814. 3232. 3510. 5509. 5647. 12,855. 15,198. '*85*. 976. 2181. 5677. 8748. 11,959. 12,425. 14,205. '*86*. 899. 2039. 2423. 2495. 5636. 6936. 8866. 9970. 11,175. 13,620. 15,697. '*87*. 4270. 4710. 6459. 6780. 8998. 10,841. '*88*. 907. 3196. 3782. 5770. 7476. 9501. 9518. 10,368. 10,860. 11,257. 11,360. 13,868. 14,801. 17,656.
Excepting Lamps and burners for lighting &c., (*pedestals*), [*Abridgment Class* Lamps &c.]; Reading-desks and music stands, [*Abridgment Class* Furniture &c.]; Stands, Card, photograph, and like, [*Abridgment Class* Furniture &c.];
for which see those headings.
camera stands, attachments for. *See Abridgment Class* Photography.
velocipedes adapted for carrying. *See Abridgment Class* Velocipedes.

T-squares. *See* Squares, Drawing &c.

Urinometers. *See* Specific gravity estimating apparatus.

Vanes, Wind. *See* Wind vanes.

Weather glasses. *See* Barometers.

Weather indicators. '*84*. 3881. 13,044. '*87*. 6907. 18,026. '*88*. 11,809.

Wind gauges or anemometers. *See* Anemometers.

Wind vanes. '*85*. 3656. 14,855. '*87*. 5991. '*88*. 3412.
anemometers or wind gauges. *See* Anemometers.

Digitized by Google

NAME INDEX.

The names in *italics* are those of persons by whom inventions have been communicated to the applicants for Letters Patent.

Abbott, L. ....'84. 5803
Abel, C. D...'85. 8335. '87. 4545
'88. 3017
Ablett, T. R.....'85. 1246
Abraham, A.....'87. 798
Ackerley, J. .....'85. 7575
Adams, F. E.....'85. 3990
„ W. P.....'88. 16,785
Aflalo, M. .....'87. 10,502
Aguettant, B. L. .....'87. 11,362
Albert & Otto. .....'87. 1905
Aldous, H. G.....'86. 14,204
Allison, H. J. ...'85. 6399. 6688
Amour, J. H. .....'87. 14,741
Anders, G. L.....'85. 13,269
Andrews, H. .....'87. 17,580
Appleton, L. .....'84. 74
Armstrong, A. W. ...'88. 17,326
Arnold, J. .....'88. 5690
Ashford, J. .....'84. 15,198
'85. 14,205

Bach, C. .....'88. 2375
Bagshaw, W. .....'87. 17,962
Bahlsen, E.....'87. 18,026
Bailey, M. .....'87. 7986
Baker, F. R. .....'88. 10,860
„ T. J.....'84. 16,940
Balch, W. .....'84. 1603
Barber, F. .....'86. 10,411
„ W.....'87. 5991
Barczinsky, B. A. .....'84. 880
Bard, Mabie, Todd &...'86. 8189
Bardtholdt, J.....'87. 6730
Barnard, E.....'86. 15,786
„ G. A. .....'85. 6260
Barr, A. .....'88. 9520
„ F. .....'88. 907
Barrett, H. .....'87. 15,223
Barrodale, T. H. .....'88. 5111
Barry, J. H. .....'84. 3881
Barton, W.....'88. 7110
Bassnett, T. .....'88. 9926
Batty, W.....'84. 13,547
Bayley, T. .....'84. 14,699
Baynes, W. M. .....'87. 18,001
Beanland, J. R.....'88. 14,253
Beard, R. R. .....'86. 7344
Beauchamp, F. .....'88. 16,046
Bechtold, A. M. .....'88. 8621
Beck, F. W. .....'87. 5235
„ W. H.....'85. 325
'87. 3689
Becker, M. I. .....'87. 9520
Beilby, G. T. ...'84. 3750. 6093
Bennett, J. F. .....'84. 9876
'88. 5440
Benoist et L. Berthiot, Soc. F.
'87. 3689
Benson & Co., W. A. S.
'88. 9501
Benson, C. A.....'88. 18,553
„ W. A. S.....'88. 9501
Berg, C. F. E.....'85. 13,334
Berger, J. H.....'88. 4163
Berlingieri, E......'85. 15,537
Berly, J. A.....'85. 14,289
Berry, J. L.....'87. 10,841
Berthiot, Soc. F. Benoist et L.
'87. 3689
Besson, H. '84. 7461, [*Appendix, page* 170]. '86. 12,148
Biggs, F. J.....'87. 2493
Binter, G. .....'85. 9028
Birkbeck, H. .....'88. 3412
Bisson, E. .....'86. 1038
Blaënsdorf, R......'88. 10,956
Blakesley, T. H.....'88. 3021
Blakey, J.....'86. 2946. 7664
Bliss & Co., J......'85. 14,757
Bliss, G. H......'85. 14,757
„ *J.*.....'85. 14,757
Bloor, T. .....'87. 12,337
Boehle, H. .....'84. 12,382
Bogle, J.....'85. 9699
Bolton, T. .....'84. 13,288
'88. 10,500
Boorman, J. A. .....'87. 13,313
Bos, M. G. van den ...'84. 8394
Bosshardt, F.....'87. 6383
Boswell, H. St. G. ...'85. 14,406
Boult, A. J.....'84. 11,710
'85. 2181. 8807. '87. 9801
12,964.
Bourne, H. B.....'84. 9116
„ H. R. F. .....'84. 9116
Boyer, J.....'87. 1581
Boyhan, P. .....'84. 960
Bradley, R.....'87. 15,234
Brayton, J. T......'84. 1138
Bréguet, Soc. Anon. Maison.
'84. 15,951
Briggs, D. W......'86. 13,581
Briggs, J. A. .....'84. 1346
Brodie, G. G. .....'88. 16,457
Bromley, J.....'86. 12,125
Brookes, A. G. .....'85. 4769
Brough, R. .....'85. 12,716
Broughton, V. L. D. ...'88. 362
Brown & Co., W. H....'88. 9518
Brown, E. H.....'85. 9772
„ J. .....'86. 6936
Brownlow, W. H. ...'88. 18,404
Bruce, E. S.....'86. 15,192
„ T. W. .....'84. 3852
Brust, C. .....'85. 12,921
Bruster, J. .....'86. 1980
Budenberg, Schaeffer &. .....'88. 18,324
Burns, W.....'86. 14,931
Burr, E. B.....'87. 3419
Butler, A. E. .....'86. 2130
„ H. M.....'86. 2130

Calderara, A. J.....'86. 3594
„ S. A.....'86. 3594

Digitized by Google

Callendar, H. L.....'87. 14,509
Calley, S. .....'84. 8393
Calliburcès, P.....'84. 13,044
Capazza, L......'85. 325
Capito, C. A. A.....'87. 7469
Cardwell, W. A.....'87. 17,107
'88. 5176
Carr, L.....'88. 11,809
Carroll, D......'84. 5571
Carter, W.....'84. 11,128
'85. 8551
Cartwright, W. .....'86. 16,464
Caulfeild, F. St. G. ....'87. 6539
Caws, F. .....'88. 11,133
Chadburn, W. .....'86. 807
Chadwick, W. .....'85. 12,582
Chamberlin, F. .....'87. 10,527
Chamberlin, H. .....'87. 10,527.
Chase, H. A. .....'88. 9293
Christensen, H. O.....'84. 1101
Christian, T. G. R......'85. 3777
Christie, W. H. M...'86. 12,404
Clark, A. M.....'84. 4303. 5509
5571. 9461. 10,105. '85.
1411. 2350. '86. 13,581. '87.
1082.
„ W. R. .....'85. 7153
Clarke, C. L......'85. 11,898
Claud-Mantle, J. G....'86. 8984
Coad, T. .....'88. 7695
Coles, W. J. .....'87. 4804
Colton, E. G. .....'85. 10,920
Comitti, L. .....'88. 16,538
Cook, G. .....'87. 17,503
„ H. W. .....'87. 14,424
Cooke, C. F. .....'84. 12,175
„ T.....'84. 12,175
Cooper, A. J. .....'84. 13,454
'85. 8461. '87. 7122. '88.
4272. 16,720.
„ T. .....'86. 5139
„ W. C.....'88. 7105
Corsham, R. .....'87. 5900
Cory, G. E. .....'84. 880
Couland, N......'85. 14,289
Coulson, J.....'88. 13,176
Courlander, L. .....'86. 11,631
Cox, J.....'85. 10,415
„ J. B. .....'84. 10,231
Crampton, P. J. R...'87. 14,216
„ T. P. C. ...'88. 7357
Crane, F.....'88. 1635
Crawford, D.....'87. 5913
Crocker, S. H. .....'84. 3985
Cross, A. K. .....'87. 8998
Crossley, E..... ..'86. 8866
Culbertson, H......'86. 14,523
Cumming, W. S. .....'87. 5913
Curry, Pickard &.....'88. 6059
Curry, W...'85. 8953. '88. 6059

Dale, H. F...'87. 9900. '88. 2951
Dalrymple-Hay, H. H. '86. 2527
Dalton, W. H. .....'84. 3985
Daniel, J. .....'85. 10,366
Dany & Lepage.....'84. 4303
Darwin, L. .....'88. 14,820
Davis & Co., J. .....'87. 1324
Davis, A. .....'84. 13,182
„ H. .....'84. 13,182
Dawes, B. M.....'85. 7360
Dawson, A. G. .....'85. 3990
Day, J.....'86. 16,464
Deans, J. W. .....'87. 6780
'88. 11,257
Decoudun, J. .....'87. 13,332
'88. 11,578
Defries, H.....'86. 9798
„ W. .....'88. 435
Derckmann, C. .....'85. 7147
Derham, T.....'86. 1938
Dessendier, J. E. ....'86. 14,548
Dickman, G. .....'86. 8189
Dillon, J. .....'85. 9969
Dines, W. H.....'86. 1345
Dixon, S.....'88. 5652
Dobbie, J. C.....'87. 14,783
Dobbie, J. G. .....'87. 6280
Dobie, T.....'87. 6280
Doehring, W.....'86. 3136
Dollond, A. W. .....'85. 11,959
'86. 13,620
Dougherty, B. A. ...'88. 14,901
Douglas-Hamilton, A. H. ...'87.
9814
Downing, G. .....'84. 14,060
„ J. S. .....'85. 4785
Draper, D. .....'87. 11,808
'88. 5312
Dredge, W. .....'85. 7412
Drivet, H......'86. 12,176
Dudding, W. .....'84. 10,112
Duncan, W. H. .....'84. 934
'85. 14,669
Dürr, W.....'88. 12,963

Edwards, B. J. .....'84. 10,226
„ E. .....'88. 2375
„ G.....'84. 11,469
Elliot, J. M. .....'87. 13,186
Engelhard, L. .....'87. 2249
Erdmann, A. .....'88. 16,070
Eskell, C. A. .....'86. 2495
Espenschied, C. .....'85. 6399
Evelyn, G. P.....'85. 1964
'86. 9844
Eyre, G. E. B.....'87. 10,744

Falkner, V. .....'84. 6842
Falter, G.....'86. 11,220
„ J.....'86. 11,220
Farquharson, W. .....'86. 8748
'88. 11,856
Farr, G. C. .....'88. 7987
Farrell, W. T. .....'87. 1364
Faucette, J. B. .....'88. 11,725
Favi, Paride, & Co. ...'85. 2350
Fawcett, S. .....'88. 11,429
Fay, C. P. .....'85. 6688
Faymonville, B.....'85. 12,181
Feltre, C. M. M. de Goyon, Duc
de .....'88. 1700. 14,943
Ferguson, F. O. .....'86. 700
'87. 3161. '88. 2152
Ferranti, S. Z. de .....'84. 4584
Ferry, J. B. .....'86. 6848
Fessart, E. Vaquez-. ...'85. 8335
Fischer, J. M......'87. 9801
Fiske, B. A......'88. 18,815
Fletcher, H. L. .....'88. 11,725
„ J. .....'88. 7596
Foord, P. .....'87. 5991
Foster, A. M. .....'88. 11,257
„ W. H. W. ...'87. 14,868
Fournet, A. M. A.....'85. 8870
Fox, I......'84. 6377
Franck-Valery, E....'85. 11,207
„ P. ....'85. 11,207
Frank, L. .....'84. 11,710
Frankenberg, E. .....'87. 2836
Frawley, J. J. .....'87. 798
Free, R. .....'88. 14,683
Freeman, D. .....'84. 8248
Frew, J.....'85. 2568
Fric, J.....'85. 11,985
Fuhrmann, A.....'88. 7067
Füidge, L. V. .....'84. 14,457
Fuller, H. F. .....'88. 5688
Fyfer, J. T. .....'88. 9315

Galland-Mason, R. .....'84. 912
'85. 1027. 3701
Game, J. A.....'87. 10,502
Gare, T. .....'86. 14,899
Gauntlett, W. H. .....'85. 5671
Gautier, A. .....'85. 15,938
Genex, D......'84. 5086
Gibbons, G. B. A. ...'87. 15,907
Gibbs, J. M. .....'86. 1980
Gillie, J. W. .....'86. 7077
Gilmore, J.....'85. 7153
Gire & Co. .....'87. 17,743
Golding, W.....'85. 11,990
Goldsmith, E. M. ...'86. 17,061
Goodrich, A. S.....'87. 9487
Gordon, A. McC.....'84. 641,
[*Appendix, page* 170]
„ J. '86. 8920. '87. 8600
Goyon, C. M. M. de, Duc de
Feltre.....'88. 1700. 14,943
Grace, G. P. .....'85. 4582
Grant, J. G.....'85. 11,415
Granville, W. P.....'88. 12,242
Gray, C. .....'84. 15,440
Green, B.....'88. 16,090
„ C.....'84. 14,457

Digitized by Google

Green, T. ..... '88. 16,695
„ W. ..... '84. 6181
Griffin, F. ..... '86. 14,811
Grindley, W. H. ..... '88. 13,005
Gross, A. ..... '88. 6076
Groth, L. A. ..... '85. 12,668
Guarracino, H. ..... '87. 17,227
Guinness, L. H. ..... '86. 3155

Haddan, H. J. ..... '84. 5369
'87. 17,227
Haddow, A. ..... '85. 9115
Hahn, A. F. ..... '87. 6383
Haight, H. J. ..... '87. 4135
Hall, B. G. ..... '88. 7124
„ F. J. ..... '87. 16,598
Halske, Siemens & ..... '87. 4545
Hamilton, A. H. Douglas-... '87. 9814
Händel, R. ..... '88. 13,664
Hannay, J. B. ..... '85. 2148
Harcourt, A. G. V... '87. 11,985
Hardy Bros. ..... '88. 15,728
Hardy, J. J. ..... '88. 15,728
„ W. ..... '88. 15,728
Harger, J. V. ..... '85. 15,199
„ T. ..... '85. 15,199
Hargrave, F. ..... '88. 2703
Harild, H. ..... '84. 13,964
Harling, W. H. ... '86. 11,802
Harrington, J. W.... '86. 13,436
Harris, F. ..... '85. 6064
„ H. F. ..... '86. 8230
„ R. E. ..... '86. 8230
Harrison, J. ..... '88. 15,505
„ N. ..... '87. 1884
Hart, F. W. ..... '84. 1814
Hartmann, G. ..... '87. 11,320
Harvey, G. C. ..... '84. 10,075
Haskett-Smith, E. L. W. ... '88. 13,021
Havill, G. ..... '88. 6383
Hay, H. H. Dalrymple- ..... '86. 2527
Hayes, H. E. ..... '84. 5509
Haynes, J. W. ..... '84. 377
Hazard, H. T. ..... '84. 17,031
Heale, M. ..... '85. 10,690
Heath, C. ..... '87. 2020
„ G. W. ..... '86. 16,202
'87. 11,964
Heffer, H. C. ..... '87. 11,602
'88. 1204
Heidler, J. ..... '88. 10,263
Hempel, W. ..... '85. 1045
Henninger, F. A. ..... '88. 9315
Hensley, W. S. ..... '88. 13,005
Herrmann, I. ..... '84. 12,046
Hetterich, O. ..... '87. 1905
Heys, W. E. ..... '88. 18,324
Hicks, J. J... '84. 2200. '85. 2027 '86. 2967. 14,555. '87. 10,595 14,169. '88. 4139. 4212 10,414.
Higgins, C. M. ..... '88. 4405
Hill, C. F. ..... '85. 12,970
Himly, M. ..... '87. 6730
Hinks, J. ..... '88. 17,656
Hinton, E. ..... '88. 9501
Hoffmann, C. G. ..... '86. 12,489
Holden, H. ..... '88. 10,287
Holman, H. F. ..... '87. 11,578
Hook, H. ..... '88. 17,007
Hooker, J. ..... '85. 8624
Horn, A. ..... '88. 7411
Horne, W. C. ..... '85. 321
Horstmann, H. ..... '88. 9452
Howe, A. C. E. ..... '87. 5991
Hughes, G. ..... '87. 17,743
„ W. C. ..... '84. 13,371 13,372. '86. 8076. 9383 9469. '88. 4545. 7348.
Hulse, W. W. ..... '86. 6337
Hult, O. ..... '84. 11,284
Humphreys, W. J. B... '88. 2951
Husband, J. ..... '84. 10,140
Hyams, S. ..... '88. 4668

Immisch, M. ..... '86. 7289
Imray, J. ..... '86. 2764
Inkpen, G. C. ..... '88. 14,801

Jackson, L. C. ..... '87. 627
James, S. H. ..... '88. 6134
Jensen, P. ..... '84. 11,284
Job, H. ..... '85. 7659
Johnson, G. L. ..... '85. 9202
„ J. Y. ..... '85. 12,427
„ W. D. ..... '87. 6459
Joly, J. ..... '86. 12,848
Jones, J. G. ..... '86. 3967
Jordan, J. B. ..... '84. 16,976
Joseph, I. ..... '87. 1324
Justice, P. M. ..... '84. 960

Keith, W. C. ..... '84. 5921
Kellett, J. ..... '85. 8873
Kemp, H. ..... '84. 15,440
Kendall, P. F. ..... '87. 5470
Kent, E. N. ..... '84. 7461, [*Appendix, page* 170]
Key, J. T. ..... '86. 6431
Kilgour, G. ..... '88. 14,818
King, H. J. H. ..... '85. 13,006
Kingdon, Z. H. ..... '86. 15,873
Kinley, W. ..... '85. 2372
Kirk, H. C. ..... '84. 1138
Klif, J. ..... '87. 6741
Korolanyi, A. ..... '88. 1635
Korshunoff, N. ..... '84. 3879
Kotliarewski, P. ..... '88. 3017

La Cour, P. ..... '88. 7399
Laidler, T. ..... '86. 10,068
„ W. H. ..... '86. 10,068
Lake, H. H. '84. 6377. '85. 9857 15,537. '86. 4591. 12,176 '87. 1926. 11,362. '88. 17,854. 18,815.
„ W. R. '81. 5233, [*Appendix, page* 170]. '84. 5086 5803.
Lamers, J. ..... '84. 6375
Lancaster, E. B. ..... '88. 18,438
„ W. J. ..... '86. 5677
Lanchester, F. W.... '88. 16,432
Landon, E. I. ..... '87. 3827
Landon, H. R. ..... '87. 3827
Lansdell, W. J. ..... '88. 9442
Laws, R. W. ..... '88. 10,368
Lazarus, N. ..... '85. 4354
Lea, J. ..... '84. 10,075
Lebret, A. E. ..... '87. 6907
Lee, D. T. ..... '86. 15,697
Leggott, W. ..... '86. 737
Leigh, H. H. ..... '88. 7399
Leighton, J. L. ..... '88. 1213
„ J. T. ..... '86. 11,179
Leiser, F. ..... '87. 6730
Lepage, Dany & ..... '84. 4303
Le Patourel, J. ..... '88. 4668
Leportier, T. ..... '87. 12,601
Le Prince, L. A. A. ..... '88. 423
Levetus, H. ..... '86. 14,960
Lilley, G. C. ..... '86. 8334 '88. 12,296. 18,019
Lindley, C. ..... '85. 15,843
Liska, F. ..... '87. 12,964
Livrelli, P. ..... '85. 325
Livsey, J. E. ..... '88. 15,505
Loeb, B. ..... '87. 4614
Lorrain, J. G. ..... '85. 4815 '88. 2924. 18,752
Lovibond, J. W. ..... '86. 12,867 '87. 3859. '88. 3657
Lovegrove, J. ..... '88. 9501
Lowdon, E. J. B. ..... '86. 8920
Lowthime, D. A. ..... '88. 8726
Lubin, S. ..... '87. 798
Lucas, E. ..... '88. 1819
„ F. R. ..... '87. 15,012
„ H. ..... '86. 2039
Lux, F... '84. 15,970. '85. 13,050
Lyall, E. ..... '87. 12,668
Lynam, P. J... '88. 8381. 10,203
Lyons, J. ..... '84. 12,329
Lysaght, G. J. ..... '88. 7476

Mabie, Todd, & Bard.. '86. 8189
McArthy, D. ..... '87. 2345
Macdonald, J. ..... '84. 6994
McEwen, C. J. ..... '87. 15,907

Digitized by Google

McFarlane, J......'84. 10,105
McGregor, D.....'84. 1397
Mackay, R. F.....'84. 13,313
McKellen, S. D. .....'86. 899
Mackenzie, C.....'88. 11,380
„ H. L. .....'86. 9936
Mackle, J. O'N. .....'84. 12,585
MacLellan, J. A. .....'88. 5297
Mainwaring, W. F. B. Massey-'86. 5794
Mallett, J. R. M. ...'85. 10,733
Mallock, H. R. A.....'85. 8043
Manger, J. .....'85. 7480
Mann, W. G. .....'88. 5440
Mantle, J. G. Claud-...'86. 8984
Marks, P. S. .....'84. 5443
Marle, H.....'85. 12,704
Marsden, S.....'86. 9970
Martin, E. .....'86. 6275
Mason, R. Galland-. ....'84. 912 '85. 1027. 3701
Mason, Short &.....'88. 2526
„ W. F.....'87. 2790
„ W. J.....'88. 2526
Massey, J. E. .....'84. 13,366
Massey-Mainwaring, W. F. B. '86. 5794
Matern, B. von. .....'87. 15,951
Mattison, L. H......'88. 3412
Maurice, A. H. .....'88. 11,809
Mavitta, W. .....'88. 9518
Mayer, J.....'84. 8670
Mayer, J......'85. 1411
Meager, R. .....'84. 11,962
Megson, H. .....'84. 10,112
Methven, J. .....'88. 6923
Meyer, O. .....'84. 7373
Michel, J. .....'87. 7132
Michell, F. B.....'84. 14,286
Middelboe, C. G......'84. 16,029
Mileson, H. G. .....'87. 10,712
Millar, G. A. .....'87. 2137
Milligan, J. W.....'86. 4449
Mills, B. J. B. .....'84. 6994
Mitchell, A.....'85. 11,213
„ C. T. .. ..'88. 8027
Moennich, P. .....'86. 11,041
Moëssard, P. .....'84. 9461
Molnar, P. .....'88. 10,951
Moore, F. M ....'84. 3196. 6288
„ J. J. .....'87. 9487
Mora, F. A. .....'84. 5369
Mudford, F. J. .....'85. 15,843
Müller, W.....'85. 7147
Munro, F. W.....'86. 12,265
Murphy, P. J.....'88. 18,924
Murrie, J.....'84. 9393. 15,947 16,621. '85. 303. 10,805 '86. 3023. '87. 1770.
Musgrave, S. .....'85. 5589
Myers, L.....'84. 13,220

Nevill, P.....'85. 3536
Newton, H. C.....'84. 14,951 '88. 16,556
Newton, H. E.....'85. 14,757
Nicholson, A. .....'85. 12,425
Nievsky, L.....'88. 2951
Noakes, D. W. .....'86. 6154
Nordenfelt, T.....'84. 16,029 '85. 9672. '87. 15,951
Normanville, S. A. de. .....'86. 3625
North, C. G. .....'88. 18,542
Norton, J. A.....'87. 17,580
„ T. .....'88. 10,860
Nowack, J. F.... ...'87. 18,026

Ogden, T. D. .....'87. 4768
Oliver, W. S. .....'87. 11,621
Olson, A. G......'84. 10,105
O'Reilly, W. P. .....'86. 15,187
Otto, Albert &.....'87. 1905
Owen, D.....'88. 11,809

Paget, F. A. .....'85. 9849
Palmer, W. .....'88. 8599
Paride, & Co., Favi....'85. 2350
Parker, J. .....'86. 15,697
„ T. .....'84. 11,066
Parkes, W. .....'88. 10,447
Parkinson, C. F..... .'88. 11,429
„ J. .....'88. 11,429
Parr, B. .....'85. 7575
Parsy, L. .....'88. 18,150
Pass, E. de.....'87. 8013
Paxton, G.....'88. 6059
Pearce, E. H. .....'86. 12,148
Pearsall, W. B. .....'88. 11,360
Peichl, J. von.....'88. 10,101
Pereles, F......'87. 12,964
Perken, E. .....'88. 18,542
„ F. L.....'88. 18,542
Perken, Son, & Rayment ...'88. 18,542
Phalp, O.....'88. 16,468
Phelps, R.....'79. 2891, [*Appendix, page* 169]
Phillips, A.....'86. 1353
Phillipsbourne, C. ...'87. 15,844
Pickard & Curry. .....'88. 6059
Pickard, J. F.....'85. 8953
Pierce, H. J. .....'88. 14,683
Piffard, B. .....'84. 202
Pillischer, J. .....'85. 10,526
Pincoffs, M......'88. 1635
Pirard, A. .....'84. 3232
Pitt, S. .....'84. 8394
Plant, H. G. .....'85. 8342
Plumb, R. H. T. .....'85. 7270
Pocock, S. J. .....'85. 11,968
Pope, D.....'84. 6723
Popplewell, W. W...'86. 16,414 '88. 8621

Potter, E. T. .....'88. 14,171
„ R. .....'88. 1789
Potts, J. .....'86. 15,842
Pound, H. .....'87. 5465
Powell, F. W.....'88. 12,153
Pozzy, S. .....'85. 15,938
Pratt, W. T. C. .....'85. 665
Preece, W. H.....'84. 6312
Price, C. W. .....'87. 5900
Priestley, G. F. .....'88. 11,539
Prior, J. D.....'88. 16,457
Prowse, G. R......'86. 10,411
Prytz, P. K. .....'87. 7469
Puigsech, J. T. y. ...'85. 12,668
Pumphrey, A. .....'85. 976
„ C.....'86. 5636

Rae, C. S.....'88. 16,992
Ramsden, J. W.....'88. 3196 13,868
Rawlings, J. P. .....'85. 3162
Raworth, J. S. .....'85. 7996
Rayment, A. .....'86. 2423 '88. 18,542
Rayment, Perken, Son, &....'88. 18,542
Read, W. .....'86. 14,650
Ready, A. J. .....'87. 8754
Reddie, A. W. L.....'84. 15,951 '85. 8748
Redfern, G. F. .....'86. 5996
Reed, A. H. .....'85. 3777
Reeves, E. A. .....'88. 13,893
Reid, J.....'87. 11,032
Reizenstein, E. .....'86. 17,061
Revueltas, J. N.....'88. 12,798
Reynolds & Son.....'87. 6489 '88. 483
Reynolds, A. W.....'87. 6489 '88. 483
„ F. S.....'87. 6489 '88. 483
„ W. J.....'87. 8714 12,880. '88. 10,053. 16,663 17,711.
Rhodes, C. .....'85. 11,151
Richard Bros. .....'85. 12,427
Richard, F.....'88. 2309
„ J.....'88. 2309
Richardson, H. .....'87. 3827
„ J. .....'85. 7175
Richardson, J......'87. 3827
Rickard, P.....'85. 5073
Riley, W. J.....'86. 11,175
Ripamonti, L. .....'86. 12,176
Robson, M. H. .....'85. 1594
Rogers, F. M.....'85. 3656
Rohrbach, C. E. M. ...'86. 4375
Rood, R.....'87. 7914
Rothwell, W. G.....'84. 2510
Rougeot, P......'87. 8013
Rouse, J. H. .....'87. 4270
Rung, G. A.....'87. 7469

Digitized by Google

Säfärik, V. ..... '85. 8222
Salsbury, H. ..... '86. 849
Salt, T. P. .... '88. 4212
Sarjeant, W. L. ..... '86. 4624
Sax, J. ..... '85. 14,855
Schaeffer & Budenberg..... '88. 18,324
Schoening, H. ..... '85. 7890
Schlotfeldt, H. W.... '85. 11,336
Schmidt, W. ..... '85. 7752
Schneider, K. ..... '86. 4591
Schröder, H. L. H. ... '88. 4835 5194
Scott, A. T. H. ..... '84. 3666
Scott, J. H. ..... '84. 6377
Scott, L. K..... '85. 15,133
„ P. ..... '84. 3666
Scott, P..... '88. 10,299
Sergeant, H. C. ..... '85. 8748
Sharp, H. B. ..... '84. 3510
Shepheard, G. ..... '87. 11,578
Shettle, J. ..... '87. 6377
Short & Mason ..... '88. 2526
Short, T. W. ..... '88. 2526
Shrader, J. C..... '84. 11,698
Siegert, A. ..... '88. 12,963
Siemens & Halske ..... '87. 4545
Silveira, F. A. da..... '87. 3089
Silversides, J..... '84. 10,112
Simpson, W. S... '86. 15,000. '87. 11,317. 11,621. '88. 8068
Sinclair, J..... '88. 640
Sirieix, L..... '87. 15,591
Sleator, R. L. ..... '84. 14,060
Smith, B. B. ..... '84. 9876
„ C. '84. 12,991. '85. 4086 '88. 10,956
„ C. G. ..... '86. 4433
„ E. L. W. Haskett- ... '88. 13,021
„ G. ... '86. 807. '87. 5357
„ T..... '88. 1423. 15,664
„ W. T..... '85. 4086
Soc. Anon. Maison Bréguet... '84. 15,951
Soc. F. Benoist et L. Berthiot '87. 3689
Somerville, J..... '88. 12,186
Son, C. R. van..... '88. 12,222
Spencer, L..... '88. 5440
Spencer, R. L..... '87. 1926
Sperry, C..... '87. 15,251
Spink, W..... '84. 14,862
Sporton, H. H. ..... '86. 1991
Spottiswoode, W. H... '87. 10,744
Squire, W. ..... '88. 14,253
Stang, H. G. J. ..... '86. 5996
Stanley, W. F. ..... '85. 4530 '86. 4624. 5407. '87. 8985 9454.
Stebbing, J..... '87. 4100
Stevens, H..... '87. 1346
„ J..... '88. 2218
Steward, J. H. ..... '85. 7412 '87. 14,171
Stromeyer, E. C ..... '84. 11,179
Stroud, W..... '88. 9520
Stuart, C. W. ..... '85. 8807
Stuart, G. ..... '87. 3285
„ J..... '88. 4835. 5194
Sudmann, J..... '87. 15,513
Sutton, S. H. ..... '86. 14,891
Swan, C. F..... '85. 8653
Swift, J.... '84. 12,952. '86. 2622 '88. 13,258

Taylor, C. W...... '87. 9202
Taylor, F. ..... '88. 3782
„ H. D..... '85. 3755
Thackeray, W. T. W... '87. 3827
Thomas, A..... '84. 3771
„ H. E..... '84. 11,698
Thompson, T. H. ..... '88. 5770
„ W. P. ... '84. 17,031 '85. 11,898. '86. 14,523. '87. 6907. 9202. 11,808. '88. 5312.
Thomson, J. '84. 5647. '86. 2520
„ Sir W..... '85. 12,240
Thorne, J. ..... '87. 3419
Thorp, T. ..... '84. 9931
Thropp, J. ..... '85. 12,278
Tight, C..... '86. 2967
Todd, & Bard, Mabie '86. 8189
Tinne, T. F. S..... '84. 14,507
Tomkins, S. L. ..... '85. 4858
Tomlinson, E. ..... '84. 9464
Torre, F. D. ..... '84. 8794 '86. 13,003
Tourtin, E. ..... '88. 18,150
Tower, B..... '86. 14,208, [*Appendix, page* 171]
Townshend, E. ..... '88. 5770
Trapp, E. A. ..... '88. 15,428
Trotter, A. P..... '84. 6312 '88. 7884
Trueb, J. ..... '86. 16,414
Turner, J. ..... '86. 12,965
Turnor, M. ..... '85. 914
Twigg, G. H. ..... '88. 11,869

Unge, W. T. ..... '87. 4710
Upton, E. W...... '85. 4769
Utting, M. W..... '86. 6642 '88. 15,736
Uysdal, R. Ritter von Walcher- '85. 9857

Valery, E. Franck-... '85. 11,207
„ P. Franck ... '85. 11,207
Vaquez-Fessart, E..... '85. 8335
Vaughan, J..... '84. 12,088
Vermelvren, N..... '88. 17,854
Verner, W. W. C. ..... '87. 4198
Vetch, G. A. ..... '86. 3172
Vigil, P. ..... '88. 12,798
Villepigue, A. E. D. F. de ... '87. 1082
Villepigue, A. E. D. F. de... '88. 18,912

Wagner, A...... '85. 10,920
Waite, F. W. ..... '85. 12,437
„ J..... '85. 12,437
„ T. C. ..... '85. 12,437
Wakeman, C. ..... '88. 10,447
Walcher-Uysdal, R. Ritter von '85. 9857
Walford, N. L. ..... '86. 8973
Walker, H. C..... '87. 11,602 '88. 1204
„ T. F..... '84. 6369
Wallace, N. W. ..... '88. 10,299
Wallich, G. C..... '84. 7639
Walters, W. M. '87. 3018. 7182
Walters, W. M. ..... '87. 11,964
Walz, A. ..... '85. 11,211
Ward, P..... '86. 9385
Warner, J. S. ..... '88. 18,404
, W. R..... '84. 14,405
Warren, C. H... ..... '86. 4433
„ E. ..... '86. 4433
Washington, S. ..... '86. 3805
Watkin, H. S. S. '84. 217, [*page* 1 and *Appendix, page* 170]. '86. 3425. 14,730. '88. 1794 15,472.
Watson, T. P. '84. 1138. '88. 907
„ W..... '85. 18
Watts, A. J..... '88. 11,360
„ W..... '84. 12,855
Webber, B. K. ..... '86. 3290
Weekes, C. ..... '87. 146
Weeksler, B. ..... '87. 9520
Weissenborn, E...... '86. 4449
Weldon, F. '86. 4739. '88. 13,398
Westbrook, C. S..... '85. 2181
Whieldon, W. ..... '84. 377
Whitaker, R..... '84. 926
White, A. W. ..... '88. 15,472
„ J. E..... '86. 10,816
Whitefield, H. M. ..... '86. 3805
Whiting, M. ..... '85. 3598
Whitten, J. S..... '85. 8342
Wiborgh, J. G. ..... '88. 2673
Wigzell, E. E..... '84. 13,454 '85. 8461. '87. 7122. '88. 4272. 16,720.
Wilding, S. P..... '85. 7890
Wilke, C. F. F. ..... '86. 6353
Wilkinson, A..... '84. 11,603
Williams, J. A. ..... '84. 12,088
Williams, J. S... '81. 5233, [*Appendix, page* 170]
Willis, G. R..... '84. 11,279
Willmore, C. H..... '88. 10,950
Wilson, W. E. ..... '86. 949
Winstanley, D..... '84. 16,054

Digitized by Google

Wolski, F. R. de .....'86. 4888
Wood, C. H. .....'84. 4132
„ F. H. .....'84. 1539
„ J. .....'88. 13,310
„ J. J.....'86. 7820
„ W. C. .....'85. 8870
Woodbury, W. B. .....'84. 5164
Woolfert, A. .....'87. 1905
Wrench, A.....'86. 2459
'87. 14,809
Wrench & Son, J.....'86. 2459
Wright, C. F.....'85. 3221
Wright, L. .....'84. 14,951
„ T. .....'84. 9793
Yeates, S. M. .....'86. 9244
Young, J.....'85. 7175

Digitized by Google

ERRATUM.

In abridgment No. **217**, A.D. **1884**, *page* 1, for *Altazimuths* read *Clinometers; surveying-instruments; compasses, magnetic.*

Digitized by Google

PHILOSOPHICAL INSTRUMENTS,

including OPTICAL, NAUTICAL, SURVEYING, MATHEMATICAL,

and METEOROLOGICAL INSTRUMENTS].

Patents have been granted in all cases, unless otherwise stated. Drawings accompany the Specification where the abridgment is illustrated and also where the words *Drawings to Specification* follow the date.

A.D. 1884.

74. Appleton, L. Jan. 1.

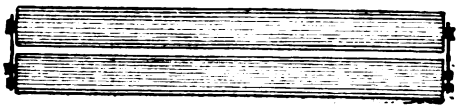

Rulers.—The object is to rule lines without blotting or making ink stains. Two rulers are coupled together at their ends in such a manner that the upper one, which guides the pen, is fixed, while the lower one is allowed to revolve easily.

---

202. Piffard, B. Jan. 1.

Microscope slides.—The slides are made with a recess in the strip *a*, and the cover *b* fits into it exactly, so as to come flush with the surface of the slide. Box slides are made in the same way by dishing the bottom of the recess.

---

217. Watkin, H. S. S. Jan. 1.

Altazimuths.—Consists in using curved mirrors for taking the readings. In one form, a plumb-bob, consisting of a piece A, B, C with a weight O attached, is pivoted on a centre M. The object is viewed by direct vision through an eye-hole E.

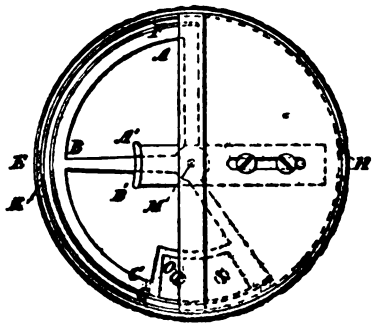

The curved mirror A^1 B^1 gives a magnified reflection of the scale F, E, G. The image of a sight line on the small piece K is brought opposite the object viewed through the opening H, and the inclination is shown in the mirror A^1 B^1.

---

377. Haynes, J. W., and **Whieldon, W.** Jan. 2.

Magic-lantern apparatus.—Relates to a lamp, and apparatus connected with it, for lighting astronomical charts when working with the telescope in the dark, and for other purposes. The lamp is provided with a magnifying-glass and reflectors, or may be made similar to a magic-lantern. The charts are of uniform size and shape and are fixed

Digitized by Google

in grooves, or made to pass in front of the lantern by rollers; or the image may be thrown on a screen attached. The charts are painted on transparent ground in opaque colours or *vice versâ*, and the invention is applicable to other maps, prints, &c.

---

880. Cory, G. E., and **Barczinsky, B. A.** Jan. 7.

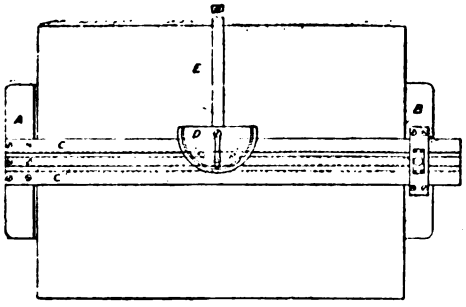

T-squares; rulers; protractors.—The T-square is provided with a fixed stock A at one end and an adjustable one B at the other through which the blade can pass to accommodate itself to different sized boards. In the stocks are fixed small friction rollers that bear in grooves in the edges of the board, to allow the T-square to move readily up and down. In the blade of the square, grooves C, C are formed in which slides a small protractor D having a ruler E that can be used as a set-square to any desired angle.

---

912. Galland-Mason, R. Jan. 8.

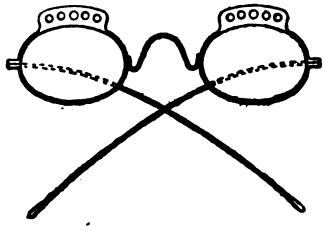

Spectacles and eyeglasses.—Along the upper rims of the spectacles &c. are arranged, behind suitable minute magnifying-glasses, several microphotographs which may consist of printed matter, lecture notes, maps, views, &c. to suit the requirements of the wearer. The rims may be made detachable, and the spectacles &c. may be used with plane glasses or no glasses at all.

---

926. Whitaker, R. Jan. 8.

Compasses, magnetic.—Relates to combined measuring-tapes and compasses. The compass is let in the centre of those tapes that are worked by a coiled spring. In tapes operated by a handle the compass is placed eccentrically as shown.

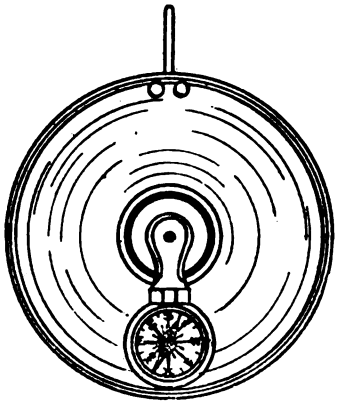

---

934. Duncan, W. H. Jan. 8.

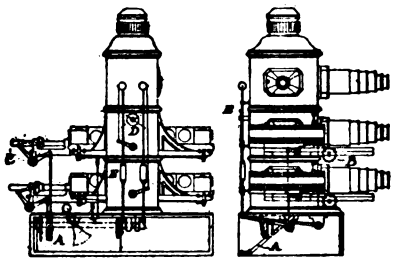

Dissolving-view apparatus.—The slides are carried in racks on each side of the lantern, and are moved forward by the action of a pedal A and ratchet-wheel B. On arriving at the end of the rack, the slide is pushed sideways in front of the lens by the levers &c. C, and after exhibition are moved back again in the rack on the other side of the lantern. The action of the pedals at the same time turns the gas-cock D by means of the rods &c. E, and also shifts the lime cylinder to present a fresh surface to the gas flame each time.

---

960. Justice, P. M., [*Boyhan, P.*]. Jan. 8.

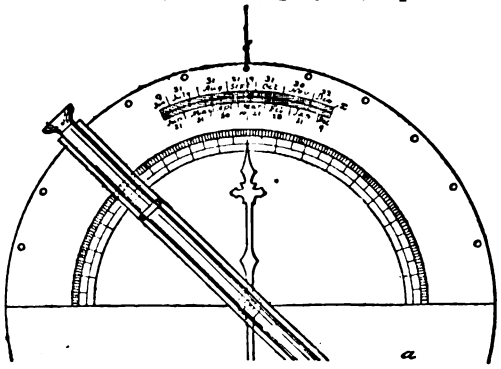

Latitude instruments.—The instrument consists of a graduated circle, with a centrally-pivoted

Digitized by Google

sight tube for sun or pole star. One series of graduation is degrees, and a second shows the declination of sun for each day of the year. The circle is held vertically and in the meridian. A radius bar is set to the declination of sun, and the tube sighted to the sun. At night time the radius bar is set to zero.

1101. Christensen, H. O. Jan. 9.

Barometers. — The object is to make barometers give a signal when they fall to a certain point. An aneroid A has its index F connected by a wire to an electric bell C and battery B. The other end of the wire is attached to an adjustable hand I, which may be set at any desired point. When the barometer falls to this point the index F comes into contact with the bent end I^1 of the set hand, and causes the signal bell to ring.

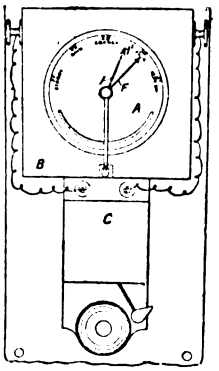

1138. Watson, T. P., [*Kirk, H. C.*, and *Brayton, J. T.*]. Jan. 10.

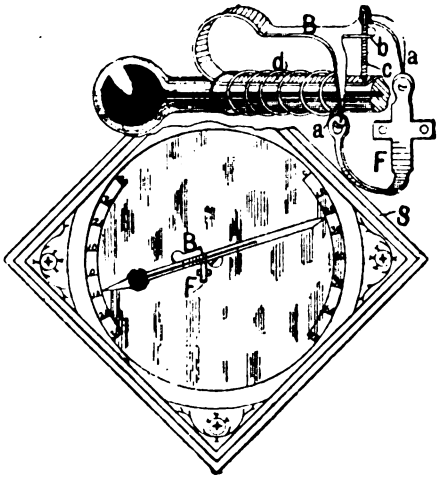

Thermometers. — Relates to the suspending-mechanism of balanced thermometers. A forked hanger or suspender B, fastened to the thermometer tube by binding-wire at *d*, has two needle points *a* at the ends of the fork. These bear in mercury cups in a forked bracket F. Or the fork may terminate in two knife-edges bearing in V's in the bracket. There is an adjustment screw *c* which passes through an offset *b* in the hanger, and bears on the lower part *d* of the hanger. Both ends of the tube A may be pointed so as to range over two scales, F. and C.

1346. Briggs, J. A. Jan. 12.

Sounding-apparatus.—This apparatus is designed to indicate the varying depth of water when vessels are passing through shallows, but may be used generally. A case containing a vacuum chamber &c. is trailed along the bottom, the case being so shaped that its resistance to the water tends to keep it downward. The vacuum chamber, which consists of two cylinders placed lengthwise, is acted on by the pressure of the water, and, by multiplying-mechanism, moves an index or lever over a surface alternately conducting and non-conducting for electricity. The index lies between two small pins, and is in contact with one or other of them according as the pressure is increasing or decreasing. The passage of the index over the surface sets up an intermittent current through one of the wires forming the towing-line, and thus works an indicator on board with a step-by-step movement actuated by an electromagnet. When the pressure is decreasing, the index lever below comes into contact with the other pin ; its retrograde motion over the surface sets up an intermittent current through a second circuit ; and, by means of a second electromagnet &c., turns the hand of the indicator on board in the opposite direction to before. The depth of water is thus at all times indicated on board, and by placing an electric bell in one of the circuits, the approach to shallower water is audibly denoted to those concerned.

1397. McGregor, D. Jan. 14.

Dials and the like for instruments for ascertaining compass errors, courses, and bearings, the heel or inclination of ships, &c. Consists in making the dials, quadrants, circles, and arcs of these instruments of vitrified enamel, porcelain, china, or earthenware.

1539. Wood, F. H. Jan. 16.

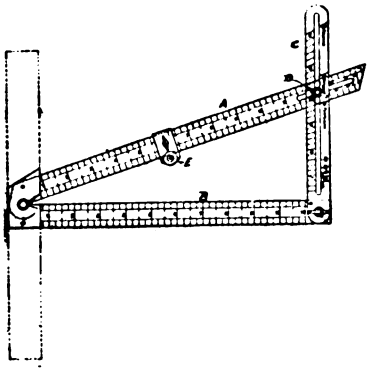

Protractors; arc-describing instruments.—Relates to instruments of the kind described by the same Applicant in Specification No. 2114, A.D. 1883. The movable arm A is attached to a fixed arm B,

Digitized by Google

to the other end of which a third arm C is clamped at right-angles. The arm C is graduated so that any polygon can be described, or any angle set off, and is grooved throughout its length to allow the set-screw D to pass through it to the arm A. On this arm also slides a pencil holder E to strike circles of any desired radius.

1603. Balch, W. Jan. 17.

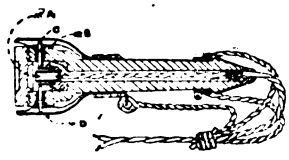

Sounding-apparatus. — The line attached to the weight contains two electric wires leading at one end to an alarum on board. The line passes down the centre of the weight to a cavity at the bottom; one of the ends is attached to a metal cap A, and the other to a spring-washer B surrounding it. Four pins C, pass through holes in the sides of the weight; and, when the apparatus strikes against the bottom, the covering-cap D pushes the pin inwards and puts the washer in contact with the cap A, whereupon the alarum is sounded on board.

1814. Hart, F. W. Jan. 21.

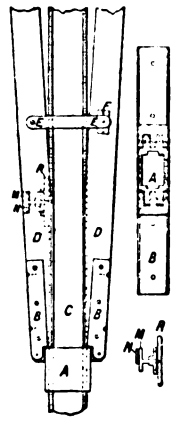

Tripod stands.—Each leg consists of three rods, two forming the upper portion, attached to the stand head by socketed pins, while the third slides freely between the other two and forms the lower portion. The upper rods D, D are fitted with straps B, B hinged to a sleeve A in which the central rod C slides. The upper rods are slightly bevelled off where they embrace the central one, and are pressed to it by the act of fitting them to the stand head. Further grip is obtained by the strap E, F, while if very heavy weights are to be sustained a ratchet-face clamp M, N, R is used.

2200. Hicks, J. J. Jan. 26.

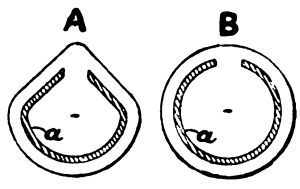

Thermometers, clinical. The tube is formed with a strip of enamel inside extending round the back and sides of the tube. The line of sight is thus left clear, guiding the eye at once to the correct position. The graduations are marked at the side of the opening over the enamel, increasing their visibility. In the drawing A is a "lens "front," and B an ordinary thermometer, the enamel strip being shown at *a*.

2510. Rothwell, W. G. Feb. 1.

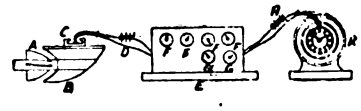

Logs, electric. The screw A of the log is formed with advancing blades, and is protected from eddies by the wing B. The log is attached by clips C to the side of the vessel. The screw spindle carries a worm, which actuates a wheel making and breaking contact periodically, so as to send a current through the wires D. Each such current causes an armature to be drawn down in the recording-apparatus E, which, by means of a ratchet and pawl, causes an advance of the first pointer of the registering-apparatus. The pointers on F, F are connected in the usual way, but those on G, G have their spindles attached to discs acted upon by friction discs geared with the train F, F and held tight by an armature. These pointers are weighted, and one carries an armature. Every hour the minute-hand of the clock K makes contact for the battery H and causes the armature holding the friction discs to be drawn back, setting free the pointers G, G, which swing back to zero, one by the action of the weight, and the other by the combined action of the weight and the attraction of an electromagnet, on its armature, brought into action by the current. The pointers F, F thus register the total distance run, while the pointers G, G register the distance each hour. The clock may be made to ring a bell, if required, just before the return of the pointers to zero. The action of the pawl and ratchet in causing motion is assisted by a spring wheel gearing into the train.

3196. Moore, F. M. Feb. 13.

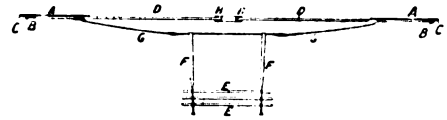

Compasses, magnetic.—The card A is an ordinary paper annulus lapped round the circular tube B, and strengthened by a thin paper strip at C. Radial bars D fix the frame to the ebonite cap H, which carries the centre stone on which the compass is supported. Light supports G carry the framework F, which holds the magnetic needles E, arranged in two systems, one on each side of, and equidistant from, the centre. The tubular rim and suspension gear are of aluminium for lightness and strength.

Digitized by Google

3232. Pirard, A. Feb. 13.

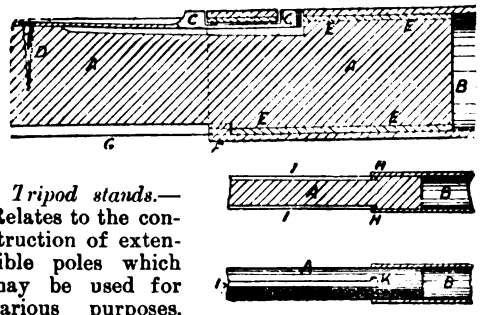

Tripod stands.—Relates to the construction of extensible poles which may be used for various purposes. The Figure shows the application to the handle of a spade, but the invention can be applied to tripod stands, tent poles, umbrellas, &c. The lower part A of the handle is of wood, and slides in the hollow iron part B. The wood carries one or more catches C fixed by the screw D, which can be pushed back into a recess, so as not to interfere with the sliding. There is a ferrule or ring E, on the end of the wood, and a slot G along it, for the projection F on the iron part to work in and guide the one part on the other. In a simpler form of handle, a slot or slots I run along the wood and projections H on the iron work in them. One or more short slots K, at right-angles, are provided so that a slight rotation of the handle can make all firm in any convenient position. The slots may also be made very short and turned towards the end of the handle away from the spade, so that the iron part can easily be detached. In a further modification, the projections are fixed to the wood, and the slots formed in the iron.

3510. Sharp, H. B. Feb. 18.

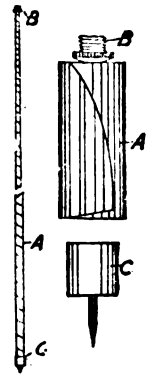

Surveying-instruments; tripod and like stands.—Relates to surveyors' staves, and to legs or standards for supporting stands for cameras, stereoscopes, telescopes, theodolites, music, easels, &c. A long strip of metal is formed into a spring A, coiled like the spring of a clock. To the inside of this is fixed a core B for attaching to the frame of the music stand, or whatever the legs or standards are to support. The spring is then drawn out, and twisted until it becomes a tapering rigid rod, when the socket C is fitted over the other end to hold it from unwinding. The socket may be supplied with a spike for sticking into the ground.

3666. Scott, P., and **Scott, A. T. H.** Feb. 20.

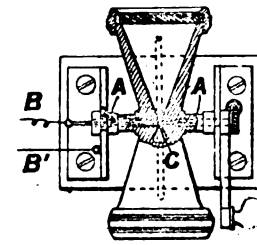

Logs.—Relates to an electric log and ship's engine counter. The indicator is placed in a circuit with a mercurial combined timer and circuit-closer, and a log and engine revolution counter, either of which latter can be thrown into the circuit by a switch according as the speed of the vessel or of the engines is desired to be known. The timer, which is shown in the Figure, is made of steel and is similar to an hour glass. It is suspended on pivots A, A, with which the wires B, B¹ are connected, so that the mercury in its passage through the neck C closes the circuit. On the engine shaft a series of wipers come into contact with a spring, which is thus deflected into contact with a second spring, making and breaking contact each time. The log is towed by an insulated wire leading to a spring contact inside the casing. The rotator causes a wiper to oscillate a lever each revolution, and make and break contact with the small spring. The circuit is completed through the water and ship's side. The indicator is provided with electromagnets and an oscillating lever by which an index finger is moved over a doubly-graduated dial showing knots and revolutions.

3750. Bellby, G. T. Feb. 22.

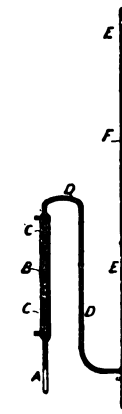

Thermometers.—The bulb A contains air, and is connected by a tube of very fine bore with a graduated tube B, in which is a piston of mercury to indicate the expansion of the air. The tube is surrounded by a jacket C, through which circulates some fluid, usually steam, at known constant temperature. The end of the tube B is again connected, by a tube of fine bore D, with a long vertical barometric tube E, hermetically sealed, which contains a column of mercury F to keep the pressure in the tubes constant. The space between the top of the mercury and that of the tube is of considerable length and is a vacuum, so as to allow of the mercury moving up and down as the air in A expands. The tube D may be dispensed with, by constructing B of greater length, and using it as the barometric tube. In this case the piston of mercury and the column are merged into one, and the indications of temperature are taken from one end of the column.

Digitized by Google

3771. Thomas, A. Feb. 22.

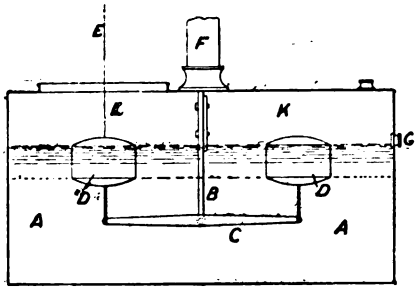

Photometers.—A suitable tank A is divided down the middle by a partition B, which does not reach the bottom. On the bottom of this partition is pivoted a lever C, to the ends of the arms of which the floats D, D are attached by chains. One float is free, and the other has a cord E fastened to it, by which it is connected with a pointer on a dial supported by the standard F. Through the standard a pipe passes, opening at one end into the chamber K and terminating at the other in a gas jet. The upper portion of the standard F is threaded, and a nut carrying a wire gauge can be screwed along it, so as to measure a standard height of flame. Water is first introduced into the tank through the tap G, until the floats are nearly submerged; gas is then allowed to enter, and the jet lighted. The pressure causes the float in K to fall and in L to rise, and the pointer is carried over the dial by a counterpoise. The pressure is raised until the flame burns the standard height, and the pointer then indicates on the dial the richness of the gas.

3852. Bruce, T. W. Feb. 25.

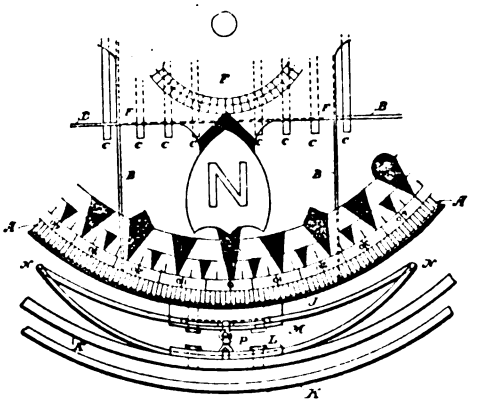

Compasses, magnetic.—The object is to construct a compass which will withstand the shocks incidental to sea use. The card of the compass is made especially light. The framework consists of four brass wires B fixed to a light ring A, over which is stretched a cover of glazed silk or other light strong material F. The magnets C are formed of watch-spring steel, and are sewn by waxed thread to the cover F. The bowl J is suspended from the gimbals K by bent wire springs N. These are held by plates L and M on the gimbals and bowl respectively, while small chains P are attached to the plates to prevent any undue strain on the springs.

3879. Korshunoff, N. Feb. 25.

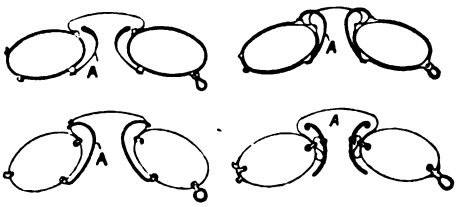

Eyeglasses.—Attached to the glasses are holders or clips A, which extend back into the corners of the eyes, and round almost to the middle of the eyebrows. This distributes the pressure more uniformly, instead of pinching a small part of the nose only, and secures the glasses more exactly in position before the eyes. The holders may move on a swivel as in the lower Figure on the right, so that the glasses may fold up flat in the ordinary manner.

3881. Barry, J. H. Feb. 25.

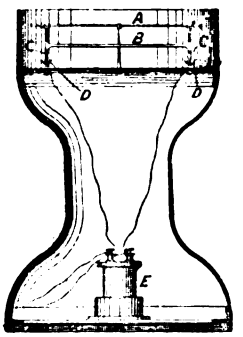

Compasses, magnetic; photometers; &c.—Relates to electric registering apparatus for use with compasses, photometers, radiometers, anemometers, aneroid barometers, and weather indicators. The Figure shows the application to the mariners' compass. From the card A is hung a pair of insulated parallel bars B, which carry at their ends pendants of platinum C. At every quarter-point of the compass is fixed a spur-shaped contact-piece D, connected with the poles of a battery E. A cylindrical drum, rotated by clockwork, carries the paper on which the register is kept, the paper being ruled in divisions parallel to the ends of the drum, and marked with the points of the compass. A screw, terminating in a ratchet-wheel the pawl of which is actuated by an electromagnet, carries the marking-pencil. As long as the ship's head remains in one direction the pencil is stationary and the line traced keeps to its division. When the ship's head is turned, the pendants sweep over the contact-pieces, making and breaking contact, turn the screw, and cause the pencil to travel parallel to the axis of the drum. The arrangement of the parallel bars and contact-pieces is such that a reverse motion of the ship's head brings the pencil back again. In the application to a photometer, a radiometer is

Digitized by Google

used, every revolution or half-revolution being registered by counting-mechanism operated by the electromagnet, and the apparatus may thus serve the same purpose as a gas meter.

3985. Dalton, W. H., [*Crocker, S. H.*]. Feb. 26.

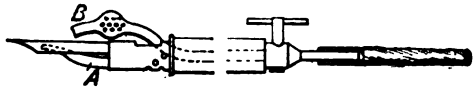

Compasses, drawing; ruling-pens. — Relates, mainly, to a reservoir pen with a gas burner for heating the nib, the invention being stated to be applicable also to ruling-pens and bow pens or compasses for use in lithographic, transfer, and like processes. Lithographic or other ink is contained in the tube A, while a flame impinges upon the pen from the jet B and keeps the ink sufficiently fluid during the operation of writing upon glass or other surface. Gas is supplied by a small tube passing through the holder.

4132. Wood, C. H. Feb. 29. *Drawings to Specification.*

Thermometers and barometers are combined, separately or together, with sideboards, cheffoniers, dressers, sewing-machine covers, and similar pieces of furniture, or a clock may also form part of the combination.

4303. Clark, A. M., [*Dany & Lepage*]. March 3.

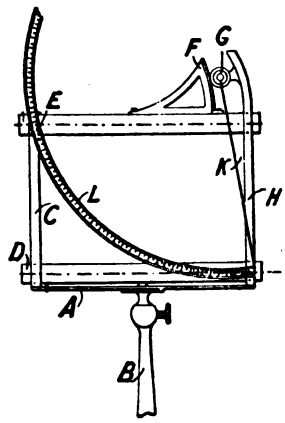

Telemeters.— Upon a framework A attached by a ball-and-socket joint to its stand B are mounted two telescopes, one D being fixed and the other pivoted at E to the arm C of the frame. The movable telescope carries an arc F working a friction roller G on the arm H of the frame; to this roller is attached the index finger K, which moves over the scale L and indicates the distance of the object sighted by both telescopes, not the angles at which they are inclined. The movable telescope is adjusted by a screw, which slides it between guides. In instruments for greater accuracy, the adjustment is made delicate by a train of wheels, so that the pointer travels through a large angle for a slight motion of the telescope. For the scale there is a series of graduated concentric circles, and the index finger is made to travel along the pointer so as to point to each in turn, and show the number of complete revolutions. The instrument may be mounted on a geodesical circle or any convenient stand.

4584. Ferranti, S. Z. de. March 8.

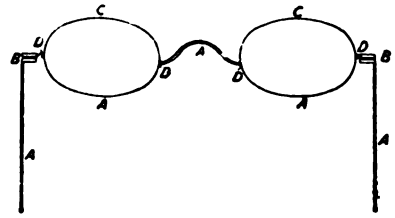

Spectacles.—In one form of frames, the arms, the lower part of the rims, and the bridge are formed of one piece of steel wire A. The bridge consists of a piece of soft iron threaded on the wire before bending. The upper parts of the rims C, C to surround the glasses are fixed on by coiling the ends round the wire A at D, D. At B, where the arms and rims are usually hinged, the wire is flattened, or coiled helically, or both, to render it very flexible, so that the arms can be bent down upon the glasses to go into a case. The rims and arms may also be constructed entirely of one piece of wire.

5086. Lake, W. R., [*Genex, D.*]. March 18.

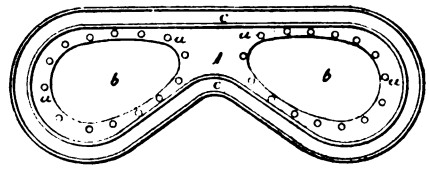

Eye-protectors.—The object is to provide eye guards or protectors for the use of firemen, and for workmen in metal and chemical factories. They consist of a flat metal frame A in which two mica plates *b* for the eyes are secured by rivets *a*. To the back of the frame is fastened a marginal tube *c* of india-rubber, so that the eyes are protected in an airtight manner from smoke or fumes.

5164. Woodbury, W. B. March 19.

Dampness detectors for linen &c. Gelatine, alone or in combination with glycerine, sugar, or other like hygroscopic material, is prepared in sheets which are cut into stars or other shapes. When placed upon damp linen or other materials they absorb moisture and curl up at the points.

Digitized by Google

5369. Haddan, H. J., [*Mora, F. A.*]. March 24.

Dividing-instruments for circles. A flat graduated bar A is fitted at one end with a perpendicular support B having a sharp point. Upon the ruler is an adjustable slide C, with a slot D in its side through which the graduations on the bar can be seen, and which carries a wheel E the radius of which is equal to one of the equal graduations on the bar. This wheel is provided with a pricker, which makes a mark each revolution. On moving the slide to any division, the circle described will be divided into that number of parts.

5443. Marks, P. S. March 25.

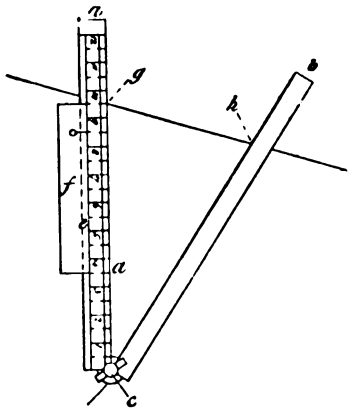

Dividing-instruments for straight lines. The instrument is used for dividing a straight line into any number of equal parts. The two hinged arms *a*, *b* are provided with a set-screw *c*. A particular division of the graduated arm is placed at one end of the line *g*, *h*, and the other arm is then opened till it crosses the other end *h*, and secured by the set-screw. The rule is then slid along in the holder *e*, *f*, one space at a time, and the other arm cuts off the parts from the straight line.

5509. Clark, A. M., [*Hayes, H. E.*]. March 26.

Tripod stands for maps and charts. A base-block A is cast upon a central rod B, which is screwed at each end to receive the nuts C and D. The legs F fit into a socket E on the base, and are clamped into place by a wedge block which is tightened up by the nut C. The upper block H revolves on the central rod and is fitted with two rods K, upon which the cross rod M is placed. The chart or map is then hung from rings fitting over hooks on the rod M.

(*For Drawing see next column.*)

5509.

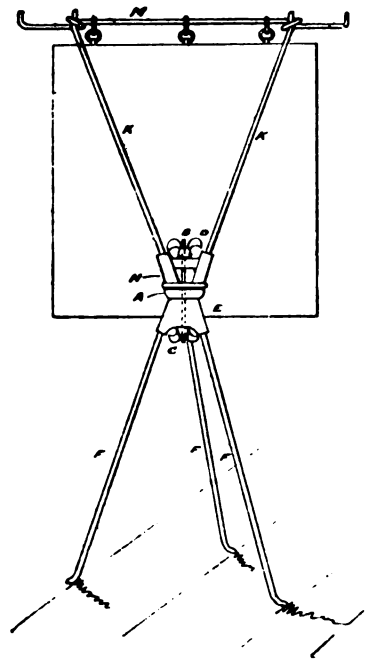

5571. Clark, A. M., [*Carroll, D.*]. March 27.

Logs and leeway indicators. — The apparatus consists of two vaned rotators A, B, working in arms F, F, so attached to the stock C that the whole can be passed through a narrow well D in the ship's bottom E, the rotators taking a vertical position during ascent and descent, as shown in dotted lines. They are lowered by a pinion gearing with a rack on the end of the rod H, so that, when a cap stops the descent of the stock C, the further descent of the rod, by means of the way in which it is fixed to the arms, and their eccentric, pivoting at G, swings up the arms into position. The rotators are slightly and equally inclined in opposite directions to the ship's axis; consequently, when the vessel is going ahead, they rotate equally, and if there is any leeway, one moves faster than the other. Upon the ends of the vane spindles worms P are fitted, which gear with worm wheels on two wires N, N passing up through the narrow tubes M in the stock to the indicating-apparatus. These wires carry a right and left handed worm respectively near their upper end, and a little

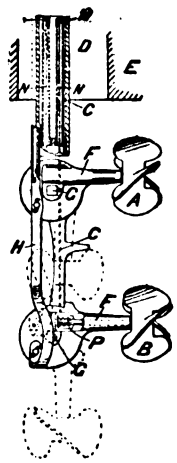

Digitized by Google

above these a right-handed worm each. The first or lower pair is connected with differential gearing, so that, if the wires rotate at the same speed, no effect is produced, but a difference causes the rotation of the hand on the leeway indicator dial. The second pair, by means of similar gearing, causes the rotation of the wires to be added up, and moves the hands of the headway indicator dial. The wires terminate in flexible portions which are bent round into a line, and on their ends are fixed two bevel-wheels forming part of a system of differential gearing which shows whether the vanes are properly adjusted, by indicating an equal revolution of the wires when there is no leeway. The tubes M act as lubricators, a sufficient head of oil being maintained to force out the water, and supply the working parts.

5647. Thomson, J. March 29.

Tripod stands for photographic cameras. Additional supports are furnished to the camera by slotted stays A, which connect the corners of the base of the camera to the camera legs. The stays are slotted at one end and clamped in the proper position by screws B. For use at sea the camera is kept horizontal by a pendulum swung on gimbals. The gimbals are placed within the cap of the stand.

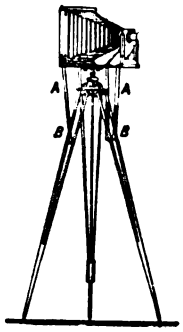

5803. Lake, W. R., [*Abbott, L.*]. April 1.

Ellipsographs. — The principle of this instrument is to simultaneously impress upon the pencil a longitudinal and transverse reciprocating motion so as to describe an ellipse. The pencil is carried at the end of the arm A, which slides in the slotted bracket B. This bracket forms part of a frame C, which is capable of sliding transversely on the guide rods D, D attached to the light framework E, which rests on the table or drawing. To the centre of the framework is fixed by the pin F the disc G, which is adjustable eccentrically by means of a slot through which the pin passes; a nut screwed down tight holds it in the position required. The disc G is also fitted with a slotted arm H, fixed at its side and bent back over its centre. The headed pin K is adjustable along this slot, and passes also through the slotted arm L, attached to the arm A at right-angles to the same. When the disc G is rotated, its eccentric mounting will cause the frame C to reciprocate transversely, and the pencil with it. At the same time as the pin K rotates, the pencil rod reciprocates also longitudinally. Graduations for adjustment are marked along the sides of the slots in the disc and the slotted arm H.

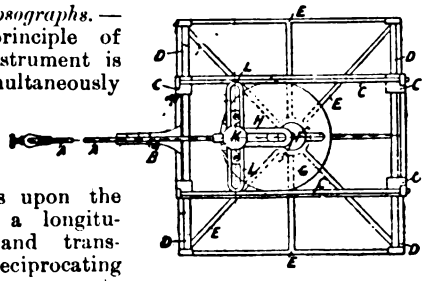

5921. Keith, W. C. April 4.

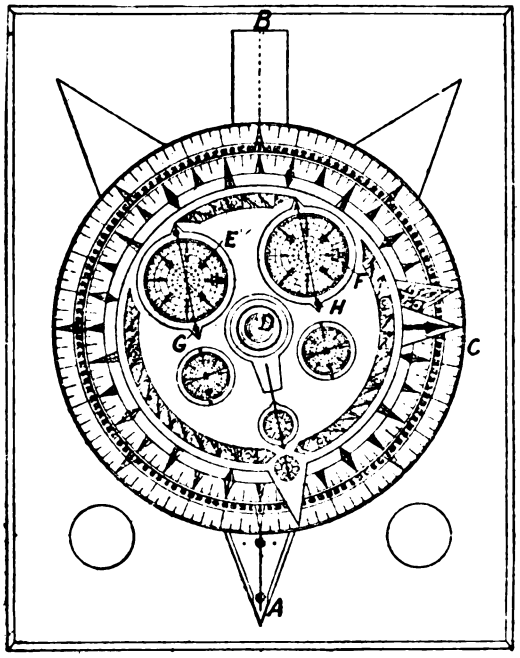

Course indicators.—A series of superposed discs of brass are supported by wood between them, the lowest one being fixed to a stand which may be placed in any convenient place to be referred to by the officers of the ship. The line A B is kept parallel to the keel. The discs are graduated with points and fractions of points of the compass, and each movable disc can be rotated round a central spindle D, by means of the projections, such as C, and adjusted in any required position. The course steered being, say, east, the pointer C is set north and the dials E, F are connected by gearing so as also to point north. If, then, any deviation is to be made, such deviation is allowed for by altering the position of the upper disc, and is then shown by the directions of the arrows G, H. The other dials are duplicates, only here the arrows move, while the dials are fixed.

Digitized by Google

6093. Bellby, G. T. April 8.

Thermometers.—Relates to the air thermometer described in Specification No. 3750, A.D. 1884, and consists in another method of regulating the pressure in the instrument. The air-bulb A, connected by a very fine tube B with the tube C in which a piston of mercury D moves, and the steam jacket E surrounding the tube C to keep its temperature constant, are all the same as in the above-named Specification. The improvement lies in connecting the end of the tube C with a vessel F of comparatively large size, also surrounded by the steam jacket. This vessel may be either a bulb, as shown in Fig. 1, or a long tube as shown in Fig. 2. The thermometer is thus always closed, and the slight variations of pressure within the instrument may be arranged for in graduating it.

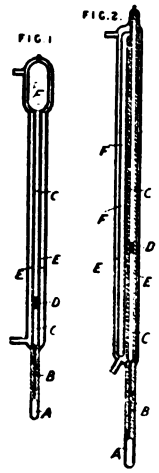

6181. Green, W. April 9.

Compasses, magnetic; clinometers. — Relates to a combined clinometer and prismatic compass. The compass card and clinometer card are on opposite faces of the instrument. The prism A is mounted on a block D pivoted to the frame, and can thus be turned round to read the angles on either face of the instrument. A catch F retains the block in either position. The sight frame B is jointed to a projecting hinge, so that it can be used for either face or lie down flat on one face when not in use. The compass card is lifted from its pivot, when not in use, by a small lever with a projecting nut, and is brought to rest by a spring pressed down by a small stud shown at I.

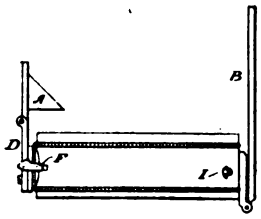

6288. Moore, F. M. April 12. *Amended.*

Compasses, magnetic.—The correctors for controlling the errors of the compass are attached to the bowl itself instead of to any fixed part of the case, thus securing an invariable position and action of the correctors to the compass needle. The magnets A, A for the cardinal errors are placed in a chamber B fixed below, and forming part of the bowl C. They consist of brass rods with a core of magnetized iron of various thickness, and are made of uniform size to allow of their being readily interchanged. They are clamped in

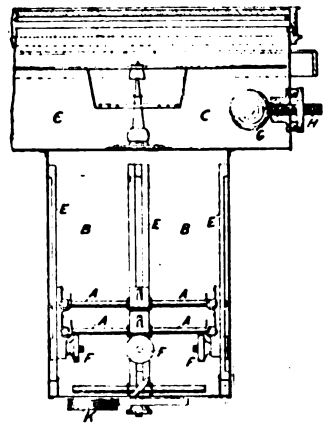

brackets working in slides E on the sides of the chamber, and can be adjusted to any position and fixed by the set-screws F. The "quadrantal" correctors consist of two balls G of soft iron placed in a line with the magnets of the card, and adjustable to and fro by screws H. They may be fitted either inside or outside the bowl with fluid compasses; they are enclosed in brass cylinders if in the bowl. The final adjustment to make the card horizontal is effected by the eccentric weight K.

6312. Preece, W. H., and **Trotter, A. P.** April 12.

Photometers.—The rest A for the lamp slides along the rod B, and has the bar C attached to it by a hinge. The bar C is pulled against the cam D by the spring E, and can be moved by the piece F on the screw G. The cam D is so shaped that the distances measured along G correspond to the inverse squares of distances measured along B. Equal graduations on the wheel H thus enable the power of a light to be read off at once. Instead of a fixed cam-plate the bar A C might be appropriately shaped. Mirrors are placed at K, K for facilitating the inspection of the screen L on both sides.

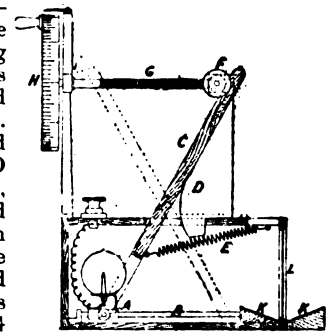

Digitized by Google

6369. Walker, T. F. April 15.

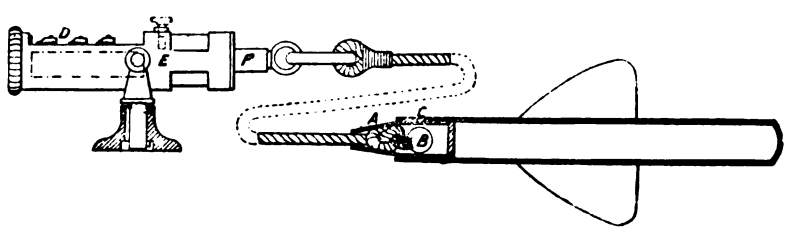

Logs.—The rotator is provided with a hollow conical piece A at one end. The apex is cut off so as to leave a central hole through which the rope passes. The rope is drawn out at a side opening B, knotted, and drawn in again, when it locks against the inside of the cone. A cylindrical piece C is then slid over the hole B. The rotator is made of some light material, or hollow at the hinder end and weighted at the front end. The indicating-mechanism is contained in a casing D on board which can be disconnected from E by sliding, being held in contact by a screw. Slots in the case of D permit it to be partially turned or slid away from E without moving the screw, for convenience of examining. The whole apparatus is constructed so as to secure ease in getting at the working parts for oiling or repairing. The first motion spindle F is terminated by a disc turning on friction rollers. Thus the piece E, mounted on a gimbal, takes the strain. In place of a gimbal a cranked or looped metal sling may be employed to permit of inspection of the dial from either side of the instrument, the inner dial-case being turned (by a milled head) within the outer perforated case; or the whole registering-mechanism may be reversed. The disc engages a small wheel which drives the indicating-wheels by means of a pin. To admit of the easy removal of the gimbal from its socket or fixture it is secured to the latter by a bayonet joint or somewhat similar device.

6375. Lamers, J. April 15.

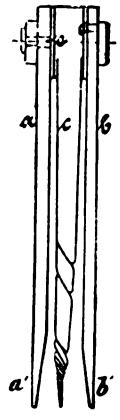

Compasses, drawing, combined with hand tools &c. Two or more tools are pivoted on a common axis so that each can be turned into any required position independently of the others, and thus, while one tool is being used, the others may form a handle or lever to the same. This combination tool contains screwdrivers, scales, a file or saw, a gimlet *c*, and a wire cutter; it may also be used as a pair of compasses. The screwdrivers a^1 and b^1 are formed at the end of the file *a* and the saw *b*, on the flat sides of which scales of inches and centimetres are also marked. A radial notch *e*, having sharp edges, is formed in the boss of each tool, and when wire has been inserted the notches will act as a wire-cutter by turning one of the blades quickly on its pivot.

6377. Lake, H. H., [*Fox, I.*, and *Scott, J. H.*]. April 15.

Eyeglasses.—The spring connecting the lenses A is made in two parts C, C, each of which is curved back over the glasses. The ends are joined by a stiff piece of metal D, which prevents any undue strain on the springs by the frames abutting against the metal yoke. The nose clips B each consist of an inclined bar *a*, attached to an arm *b*, which can be fixed to any convenient part of the frame, and, being of soft metal, allows of the adjustment of the glasses.

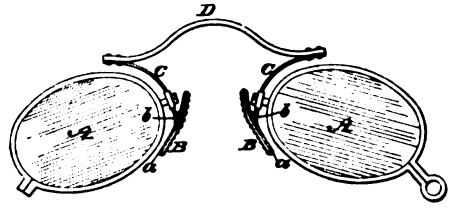

6723. Pope, D. April 23.

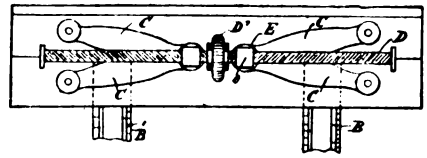

Parallel rulers.—To the upper ruler are fixed parallel graduated guide-bars B, B^1, upon which the lower ruler slides. The two rulers are connected by double links C, C pivoted together at *e*, and carrying nuts E through which passes the rod D. This rod is threaded half right and half left handedly, and is rotated by the milled head D^1, causing the nuts E to separate or close together, and the lower ruler to slide along the bars B, B^1.

Digitized by Google

6842. Falkner, V. April 26.

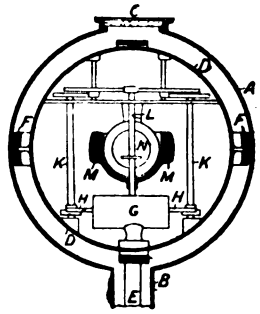

Gyroscopic apparatus; course indicators.—The object of the invention is to keep two gyroscopes constantly rotating in planes at right-angles to each other, so as to prevent the rotation of the vessel supporting them. The apparatus may be used in place of the compass and to determine latitudes, while the apparent rotation of the vessel indicates longitude &c. The apparatus consists of an external shell A, provided with a sight hole C, and supported on a hollow pillar B screwed to the base-plate. Within this shell is an inner shell D, which carries the gyroscopes and working parts. A vertical gimbal ring is held by the spindle E passing down the hollow pillar and resting on a bearing at its lower end, its upper end being supported by antifriction wheels. A horizontal gimbal ring F is carried by antifriction bearings on the vertical ring, and this in turn is connected with the inner case by antifriction bearings. G is a double piston cylinder, which may be either fixed or oscillating; H, H, its two connecting-rods, actuate the spindles K, K which by means of toothed wheels and friction gearing communicate very rapid rotation to the central spindle L, to which is attached one gyroscope in the form of a hollow bowl M. Upon the spindle L is a friction disc which transmits its rotation to a pair of discs N, one on each side of the spindle, forming the other gyroscope. The interior of the inner shell is a vacuum, and the pistons are worked by fluctuations of air-pressure in the space between the shells with which a pipe from the cylinder communicates, these variations being created by working a hand or other pump. On the exterior surface of the inner shell are painted latitudinal and meridional lines, divided scales, mappings, &c., and a compass dial, movable pointer, and other fittings are fixed to the outer shell, or vertical gimbal, so as to be visible through the glass plate C.

6994. Mills, B. J. B., [*Macdonald, J.*]. April 29.

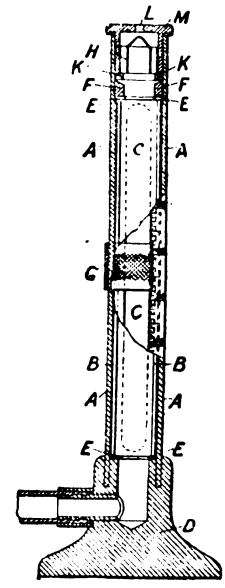

Levels.—Relates to an improvement in the standard of the level described in Specification No. 3034, A.D. 1883. The standard consists of a brass tube A fixed to a base D, and having a slot C at each side, through which the liquid in the glass tube B can be seen. The ends of the glass tube rest on packing-rings E, E of india-rubber, the upper one being kept tight by the nut F. The edge of one, or both, slots is marked with a scale, and a sliding indicator G, consisting of a part ring with guide pieces working in the slots, is used to mark the place at which the liquid is standing. At the upper end of the standard is an automatic, conical headed, float valve H, which rests on a stop K under ordinary circumstances, leaving free the air-hole L in the brass screw-cap M. Should, however, the liquid rise so as to escape, or the standard be inverted, the valve passes into the undercut portion of the hole L, and such escape is prevented.

7373. Meyer, O. May 7.

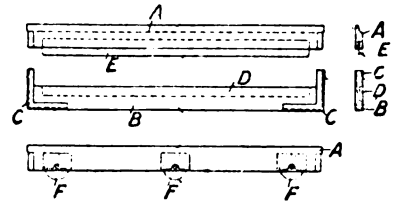

Rulers combined with knives. The ruler is made in two parts A and B, which can be fitted together to form an ordinary ruler by the clamps C. In the inside edges of the parts are two saw cuts D, in the upper of which is fixed a knife E, which can be used for cutting paper in straight lines. When the parts are fixed together the edge of the knife lies in the second saw cut. Instead of one long knife, two or three shorter ones may be used, or circular knives F, F may be employed.

7639. Wallich, G. C. May 13.

Microscopes, condensers for. The condenser consists essentially of a truncated cone of glass through which the rays of light are transmitted and suffer internal reflection at the sides. The cone A, with the lens B cemented to the base, is fitted into the jacket D which screws into a plate E. This plate slides in the tube F, F¹, to vary the distance between the lenses B and C, and

Digitized by Google

the whole is fitted with a diaphragm or shutter G to regulate the admission of light.

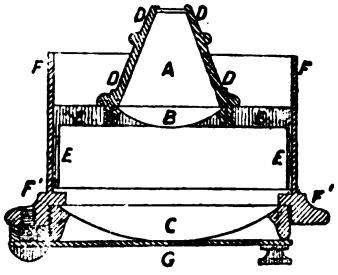

8248. Freeman, D. May 27.

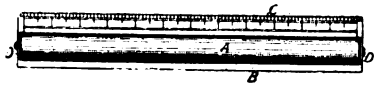

Rulers.—An ordinary round ruler A is provided with a parallel guard B running its whole length and fixed to two end pieces D, D. The pen is pressed against this guard so that the ruler does not get inked. To D, D is also fixed the counterpoise C, on which the fingers press while ruling; it is graduated for measuring, and its edge can also be used as a ruler with a bow pen. The ruler itself is graduated circumferentially at its end, and a pointer is fixed to D, so that the ruler can be moved any required distance down the paper.

8393. Calley, S. May 29.

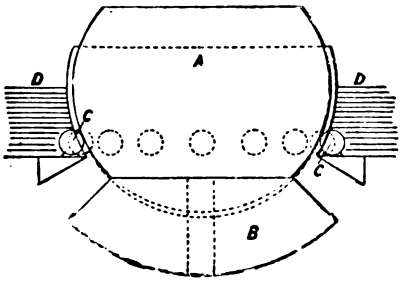

Compasses, magnetic.—Relates to apparatus for controlling the rolling and pitching of ships, ships' saloons, and furniture, and also applicable to a mounting for compass cards. The Figure shows the apparatus partly in section as applied to ships. It consists of a sphere A carrying a heavy weight B and resting on balls C, C in a framing D secured to the vessel. This weight is so shaped that the vessel may roll several degrees, but should it exceed this the weight, by coming against the framing, prevents or diminishes further rolling.

8394. Pitt, S., [*Bos, M. G. V.*]. May 29.

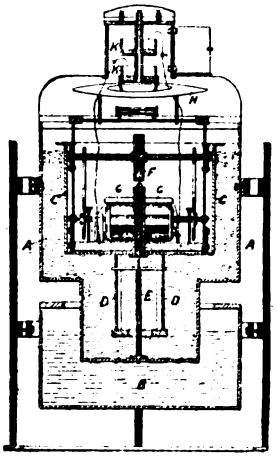

Gyroscopic apparatus; course indicators.—The principle of the invention is to dispense with magnetic needles and use in their place a gyroscope. The apparatus consists of a case A swung on gimbals, and with a contracted lower part resting in glycerine in a case B also swung on gimbals. A is partly filled with a mixture of alcohol and water, in which rests the case Q containing the working mechanism, which, if necessary, is steadied by the contracted lower part D. The case C nearly floats in the liquid and so bears only lightly upon the supporting-pillar E and turns upon it very readily. Within C is mounted a heavy wheel F the axis of which is connected with the rotating axes of two electro-motors G, G. A compass card H is mounted on the case E, with the north and south line parallel to the axis of the wheel F. Electricity is conducted to the motors by means of wires dipping into the mercury cups K, K fixed to the lantern on the case A. The requisite play is thus given to the case C. Other means however may be employed for driving the wheel F, as, for instance, clockwork. It is claimed that the wheel F, acting as a gyroscope, combined with the mounting of the instrument, so as to preserve the axis of F horizontal, causes this axis to settle in the meridian.

8670. Mayer, J. June 6.

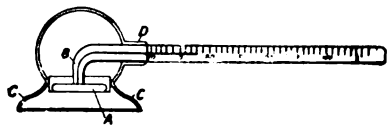

Thermometers.—Relates to apparatus for taking the temperature of a surface. The bulb A is spiral and the tube bends at B. This part is contained in a cup of ebonite or some such material, which protects the bulb from extraneous temperatures. An india-rubber flange C is fitted below the bulb, and gives way when the thermometer is placed on a surface, forcing out the cold air, and keeping the instrument in place. The tube, where it passes out of the cup, is surrounded with india-rubber tubing D, and, if necessary, a stiffening-ring is put round the mouth of the cup.

Digitized by Google

8794. Torre, F. D. June 10.

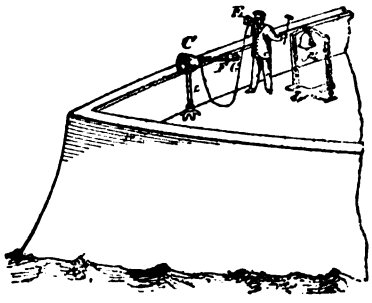

Sounds, locating.—The object is to provide ships with means for detecting in foggy weather or at night the proximity of land, icebergs, vessels, or other solid objects. The principle made use of is that of the echo, and the means employed consist principally of a sound-producer and a sound-receiver. In the arrangement shown A is a bell, the sound emitted by which is reflected from any solid body in the proximity of the ship, and returns to the receiver C which is pivoted to a stem *c*. A telephone is attached directly to C, or a microphone may be inserted therein and connected by a wire with the telephone E. The arm of the receiver is provided with a compass F and a timepiece G, by means of which the direction and distance of the reflecting body can be readily found, the time between the transmission and receiving of the sound being noted. If desired the telephone and timepiece may be removed to the cabin and the bell worked therefrom, by which arrangement the interference of extraneous noises will be obviated.

9116. Bourne, H. B., and **Bourne, H. R. F.** June 17.

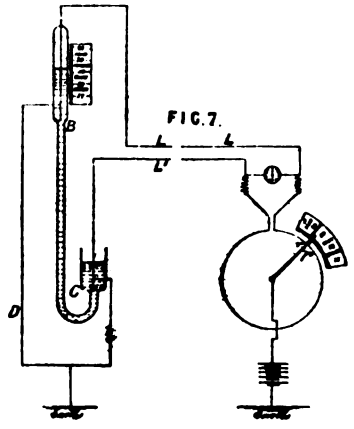

Barometers and thermometers, reading at a distance by electric means. Line-wires L, L^1 are carried into the mercury of the barometer and preferably attached to the tube at B and C. A conductor D connects the two wires to cut out the mercury and complete to earth. When the mercury falls at B it rises proportionately at C, the resistances of the line-wires L, L^1 being varied. A contact *r* in a Wheatstone bridge is moved over an index until the current detector comes to zero, the index giving the reading of the barometer. This arrangement is also applicable to thermometers &c. In another arrangement, an insulated float in the barometer &c. alters the position of a sliding contact.

9393. Murrie, J. June 25.

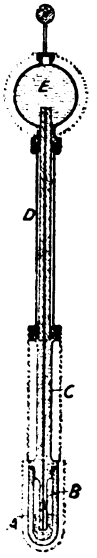

Pyrometers.—The principle employed is the expansion of a liquid against the force exerted in a closed tube by a more compressible liquid. The first liquid can thus be heated to temperatures considerably above its normal boiling point without vapourizing. A is a steel or iron vessel containing mercury, which may have water or ether or some compressible fluid B in contact with it, where great sensitiveness is required. An iron or steel tube C dips into the mercury and is screwed into the vessel A. A glass tube D is connected by nuts and packing with the tube C and the globe E, which contains alcohol and which may be surrounded by water to keep the temperature uniform. The alcohol occupies a part of the tube D. A scale on or attached to D indicates the temperature. The tube C may be dispensed with, and the glass tube directly connected with the vessel A. The vessel A and the tube C are preferably coated with fireclay to prevent oxidation.

9461. Clark, A. M., [*Moëssard, P.*]. June 26. *Drawings to Specification.*

Compasses, magnetic, combined with photographic cameras. Relates to a panoramic camera of special construction. To allow of its position being adjusted, a small compass with a moving graduated limb is fitted on a projection at the bottom of the camera.

9464. Tomlinson, E. June 26.

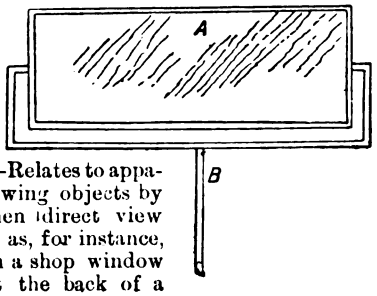

Reflectors.—Relates to apparatus for showing objects by reflection when direct view is impossible, as, for instance, the articles in a shop window to persons at the back of a

Digitized by Google

crowd, the objects in front of a boat to the rower, &c. Consists in mounting a mirror A on a stand B so that it can be turned in the required direction. In the Figure it is mounted so as to revolve round a horizontal axis.

9793. Wright, T. July 5.

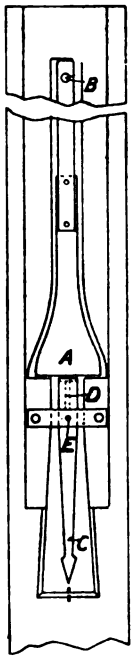

Plumb-rules.—A plumb-bob A is fixed to a rod pivoted at B, and a pin D at its end controls the pivoted index finger C showing when the rule is exactly vertical. The working parts are covered by a casing to protect them from wind and weather. A spirit level and thermometer may be attached.

9876. Bennett, J. F., and **Smith, B. B.** July 8.

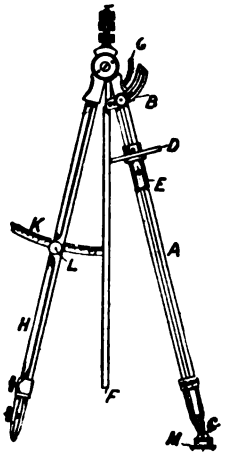

Mathematical drawing-instruments.—Relates to compasses and the like for tracing various curves, such as circles, spirals, ellipses, &c., and other regular or irregular figures. Various arrangements are described, of which one is here shown. A spindle on the shoulder B, passing down a socket in A, allows the instrument to revolve, while A is connected to the piece M, fitted with two or more points, by a ball-and-socket joint C, but prevented from revolving by two pins fitting a groove in the ball. A templet D of any desired shape is adjusted as required upon the leg A by means of a sliding piece E, and against this templet the leg F is pressed continually by a spiral spring G. The leg H, which carries the pen, is clamped at any required angle to F by means of the quadrant K and set-screw L. It follows that, as the instrument is revolved, the shape of the templet will determine the curve traced. Another form is illustrated in the Specification, in which a cord attached to the rotating leg is wound on a cone on the fixed leg; this is for tracing spirals. For tracing ellipses, the fixed leg may have a cross-bar with a pulley at each end, round which, and round the moving leg, a cord is passed. The non-rotating leg may be made in three lengths connected by knuckle joints in planes at right-angles. The legs may be parallel, the loose leg being held by a cross-bar. This last form is mentioned in the Provisional Specification only.

9931. Thorp, T. July 9.

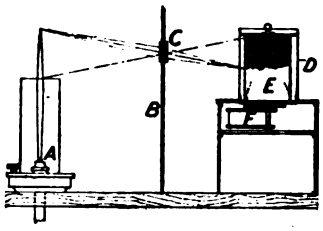

Photometers, registering. A governor valve, preferably a diaphragm governor with a loose valve resting on the central portion, ensures a constant flow of gas to the jet-burner A. In the opaque screen B is an aperture, in which is fixed a lens C. This lens throws an image of the gas jet through a narrow slit in the outer drum D, upon sensitized paper carried by an inner drum E. Clockwork F slowly rotates the drum E, and thus a continuous record of the height of the jet is kept, by which the illuminating power of the gas can be estimated. Instead of a drum and sensitized paper, dry plates, drawn forward by clockwork, may be used.

10,075. Lea, J., and **Harvey, G. C.** July 11.

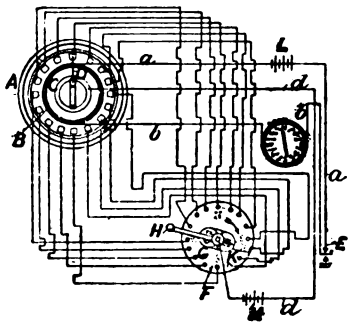

Compasses, magnetic.—The object of the invention is to enable the indications of a magnetic compass to be read at a distance from the same, so that the compass may be floated in a boat out of the range of the disturbing influence of the iron on the ship. The Figure shows only the principle of the invention. Contact-pieces are fitted round the card of a compass A at each point, or half-point; there is also an insulated coil B round the

Digitized by Google

needle, and a metal ring C below it. The needle carries a light contact-maker D, which, when the needle dips, connects the ring C with the adjacent contact-piece. The dipping of the needle is caused by depressing the key E and sending a current from the battery L through the wires *a*, *b*, which may also include a second coil round another compass for purposes of comparison. From each "point" contact-piece on A a wire passes to a corresponding piece on the recording-instrument F, all these wires being combined into one cable. A wire *d* passes from the ring C to a second battery M and thence to the electromagnet G on a frame rotated by a handle H. On pressing the key E the needle dips; the handle H is then turned until a metal point on the frame touches the contact-piece corresponding to that on the distant compass against which the needle is dipping. A current flows through the parts *d*, C, D, G, M, and the consequent motion of the armature of G sets free a pointer K which was before carried with the rotating frame, and leaves it to show the direction of the needle of the distant compass. An automatic registering-apparatus worked by clockwork, and keeping a record on a revolving drum, may be substituted for the hand instrument here described.

10,105. Clark, A. M., [*Olson, A. G.*, and *McFarlane, J.*]. July 12.

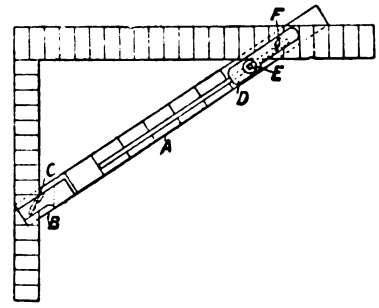

Squares for builders' use. The instrument is adapted for laying out rafters, stairs, &c., and consists of an ordinary square with a slotted bar A of L-shaped section adjustable thereon. One end of the bar terminates in a jaw B and is clamped as desired by the set-screw C; a second jaw D works in the slot and is adjusted by the sliding stud E; it is then clamped to the square by the set-screw F.

10,112. Silversides, J., Dudding, W., and **Megson, H.** July 14.

Course indicators and correctors.—Relates to a calculating-apparatus for use in navigation, with which is combined a course indicator and corrector. The instrument consists of a rectangular plate on which is a quadrant A B divided into degrees and also into points and quarter-points of the compass. A radial arm C, divided into degrees and sixths of a degree, is pivoted at D, the centre of the quadrant, being attached to the horizontal scale similarly divided. A movable perpendicular E divided in a similar way slides on the horizontal arm. The mercator scale F slides between bars and is diagonally divided. The different scales are provided with verniers. G is a scale showing the relation between time and longitude. H is a "course corrector" and consists of a compass card and index turning independently; by means of it the true course can be corrected for variation with reference to steering, and the compass course for leeway and variation in order to correct reckoning.

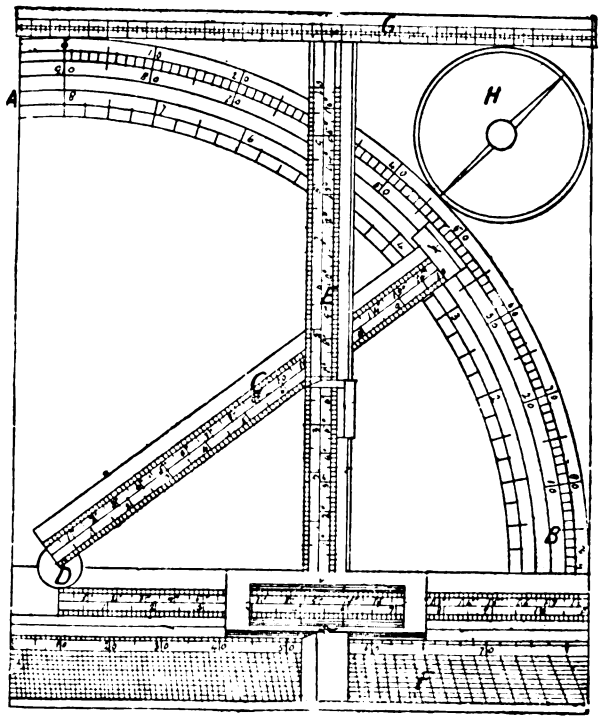

Digitized by Google

10,140. Husband, J. July 14.

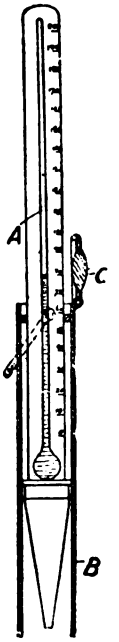

Thermometers; magnifying-glasses.—A thermometer and magnifying-glass are combined with a holder for a pencil case, watch key, &c., or with a locket or other trinket. One method of effecting this is shown in the Figure, in which A is the thermometer, sliding in the case B provided with a lid in which a magnifying-glass C is fitted so that it can be utilized for reading the degrees on the thermometer scale. When combined with a locket the thermometer tube is arranged in the form of a volute with the bulb in the centre.

10,226. Edwards, B. J. July 16. *Drawings to Specification.*

Magic-lanterns.—The object is to rapidly change the pictures in the lantern during an interval of darkness caused by the covering of the lens. Two diaphragms with concave ends are arranged to slide vertically in opposite directions in front of the lens, so that when in their extreme positions their concave ends form a circular aperture through which the light can pass. One end of a cord is fixed to one of these, and then passed round a pulley above worked by a lever, and the other end fixed to the other screen. The spindle of the pulley carries a one-toothed cam, gearing with a catch on a spindle above, as in the Geneva stop. A lever fixed to this spindle is slotted at its lower end, and in the slot works a pin attached to a horizontally-sliding carrier, suited to hold two pictures. By turning the lever the lens is thus covered by the sliding diaphragms, the slotted lever slides the carrier so as to change the picture, and the lens is again uncovered.

10,231. Cox, J. B. July 16.

Pyrometers.—A long fine tube A of heat-resisting material is connected with a U-tube, one end of which is open to the atmosphere, the other being closed by the stopper C. This stopper is unscrewed and mercury poured in to the zero point; C is then screwed in again and the pipe A inserted in the place where heat is to be tested. The expansion of the air then moves the mercury column. If B be made of opaque material, a float is used protruding from the end of B. In some cases the U-tube may be dispensed with and a single tube passed down nearly to the bottom of a wider tube into which the mercury is poured.

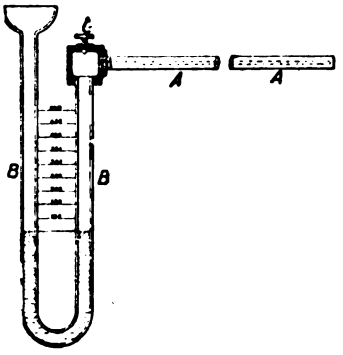

11,066. Parker, T. Aug. 8.

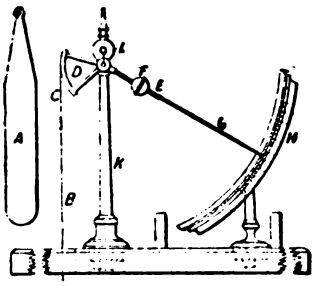

Specific-gravity estimating apparatus.—The apparatus, which is on the principle of the hydrostatic balance, is specially intended for indicating the condition of secondary batteries; it may also be used to determine specific gravities in the ordinary manner. A glass bulb A, loaded with shot or mercury, is suspended in the cell by a platinum wire B attached to a silk thread C passing round a quadrant D. This forms one arm of the balance; the other arm E is screwed and carries an adjustable counterweight F and pointer G, moving over a graduated scale H, which may show "ampère-hours" &c. The whole is suspended from a standard K by silk threads L. As the battery is charged the specific gravity of the liquid increases and the pointer falls; as it is discharged the pointer rises. Contacts may be arranged on the pointer to cut out the dynamo when the cells are sufficiently charged, or to signal when the battery is exhausted.

11,128. Carter, W. Aug. 11.

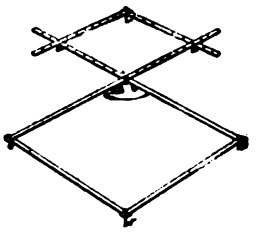

Pantographs.—The instrument consists of six pieces of wood pivoted together as shown. The fixed point is at the middle of the instrument, the tracer and marker, which are interchangeable, being on opposite sides. The rods are connected by screw eyes which serve also as supports, and the rods on one side of the fixed point being pierced with holes at set distances apart, a drawing can be enlarged or diminished to any desired scale.

Digitized by Google

11,179. Stromeyer, E. C. Aug. 12.

Thermometers and pyrometers.—The object is to indicate strains, *i.e.* minute deformations of solids, produced by variations of stresses, temperatures, or other causes. The apparatus consists essentially of two plates between which rolls a spindle with an index. The plates are attached to the two pieces of metal constituting the thermometer. The amount of deformation is thus communicated to the plates and is indicated by the spindle and index hand.

11,279. Willis, G. R. Aug. 14.

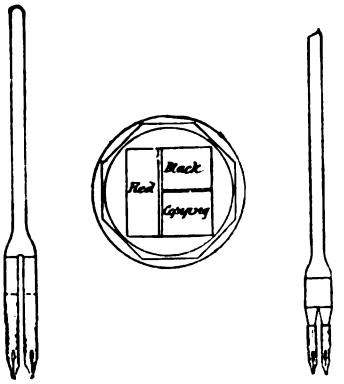

Ruling-pens.—The holder is arranged to carry two nibs, with points inclined to each other in plan at an angle of about 120° so that while one nib is in use the other is out of the way. The Figure shows two forms of holders for this purpose, but others slightly modified may be used. Or a nib with two points may be manufactured to fit an ordinary holder. The inkstand shown is divided by thin partitions in order that one nib may be dipped in one sort of ink while the other is dipped in a different kind.

11,284. Jensen, P., [*Hult, O.*]. Aug. 14.

Logs. — A pipe, passing through the bottom of the ship, is provided with a small hole A at the side, up which the water is pressed by the motion of the ship. The water rises up the pipe C and compresses the air in a vessel D, from which a small pipe E leads to a gauge in the cabin or elsewhere. This gauge is similar in construction to an aneroid barometer and is regulated for different depths of load-line.

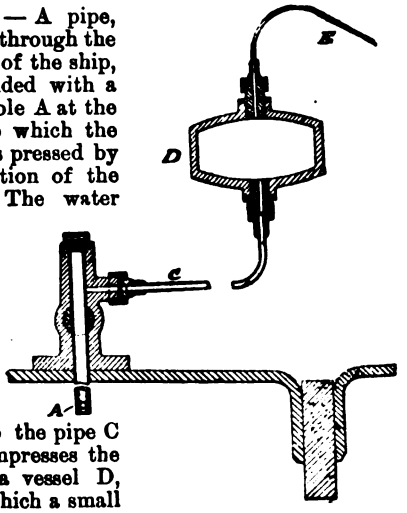

11,469. Edwards, G. Aug. 20.

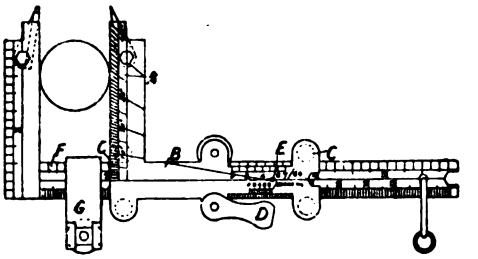

Squares; plumb-rules; clinometers; compasses or dividers; protractors.—Relates to callipers and sliding calliper squares, which may also be used as plumb-rules, protractors, compasses, &c. The Figure shows one of the many forms which the calliper square may take. The slide B touches the square at the ends C only, and may be fixed in any position by a tightening-lever D. The slides and jaws are graduated in any convenient way, for instance, the jaw A may be graduated as shown, so that, by attaching a plumb-bob at E, the instrument may be used as a clinometer or plumb. A stop G is adjustable on the arm F, so as to prevent the jaws from closing more than a certain distance; by this means a workman may test his work while it is revolving without stopping the lathe. The ends of the jaws may be fitted with a folding point and pencil for use as compasses. The metal of which the instruments are made may be fluted or ridged to give stiffness and strength. Single and double jointed callipers of the ordinary type are also described. These are, in some cases, formed also with compass points which are protected by the calliper heels when the instrument is folded up. They may also be fitted with arc-shaped connecting bars, with sliding stops, which may be graduated, and they may be adapted to serve also as squares and bevel gauges.

11,603. Wilkinson, A. Aug. 25.

Compasses, magnetic.—Attached to a compass for use in sketching, surveying, &c. is a clamp by which it may be fitted to a field or sketch-book. The compass can revolve stiffly in its clamp so as to adjust its meridian as desired.

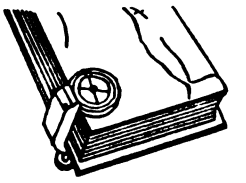

Digitized by Google

11,698. Thomas, H. E., and **Shrader, J. C.** Aug. 27.

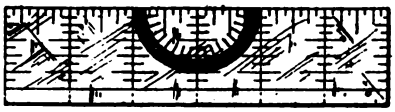

Scales; protractors.—The scale is made of glass, graduated at the edge. Lines are also marked on the underside, across the scale, and a protractor is provided at one edge at the centre.

11,710. Boult, A. J., [*Frank, L.*]. Aug. 27.

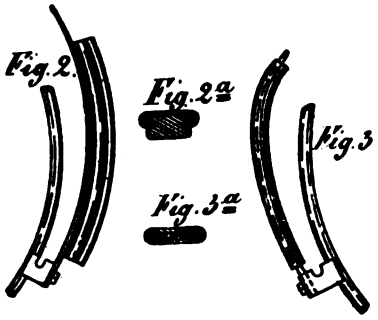

Spectacles and eyeglasses.—The bridge of spectacles, or the plaquet of folding eyeglasses, is provided with an elastic covering to relieve the pressure on the nose. India-rubber may be inserted in a groove in the bridge or plaquet as in Figs. 2 and 2^a, or may entirely surround it as in Figs. 3 and 3^a.

11,962. Meager, R. Sept. 2.

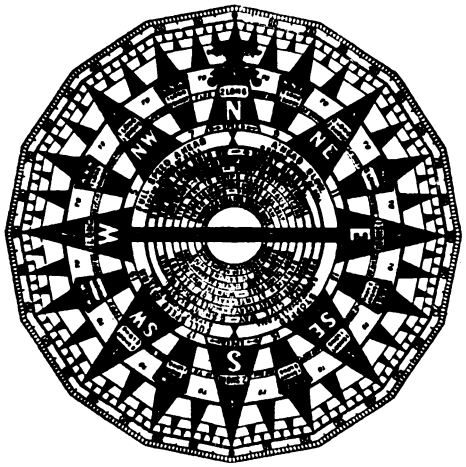

Compasses, magnetic.—The card is made polygonal in shape to facilitate the reading, and is divided by a transverse band to separate the northern from the southern points. On the card is printed a code of fog signals.

12,046. Herrmann, I. Sept. 5.

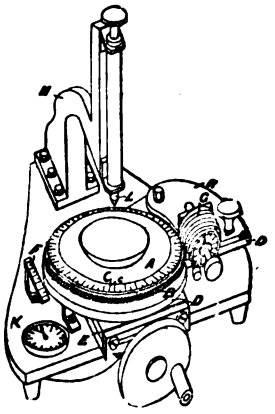

Angles and curves, plotting.—Relates to an instrument for setting off points the relative positions of which have to be obtained very accurately, as in marking the pivot-holes in the plates of watches, for setting out points in curved figures, or for copying, transferring, enlarging, or reducing such figure, or for dividing any straight line or circle, &c. The work is clamped to a platform A on a wheel B with 360 teeth, carrying a collar C divided into 360 degrees, and clamped to the wheel as required. The toothed wheel is free to turn on an arbor fixed to a platform D attached to a V slide E, so as to be capable of rectilinear motion, the extent of which is indicated on the scale F. Very delicate adjustment of the work is obtained, firstly, by the tangent-screw G, which is mounted on the platform H pivoted to D so as to be capable of slight movement to throw the tangent-screw out of gear; and, secondly, by gearing the platform with the pointer K in such a manner that every division it travels on the scale F will cause a complete revolution of the pointer. Some point is chosen as origin, and the work is then clamped so that the centering-spindle L, carried by the bracket M, comes exactly over this point, zero being shown on the various scales. By advancing the V slide and turning the toothed wheel according to the given co-ordinates of the points to be obtained, the work is moved into positions for the points to be marked by the centering-spindle.

12,088. Vaughan, J., and **Williams, J. A.** Sept. 6.

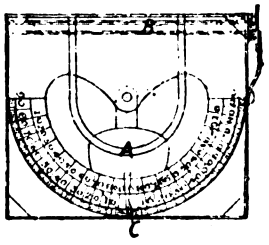

Quadrants.—Relates to a pocket quadrant consisting of a graduated semicircle, covered by a glass face, over which swings a plumb-bob A with index finger C. The plumb-bob can be set free by pressing a spring, and when an observation has been taken the spring is released and the bob held in position. Two shades are provided, one on each side of the dial, for taking the altitude of the sun, and a set of tubes B, fitting into each other, for observing the moon and stars at night, or elevated objects by day.

Digitized by Google

12,175. Cooke, C. F., and Cooke, T. Sept. 9.

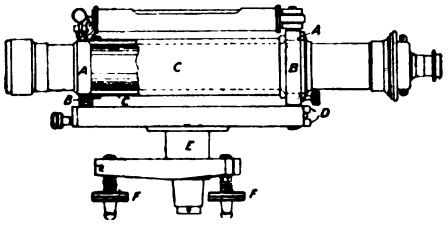

Levels.—The telescope is complete in itself and detachable, and is fitted with two flanges A, A of equal size to allow it to be inserted from either end. The flanges fit into two sockets B, B connected by a tube C and carrying a spirit level above. The telescope is adjusted at one end by the lock nuts D, the other socket being slightly rounded off and joined to the base by a screw. The vertical axis E is adjusted in the ordinary manner by the screws F.

12,329. Lyons, J. Sept. 12.

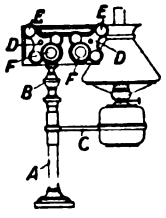

Stereoscopes.—The stereoscope is mounted upon a stand A with ball-and-socket joint B for changing its inclination. A lamp is carried by an arm C protruding from a sleeve on the stand. To the case of the stereoscope are pivoted two frames D, D, which carry pieces of coloured glass in circular apertures E. The eye pieces F, F of the instrument have slots in their sides, so that by turning the frames any desired piece of glass may be brought between the picture and the eye.

12,382. Boehle, H. Sept. 13.

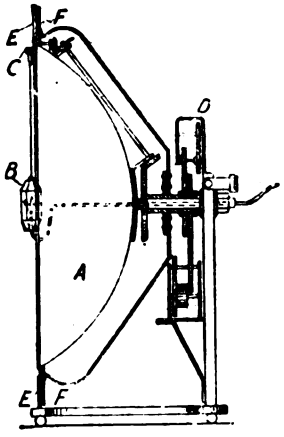

Reflectors; chromatropes.—The object is to obtain brilliantly-coloured effects, somewhat resembling fireworks, by means of an ordinary gas-light, lamp, or the like. A convenient form of the instrument is shown, though the details admit of considerable modification. The reflector A is made of a great number of small reflecting-surfaces turned in various directions; at its focus is the light B, which is surrounded by a transparent casing, formed of differently-coloured panes of glass. The case is suspended by a wire from a bevel-wheel C which is connected with a motor D, and so caused to revolve. The same motor rotates a ring F, placed behind a stationary ring E, and, the edges of both rings being cut into a pattern, the reflector itself appears to be rotating, while the revolution of the case causes constantly-changing coloured light to be thrown in all directions from the surfaces of the reflector. In a modification, transparent multi-coloured funnel-shaped pieces or discs may be rotated in the same or alternately-opposite directions between the flame and the reflector, producing a similar effect to the chromatrope.

12,585. Mackie, J. O'N. Sept. 19.

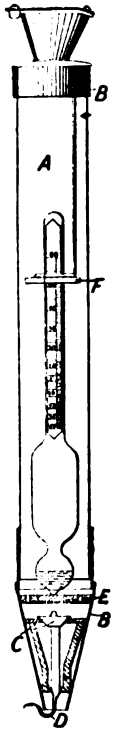

Specific-gravity estimating apparatus.—A glass tube A fitted with metal ends B, B has a valve C which opens and closes as the instrument is let down into or drawn out of the liquid, or which may be opened by the wire attachment D when required. A sample of liquid may thus be taken at any depth. Within the tube is inserted a hydrometer, which is supported by a cushion E and cushioned guide F. The bulb of the hydrometer is elongated to suit the shape of the glass vessel, and a thermometer is fixed inside it. The instrument may be modified for use in the laboratory, or made telescopic if required to be carried about.

12,855. Watts, W. Sept. 27.

Tripod stands for cameras. The upper part A of the leg of the tripod is a tube in which a wooden bar B slides. The tripod when folded assumes the shape of a walking-stick C. The cross-section of each tube is triangular, to enable them to fold well together. The upper ends

Digitized by Google

of the sections are held together by a suitable cap D. The tripod top E is made of two pieces riveted together; the outer ends of the arms are jaws in which staples at the ends of the tripod legs are inserted. The end of the solid tube is split and a spring inserted to press it out, to produce the necessary frictional resistance.

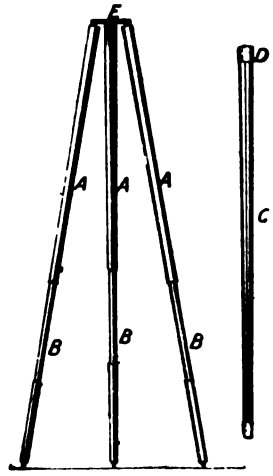

12,952. Swift, J. Sept. 29.

Microscopes.—The coarse adjustment slide A supports the fine adjustment slide B so that in adjusting delicately the optical tube is moved as a whole.

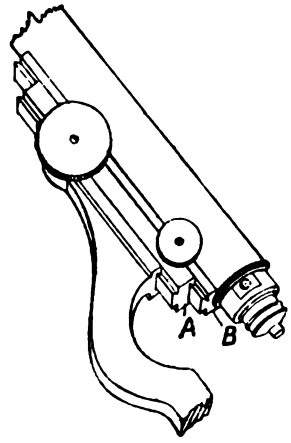

12,991. Smith, C. Sept. 30.

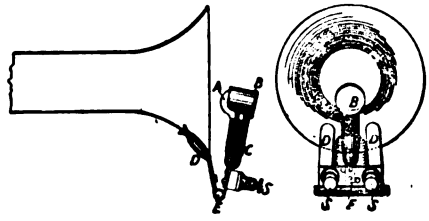

Microscopes, electric-light attachments for. The Figure shows the application of the invention to a speculum, but it is stated to be applicable for microscopes. A small incandescent lamp A is partially enclosed in a metal casing B, and carried by a holder C attached by a ball-and-socket or other joint to a plate F which is hinged at E to a piece D which clips the edge of the speculum, or the piece D may be replaced by a set-screw, or a ring which fits round the edge; coils of wire connect the binding-screws S with the lamp. The double joint permits a delicate adjustment of the lamp.

13,044. Calliburces, P. Oct. 1.

Hygrometers; weather indicators.—The essential feature of this invention is the construction of a "spring" composed of a combination of any elastic and non-hygroscopic substance, with some hygroscopic substance. The effect of varying degrees of moisture on this compound spring is to cause it to coil or uncoil, and thus by an index to show the hygroscopic condition, either of the surrounding medium or of the substance forming part of the spring. Various forms of instruments are described, of which one is shown by the Figure. A helix of india-rubber is coated with any hygroscopic material whatever and is suspended from its upper end, a small index ranging over a scale at the lower end. The base has a hole which may communicate with one of two openings below, one containing water and the other a drying-agent such as chloride of lime. By observing the deflection of the index between complete dryness and complete saturation, for different materials with which the helix may be coated, the hygroscopic character of the materials can be determined. By keeping the helix open to the air, the instrument may be used as an ordinary hygrometer. Various other forms of springs are described in the Specification, which also enters at some length into the experiments, pathological as well as meteorological, for which the invention may be used.

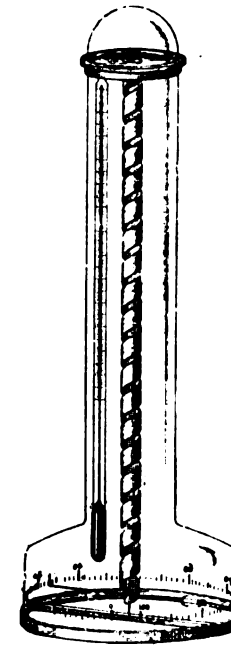

13,182. Davis, H., and Davis, A. Oct. 4.

Anemometers.—Relates to speed-indicating apparatus. Upon the end of the axis A, which carries the rotating vanes B, a disc C is fixed having a projecting pin. The spindle of the index-finger D is made square at its end, and a boss E slides upon it which is normally pressed to the left by a flat spring, but forced in the other direction, on pushing the knob G,

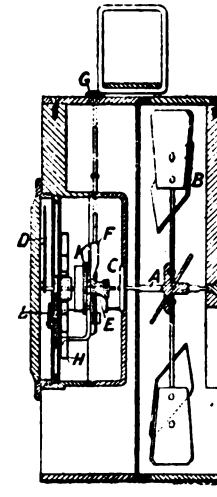

Digitized by Google

by the wedge-piece F. In the latter position a pin on the boss is caught by the pin on the disc, but its revolution is opposed by a spiral spring H attached to the index-finger spindle and casing. To use the instrument the vanes are allowed to attain full speed and the knob G is pressed; D then rotates until the tension of the spring balances the air pressure. The return of the pointer to zero is prevented, until desired, by a detent engaging with a ratchet-wheel K on its spindle, which is lifted when G is released. A second pointer L is geared with D to show whether the latter has revolved more than once.

13,220. Myers, L. Oct. 6.

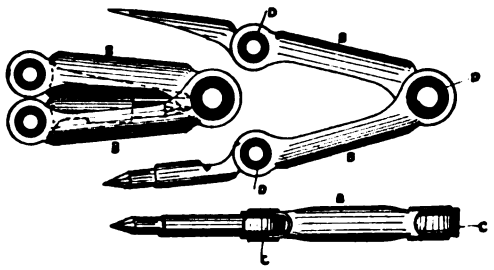

Compasses and dividers.—The various limbs are cut out of sheet metal and the blank is stamped into form, and fitted together by eyelets D, D, or screws or rivets. The links B, being U-shaped, admit of the other limbs being folded into them. The washer C keeps apart the forks of the joint. The end limbs are so arranged, in some of the modifications, as to make one pair of compasses act both as dividers and ink and pencil compasses. The points are made of hollow triangular cross-section for the purpose of strengthening them.

13,288. Bolton, T. Oct. 7.

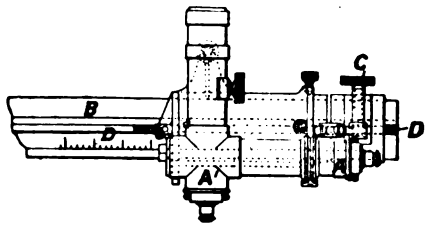

Telemeters.—At each end of a graduated bar supported by two tripod stands are mounted a pair of telescopes, one pair being correctly at right-angles and capable of only a slight adjustment motion, the other pair being at an angle very nearly a right-angle and capable of motion along the bar. The Figure shows the latter pair, the two telescopes A, A^1 being moved along the graduated bar B by the pinion C and rack D. To use the instrument the telescope A and the corresponding one at the other end of the bar are collimated, and the other pair are then caused to sight the distant object and bisect it with their cross-lines. The range is then shown by the distance separating the telescopes on the bar. Both pairs of telescopes are fitted with adjusting-screws &c.

13,313. Mackay, R. F. Oct. 8.

Rulers.—An ordinary round ruler has pivots B at its ends by which it is attached to the side blocks C of the metal piece D, and rotates independently of it. The piece D carries a longitudinal enlargement E, against which the pen bears during the operation of ruling. The top of the piece D is at about the same level as the ruler, to enable the fingers to press upon the two simultaneously. Openings F are provided through which the ruler may be grasped and removed without soiling the fingers by contact with the piece D.

13,366. Massey, J. E. Oct. 9.

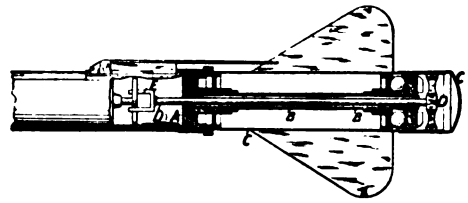

Logs; sounding-apparatus.—A hollow tube B is fixed to the fore-bearing A in which the rotating tube C turns, and carries at its end a nut cap, between which and the rotating tube are anti-friction balls. Through the hollow tube B and bearing A runs an axial spindle D, fixed to the rotating tube and having a crosshead E which actuates the registering-mechanism contained in the fore-part of the log. As a modification, B may be solid, and a cam at the end of the rotating tube arranged to push back at each revolution a spring-controlled rod, working in an eccentric cylindrical hole in A. To this rod is attached a pawl which actuates the registering-mechanism. For sounding purposes, the case of the log is clamped to a bow-shaped metal frame with eyes at each end to which are fixed the sinking weight and line, or the frame may carry a cylindrical holder containing the log, its ends being sufficiently open for the free passage of the water.

Digitized by Google

13,371. Hughes, W. C. Oct. 9.

Magic-lanterns.—Relates to an improved construction of the lantern

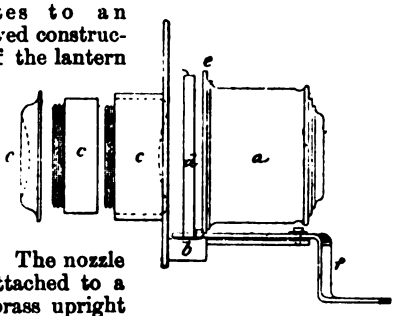

front. The nozzle *a* is attached to a solid brass upright plate *e*, firmly held by the brass ground plate *b*, so that insertions can be made from the top if required. A brass frame *d*, with two compartments brought alternately before the lantern by the lever *f*, carries large pictures. There are small adjustable frames, to fit the compartments, for small pictures. The condenser *c*, *c*, *c* is made in several joints so as to be capable of extension to 10 or 12 inches.

13,372. Hughes, W. C. Oct. 9.

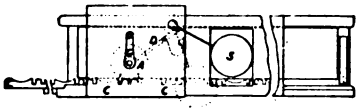

Magic-lanterns.—Relates to a slide-carrier moved by the segmental wheel A working in the rack C, C, C. While the picture is changing the shutter S is raised in front of the lantern nozzle, by means of the connecting-rod D fixed to the eccentric G, and so the light is shut off. Where the frame has only two compartments, the shutter is attached directly to the spindle of the segmental wheel, which is moved alternately to the right and left.

13,454. Cooper, A. J., and **Wigzell, E. E.** Oct. 11.

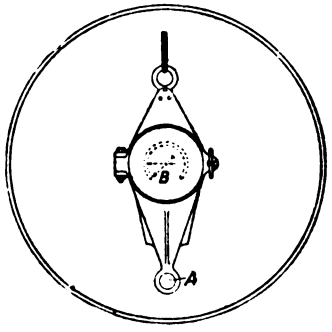

Sounding-apparatus.—Within a water-tight case, shaped to offer small resistance, is placed a pressure gauge of the Bourdon type, the water being allowed to enter through a hole at A to act on the pressure chamber. The depth is registered by the pointer B, which is carried forwards as the pressure increases but does not return. To the bottom of the sounder is attached an instrument with a cup, closed automatically by a lid as the sounder is raised, for bringing up samples from the bottom.

13,547. Batty, W. Oct. 14.

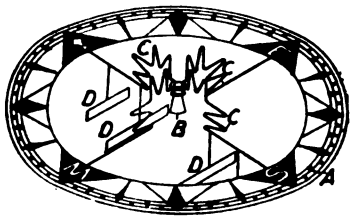

Compasses, magnetic.—The card is fixed to a thin wire framework A connected with the central support B by thin wire bridges C resilient vertically and horizontally. From these wires the magnets D, D are suspended by clips. The communication of vibrations from B to the card is thus lessened, and it is still further reduced by attaching a light tubular flange, preferably of paper, to the inner edge of the card.

13,964. Harild, H. Oct. 22.

Compasses, magnetic, determining deviation of. A balance rod A swung on gimbal rings carries a standard B and crosshead C, to which the compass card may be clamped, and upon which is a spirit level D. An arm is pivoted to the head of the standard B with a socket for a screw rod E. To this arm is fixed the vernier-marked circle F, while the graduated annulus G is attached to the standard. Upon the rod E screws a "shadow circle" H and a conoidal piece K graduated for 24°, upon which the shadow of the circle H is to fall. The action is as follows:—The compass card is clamped to the crosshead, so as to make the angle of "variation" with a line marked "ship's head" on the inner gimbal ring. The arm E is then raised until the latitude is shown on the dials, and clamped in position, and the card is levelled by means of the screw-weights L. The apparatus is then turned round until the circle H throws its shadow on the graduation corresponding to the declination for the day. The true magnetic course is now shown by the "ship's head" point, and the difference between this and the ship's head by compass is the deviation. Sometimes a screw-ball is used instead of the conoidal piece, and in this case the

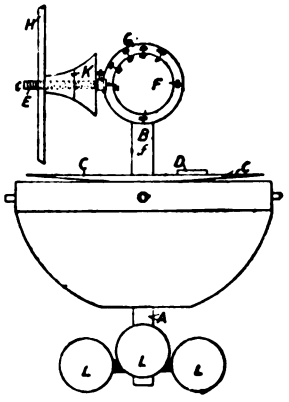

Digitized by Google

apparatus is somewhat different in other respects. When the sun is not bright enough to cast a shadow, a tube with cross-wires is used to "sight" it, instead of the screw-arm and shadow-circle.

14,060. Downing, G., [*Sleator, R. L.*]. Oct. 23.

Compasses, magnetic. — The compass card A is mounted in the usual manner, but the bottom of the box is of transparent material, and the top is capable of holding an adjustable lamp B, provided with the lenses C, C, and a reflector D (in the shape of a frustum of a cone) forming a receptacle for oil for the wicks E. At the bottom of the box are the lenses F, so that an image of the card, which is transparent in the centre with the figures painted round, or opaque with the figures cut out, is thrown where desired, in the manner of a magic-lantern picture. The card may have an annulus of opaque material around it, with the signs as usual, so that the lamp may be removed and the compass used in the daytime as an ordinary compass.

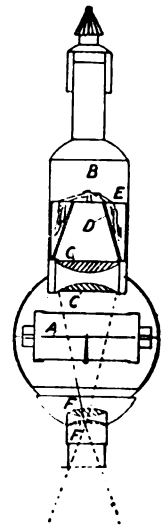

14,286. Michell, F. B. Oct. 29. *Drawings to Specification.*

Compasses, drawing.—In copying-apparatus where a stencil is prepared by pressing with an instrument on prepared paper placed on a file surface, compasses may be used having one leg ending in a wheel or rounded point.

14,405. Warner, W. R. Oct. 31.

Rulers.—Relates to a method of teaching music. Musical scales, signatures, &c. are printed, embossed, or otherwise shown on rulers and other articles used by school children.

14,457. Green, C., and **Füidge, L. V.** Nov. 1.

Actinometers.—A metal box A, preferably circular and of a size to suit the pocket, is provided with a perforated lid B, through which a graduated scale of tints can be seen, these tints being generally painted on porcelain. One perforation C extends also through the porcelain plate, below which is a piece of sensitized paper. The actinic power of the light is estimated by observing, in reference to the scale of tints, the colour the paper assumes after a certain time of exposure. An opaque plate is put below the sensitized paper, so that several sheets may be kept under it in A, without fear of their being damaged.

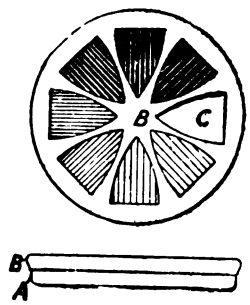

14,507. Tinne, T. F. S. Nov. 3.

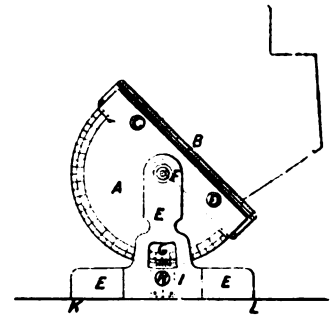

Scales and protractors.—To the stock E is pivoted at F a protractor A, on the straight edge of which a part scale B is secured by thumb-screws C, D. A hole in the stock permits the protractor to be adjusted by means of its divided edge and the vernier G on the stock. A line can then be drawn of the required length, and at any required angle with the edge K, L of the stock, which is held against the edge of the ruler or T square. A flat spring I under the stock presses the protractor firmly against the stock, and holds it in position; on pressing the button H, the protractor is freed from the spring, and can be adjusted.

14,699. Bayley, T. Nov. 7.

Polarizers.—Instead of the usual half-wave plate of quartz, a thin sheet of mica is mounted between two sheets of glass, and placed between the polarizing and analysing prisms, so as to cover a portion of the field of vision.

14,862. Spink, W. Nov. 11.

Compasses, magnetic, ascertaining deviations of. The box A is hung on gimbals and carries a vertical spindle B the top of which forms a pivot on which revolves the hollow spindle C, which carries the pointer D. The spindle C carries a loose sleeve E to which is attached a dumb compass card F. The spindle C also carries either a

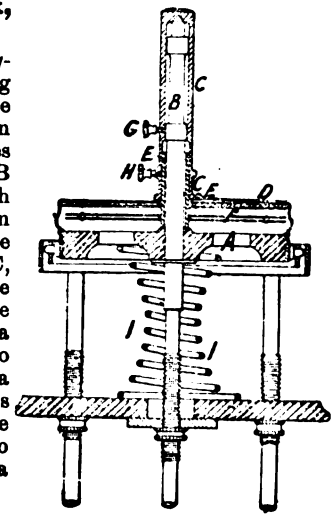

Digitized by Google

vane or a lamp the chimney of which is bent at right-angles, the direction of the wind being indicated by the smoke issuing from it. Set-screws G, H respectively fix the hollow spindle C to the spindle B, and the sleeve E to the spindle C. To use the instrument the ship's head is turned to the east, for example, and the dumb card having been disengaged from the spindle C is set to the same point. The pointer is then turned to the direction of the wind with the aid of the lamp or vane. A similar series of operations is repeated with the ship's head pointing to the west, and the mean of the two readings gives the magnetic direction of the wind. The card is then fixed in such a position that the pointer indicates this mean. By placing the ship's head at any point of the compass by the dumb card when fixed to the spindle C the correct magnetic course to steer by the aid of the compass is indicated, while the smoke travels in the line of the pointer. The box A is kept horizontal by a heavy weight attached to the lower end of the spindle B, and steadied by the spring I.

Bearings, instruments for determining. — The above-described apparatus may also be used as an azimuth instrument for taking bearings.

14,951. Wright, L., and **Newton, H. C.** Nov. 13.

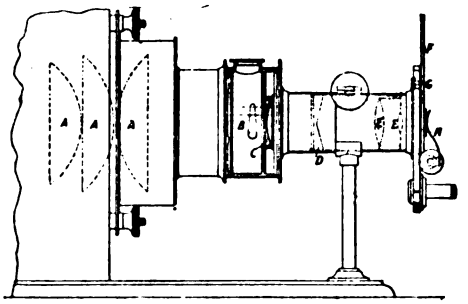

Lantern-microscopes.—In order to obtain a more clearly-defined image, and prevent the damage of delicate balsam-mounted slides by heat, the rays from the lamp are passed through the condensers A and into the alum trough B, after which they are rendered parallel by the plano-concave lens C, which is balsamed to the alum trough to stop the balsam-heating rays and avoid loss of light at different surfaces. For showing opaque objects a coned or prismatic lens D is inserted to split the central beam, part of which would otherwise be lost. The ray then passes through the condensers E and so through the stop-diaphragm F to objectives, the curves and the distances apart of which are worked out on the screen to produce a flat picture and pass the greatest amount of light. The stop-diaphragm can be rotated about the point G so adjusted as required, and the slides are fixed to it by spring fingers H, instead of having a separate stage.

15,198. Ashford, J. Nov. 19.

Tripod stands for photographic cameras and similar purposes. The head is of the usual triangular form. Each projection is slotted horizontally from the outside, the slot ending in a larger circular recess. On the upper end of each leg of the stand, an oval pin is fixed with the longer diameter in the direction of the length of the leg, its smaller diameter being rather less than the width of the slot. The leg being in a horizontal position the pin may be inserted through the slot into the recess, where it may be turned into the standing position. The slot may be made without a larger recess at its inner end; in this case a spring is attached to the underside of the head, its outer end being turned up so as normally to close the slot. It is formed with an inclined-plane end so that a round pin on the leg may be pushed into the slot, the spring rising behind it to prevent its release.

15,440. Gray, C., and **Kemp, H.** Nov. 24.

Magic-lanterns.—Relates to slide holders. Two or more slides are placed one above the other as shown, or side by side, in a frame which occupies the position of the ordinary slide holder in a magic-lantern, but is made to slide either horizontally or vertically or in any other convenient direction. While one of the slides is being exhibited the other can be exchanged for a fresh one. The sliding holder can be fixed in the position necessary for the exhibition of the slides by a spring catch on the lantern.

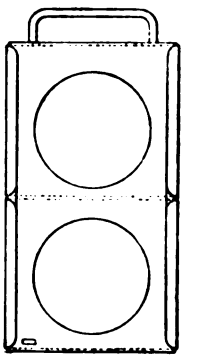

15,947. Murrie, J. Dec. 4.

Thermometers for use with high temperatures, and for recording at considerable distances if required. With these objects in view the vertical tube A is of considerable length and is connected by a short tube B with an iron or steel chamber C. The instrument may thus be readily put through the wall of an oven or the like. The tubes terminate in a short glass tube D to which a scale is attached, which may if desired be connected with a pressure

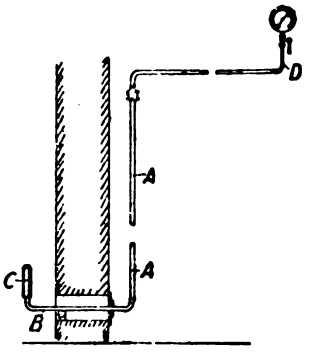

Digitized by Google

gauge, and between A and D any length of tubing or a series of U tubes may be inserted. The liquid used is principally mercury, though water may fill part of the U tubes and should be placed between the mercury and the pressure gauge. Boiling is prevented by the great pressure caused by the length of the mercury column, and the resistance to expansion, the end of the apparatus being hermetically sealed, but containing air or gas. The temperature is indicated either by the height of the mercury or by the pressure shown on the gauge.

15,951. Reddie, A. W. L., [*Soc. Anon. Maison Bréguet*]. Dec. 4.

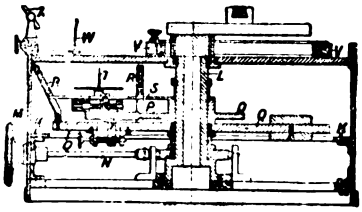

Compasses, magnetic, correcting reading of. The instrument is designed to calculate the true north from the formula—deviation $= A + B \sin z + C \cos z + D \sin 2z + E \cos 2z$, where A, D, E do not appreciably vary during the voyage, while B and C have to be determined from time to time, z being the true magnetic course of the vessel. A large ring K, marked with the compass points, but in the reverse direction so as to be correctly reflected in a mirror, is fixed in the case of the instrument, through which runs a central spindle L rotated as required by the key M on a spindle N suitably geared with L. On this central spindle is mounted a graduated toothed wheel O gearing with another P of half the diameter, the bearings of which are formed in a pointer Q pivoted on L and supporting the mirrors R, R. A second pointer S carrying a blackened point T is pivoted on L and provided with a slot through which passes an adjustably-eccentric crank on P. As the pointer Q rotates, P will thus both rotate with it, and vibrate about it. The top of the case is glazed, and above this a small ring V, with compass points marked reversely on its edge, can be adjusted as required by sliding blocks, and by rotating it in its mounting. The diameter of this ring is equal to the distance of the blackened point T from the central axis of the instrument. A second blackened point W and mirror X may be moved round the rim of the case and fixed where desired. The use of the blackened points is to get the reflections of the different ring graduations correctly aligned in any required manner. Two observations on different courses are taken from time to time in order to adjust the eccentricity of the crank on the wheel P to suit the varying values of the parameters B, C. This being done the instrument will give the deviation at once according to the formula.

15,970. Lux, F. Dec. 4.

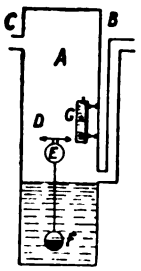

Specific-gravity estimating apparatus for gases and vapours. Within a tightly-stoppered glass bottle A, having inlet and outlet pipes B, C, is a liquid in which floats a hollow globe F weighted with mercury and connected by a very thin tube or bar (a hair or thread passing over a pulley may be substituted) with another hollow globe E. A graduated scale G is provided over which moves the pointer D attached to the globe E, or the scale may be marked on the connecting-bar in the manner of an ordinary hydrometer. By this arrangement the specific gravity of gases may be estimated as they flow through the bottle at known pressure, by observing where the pointer stands on the scale.

16,029. Nordenfelt, T., [*Middelboe, C. G.*]. Dec. 5.

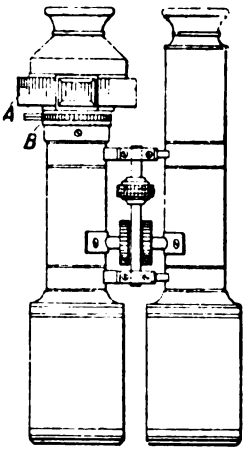

Telemeters.—Distances are found by observing the angle between the object and the horizon from a known height above the sea level, thus obtaining a right-angled triangle of which one angle and a side are known. The scales of the instrument are graduated in distances corresponding to various heights to save the trouble of calculating. When applied to a binocular, the angle is measured by parallel wires focussed in the eyepiece and under the control of a cam by which they can be brought nearer to or separated from each other. The motion of the cam is produced by rotating the graduated ring A, from which the distances may be read off, until one wire corresponds with the water line of the object and the other with the horizon. The worm B is used for altering the zero point of the scale when land interferes with the view of the horizon. A modified form of the sextant is also used to obtain distances on the same principle. In this case one of the mirrors of the sextant is moved through a small angle by a radius arm or the like moving through a larger angle on a scale graduated to indicate the distance of the object.

Digitized by Google

16,054. Winstanley, D. Dec. 6.

Barometers.--The instrument is on the principle of the toy known as the "Cartesian diver" and consists, in the most usual form, of a globe A partly filled with air and having an aperture through which water can enter. This globe floats in liquid filling the tube B, and has a chain C attached which, as the globe rises and falls, increases or decreases the weight to be supported. The air pressure is communicated through the U tube D containing mercury, and by properly proportioning this part changes of temperature are compensated for.

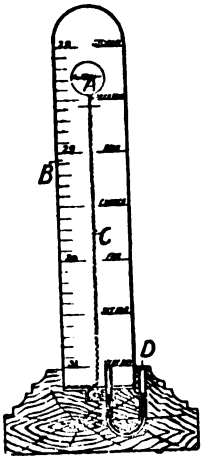

16,621. Murrie, J. Dec. 18.

Thermometers.—Relates to pressure gauges specially adapted for use with the thermometer described in Specification No. 9393, A.D. 1884, and arranged to show "the "pressure within the appa- "ratus corresponding to "the temperature to which "the said apparatus is sub- "jected." The apparatus consists of a long tube A, with a bulb at the end, within a liquid subjected to the pressure which has to be measured. The end of the tube A dips under mercury B, and the tube and bulb are filled with an elastic liquid, or with air or gas, so that the pressure forces the mercury up the tube. The effect of the bulb at the end is to cause the graduations on the scale C to be nearly equal.

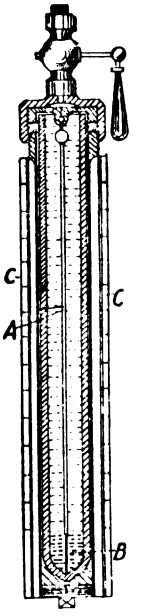

16,940. Baker, T. J. Dec. 27.

Calorimeters; thermometers.—The apparatus is used for determining latent heats, comparing specific heats, &c. It consists of two air vessels A, A, exactly similar, and with similar attachments. In each is a well B into which the substances whose properties are to be examined are inserted; the well has a stop-cock C and tube for drawing off liquid contents. The air vessels are provided with one or more stop-cocks D and communicate with the U tubes E containing coloured water, the levels of which on the scale common to them show the expansion of the air in A, A.

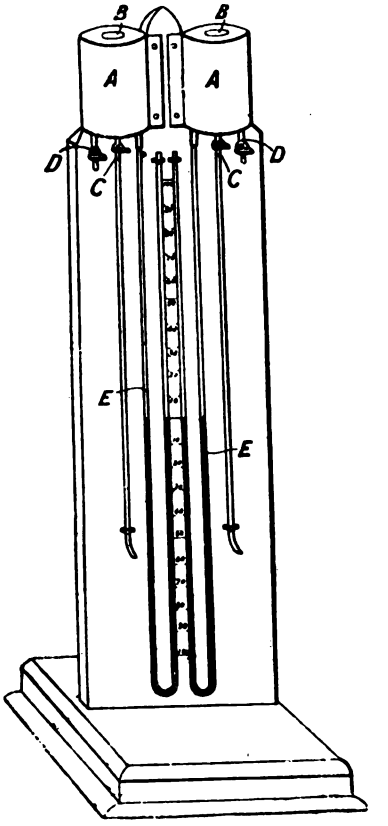

16,976. Jordan, J. B. Dec. 29.

Sunshine-recorders.—Within a cylinder of opaque material, closed at the ends, is placed a lining of sensitized paper. The cylinder is placed on a stand so as to be held at right-angles to the plane of the sun's apparent motion, and there are three holes in its sides masked by screens in such a manner that sunlight passes through the first from sunrise to 8 a.m., through the second until 4 p.m., and through the third until sunset, leaving a mark on the paper. The paper is ruled with parallel lines marked with the hours.

Digitized by Google

17,031. Thompson, W. P., [*Hazard, H. T.*]. Dec. 30.

Ellipsographs.—A bow-pen A is provided with an attachment B secured by the screw C and projections D. Through a channel in this attachment runs the cord E, the ends of which are fixed to the drum F, while the loop passes out close to the point of the pen and round grooves in the needle points of the dividers G. The length of the cord is regulated by turning the milled head of the drum. By a slight modification in the method of fastening the attachment may be used with a pencil.

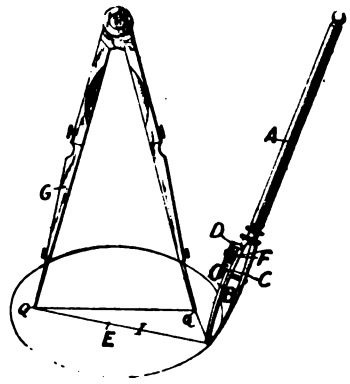

A.D. 1885.

18. Watson, W. Jan. 1. *Drawings to Specification.*

Compasses, magnetic.—A case containing a reel for a hat guard, which may also serve as a tape-measure, may be constructed to form a magnetic compass. The guard consists of a cord, band, ribbon, &c. wound on a reel, bobbin, &c. fixed permanently or detachably in various ways to a hat or coat. One end of the band is fixed to the reel, while the other is provided with a hook, bar, ring, clasp, button, or whistle which takes on or into an ordinary buttonhole, or on or into a special eyelet, ring, hook, or button placed on any convenient part of the dress, or on the other side of the hat to that on which the reel is situated.

303. Murrie, J. Jan. 9.

Thermometers. — The object is principally to prevent distortion in the receptacle for mercury or other liquid of the thermometer or pressure gauge described in Specifications Nos. 9393 and 15,947, A.D. 1884. The mercury in the receptacle A expands under heat or pressure against an elastic fluid in B, and so shows the temperature or pressure on the scale C. Around the receptacle A is put a jacket D filled with the same liquid, so that the pressure inside and out is equalized when heat is applied, and distortion prevented. If desired the elastic fluid in B may be forced in under pressure, so as to give a greater range of temperature to the same length of scale.

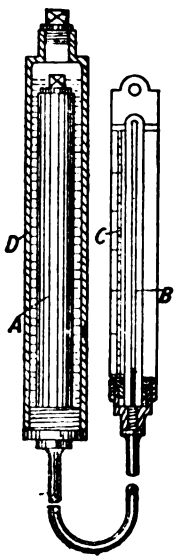

321. Horne, W. C. Jan. 9.

Compasses, magnetic. — The compass bowl is coated inside with luminous paint, and the card is made of talc, or similar transparent substance, the signs being printed upon it in black.

Digitized by Google

325. Beck, W. H., [*Capazza, L.*, and *Livrelli, P.*]. Jan. 9.

Railway and like curves, setting out; theodolites. — Relates to attachments to theodolites. Pivoted to the centre of the graduated telescope circle A is a bar B with two verniers C and D, and carrying a

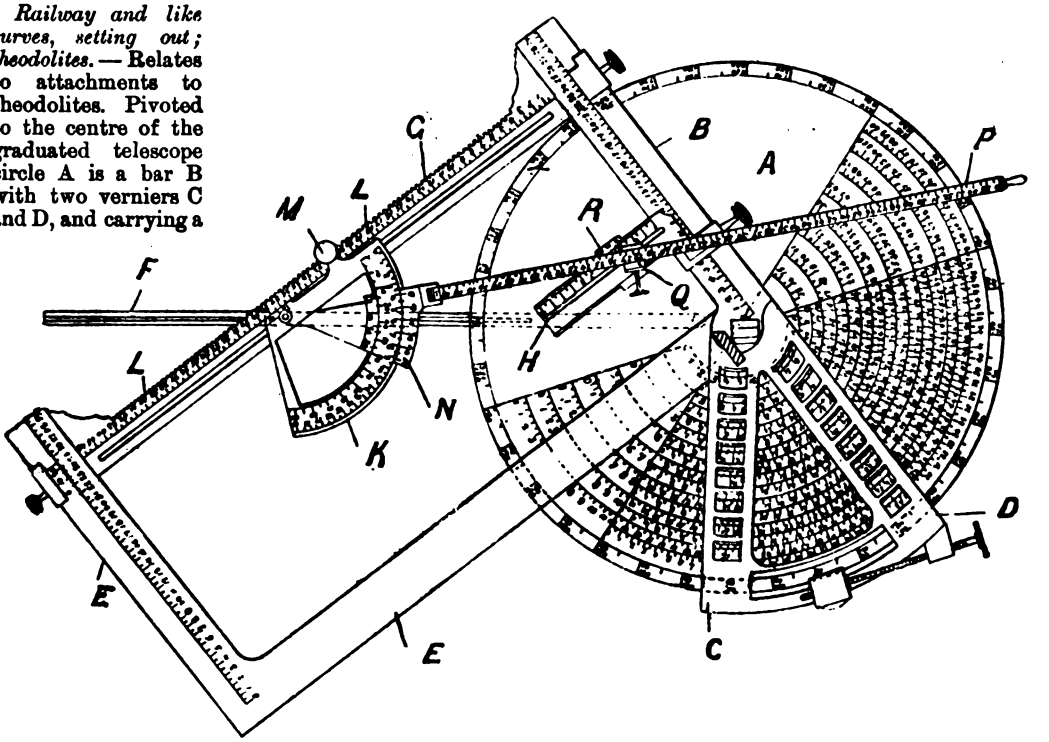

rigid frame E partly supported by the slotted arm F on the telescope stand. Upon this bar B slide two slotted bars G and H, the former of which carries an arc K movable along it by the rack L and pinion M. At the centre of the arc is pivoted a vernier N, the spindle of which passes through the slot in G into that in F; the straight-edge P is rigidly connected to the vernier, and the slide Q may be adjusted upon it, and fixed when required to a slide R on the bar H. The various parts of the instrument are graduated with some convenient scale. Having determined the angle between two lines of railway by the theodolite, and settled the radius of the curve to join them, this radius is set off on G by the centre of the arc K. G is then moved on B until the angle between G and F is half the supplement of the known angle. Lastly, the slides Q and R are connected, and, by moving the edge P round, the ordinates and abscissæ of any number of points on the curve may be read off at once.

---

665. Pratt, W. T. C. Jan. 17.

Binnacles. — Relates to improvements on the invention described in Specification No. 1416, A.D. 1882, where mirrors are used to reflect the image of the compass card from the bridge into the wheel-house. In order to prevent the deposition of moisture upon the mirrors, their surfaces are heated. For this purpose steam jackets, or receptacles for air heated by oil lamps, are placed adjacent to the mirrors, and a sheet of glass similarly heated is situated between the binnacle and the wheel-house.

---

914. Turnor, M. Jan. 22.

Compasses, drawing.—The long and short legs A, B of the compasses, and the holder C, are stamped from metal blanks. The legs are riveted together, and incisions D, D are made in the holder blank, after which it is bent into a cylindrical form, and the metal between the incision raised so as to form a hold for the tapered part E of the leg B. In another form the end of the short leg may be formed into a socket, and a reversible pen and

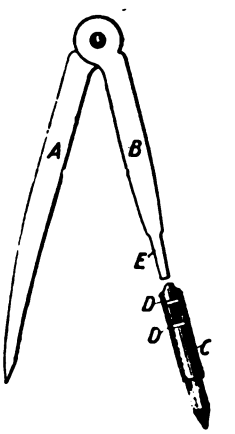

Digitized by Google

pencil holder used, or the pencil fitted in direct. Instead of the rivet, the joint may be formed by the closing over of an eyelet, and the heads of the compasses raised into hollow beadings. The legs may be formed with longitudinal hollow ribs raised in the metal to give them rigidity.

976. Pumphrey, A. Jan. 23.

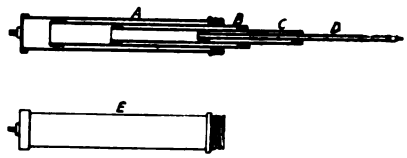

Tripod stands specially applicable for photographic cameras. Each leg is made up of several pieces A, B, C, D, with screws formed at the end of each length so that they can be screwed together. The screws may be put in as a bush or formed in the body of the tube itself. The lower extremity of the bottom tube D is made of a pointed shape ; the top is provided with a screw for attachment to the tripod top. When packed up, as at E, all the lower pieces fit inside the top piece, and a cap is screwed on to the end.

1027. Galland-Mason, R. Jan. 24.

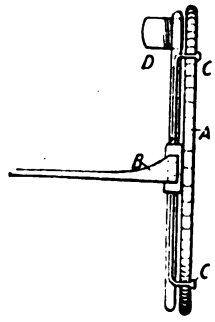

Microphotoscopes.—Relates to the invention described in Specification No. 912, A.D. 1884. A series of microphotographs are taken in a circle and mounted between two thin circular sheets of glass with transparent cement. This circular plate A can then be fitted to a pair of spectacles B or to a hand glass, the frame of which carries spring clips C, into which the plate can be sprung, and from which it may be readily removed. The edge of the plate A is milled so that it can be revolved to bring any of the microphotographs under the microscope D fixed to the frame. In another form the microscope may be attached to a radial slide and moved round as required over the photographs. The details of mounting may also be varied.

1045. Hempel, W. Jan. 24.

Thermometers for indicating when meat is sufficiently cooked. The larding pin or spit, used to pierce the meat being cooked, is made hollow, and a glass tube, containing some substance which melts about the required temperature, is fitted inside. The melting of this substance shows when the meat is sufficiently done.

1246. Ablett, T. R. Jan. 29.

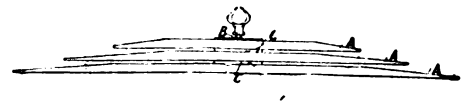

Colours, testing.—The samples are fixed to the bevelled edges of a series of discs A, A, A of different radii mounted on a common spindle upon which they can be revolved. Between the discs are plates C to allow of them turning easily. The coloured materials are held in the hand and the sample discs revolved until the required shade is found.

1411. Clark, A. M., [*Mayer, J.*]. Jan. 31.

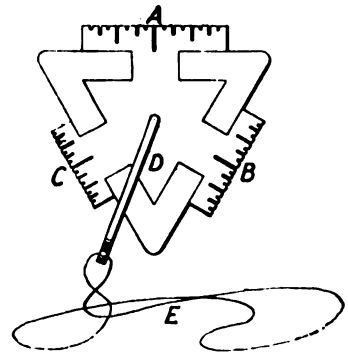

Range-finders.—This instrument consists of a triangular metal plate to which three transparent scales A, B, C are attached. The instrument being held at a distance of 56·25 centimetres from the eye, which is determined by the pivoted bow D and cord E, the scales are so made that a division subtends 4 paces, 4 men's breadth, 4 metres respectively at a distance of 100 metres. It follows then that, if a cross dimension of an object be known, its distance can be calculated by proportion by simply observing the apparent length of the cross dimension on one of the transparent scales.

1594. Robson, M. H. Feb. 5.

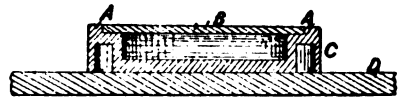

Microscope cells.—The cell is formed of any convenient material which will resist the action of the fluids used in the preparations, and is preferably constructed in one piece. A collar A is provided, to which the glass cover B is cemented, and an annular groove C runs round the cell to lighten it, and form a receptacle for cement when it is required to be fixed to the slide D.

Digitized by Google

1964. Evelyn, G. P. Feb. 12.

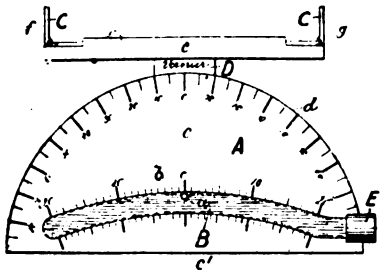

Clinometers; levels.—Relates chiefly to a combined clinometer and spirit level for use on ships, and in laying pipes and drains, elevating and depressing guns and howitzers, making stairs, pitching roofs, adjusting instruments, and other purposes. The Figure shows a simple form of the instrument. To a graduated arc A, in this case semicircular, is fixed a glass tube B, in the shape of a circular arc, forming the spirit level; this arc is also graduated. The usual sights and reading-adjuncts, such as C, C, are carried by a carriage D sliding in a groove, upon which a vernier scale may be marked. The end of the tube B is fitted with a screw-plug E, by which the liquid inside can be subjected to pressure; in this way the bubble is rendered more definite, and more accurate readings can be obtained. In a modification, the tube *a* is in the form of an arc of 90° and is mounted on a quadrant plate. In another form adapted for laying drains &c., the tube *a* is semicircular. To render the indexes of liquid levels, generally, more steady and accurate, the liquid is subjected to pressure in order to compress the air of the bubble and to cause the latter to become smaller and more spherical. This may be effected by means of a plug or cork fitting in one end of the tube containing the liquid, and adjusted by a screw-cap; in some cases a diaphragm of corrugated metal pressed on by a screw may be employed.

2027. Hicks, J. J. Feb. 13.

Thermometers.—The thermometers are filled in the usual manner, and a large chamber left at the top of the tube to prevent it from bursting in the subsequent operation. The tube is then sealed and annealed by immersing it for two or three weeks in an oil bath, or the like, kept at a temperature considerably above the highest temperature which the thermometer is required to register. This process causes the gradual contraction to which the tubes are ordinarily subjected to take place at once, and makes it possible to graduate them as soon as it is concluded.

2148. Hannay, J. B. Feb. 17.

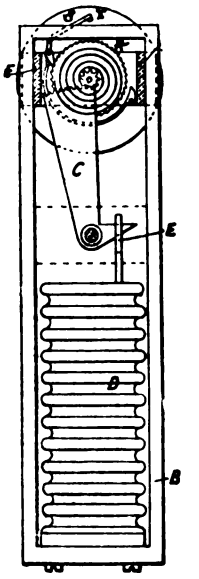

Sounding - apparatus.—Consists in improvements on the invention described in Specification No. 5256, A.D. 1883. The dial and its accessory working parts are fitted to a small frame fixed into the frame B so that they can be easily removed. The dial hand receives its motion from the teeth on the end of the arm of the bell-crank lever C connected to the corrugated vessel D by the pin E as shown. The dial is thus situated at the side instead of on the top as formerly. The frame B is surrounded by a suitable casing with an aperture for observing the dial, and around the upper part of this casing is a sleeve with a corresponding aperture, which can be turned either to expose the dial, or to close the aperture in the case. A special cord is employed for letting down the instrument, consisting of copper or copper alloy, preferably phosphor bronze.

2181. Boult, A. J., [*Westbrook, C. S.*]. Feb. 17.

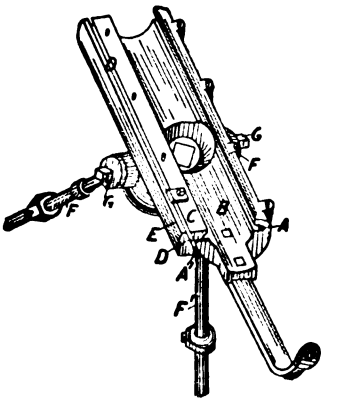

Tripod stands for rock drills. The rock drill is supported in parallel bevelled grooves A, A^1 in the cradle B, being fed by a screw in the usual manner. The bevelled piece C which forms the groove A^1 is attached to B by bolts and adjusted by a wedge-piece D between it and a rim E on B. The legs F, F, and F^1 are telescopic, the upper portions being solid and the lower tubular, and the upper and lower parts are locked together by set-screws passing through removable nuts in sockets at the tops of the tubular portions. Trunnions G, G, keyed into each side of the saddle or bed carrying the cradle, each pass through one of the collars on a fork at the top of the back leg F^1 and through a boss on one of the side legs F, F. The bosses of the side legs are pressed against the collars on the back leg, and these collars against the saddle to

Digitized by Google

lock the machine when adjusted, by turning inclined washers on the trunnions. The legs and washers are locked on the trunnions by gibs and keys secured by set-screws passing through the ends of the trunnions.

2350. Clark, A. M., [*Favi, Paride, & Co.*]. Feb. 20.

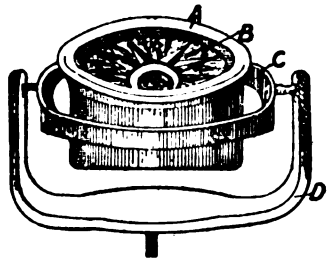

Compasses, magnetic.—The object is to neutralize the effect of surrounding iron and to concentrate the magnetic force. To obtain this result the box A is formed of cast iron, the card B of sheet iron, and the gimbal ring C and support D of wrought iron. In other respects the compass is of ordinary construction.

2372. Kinley, W. Feb. 21.

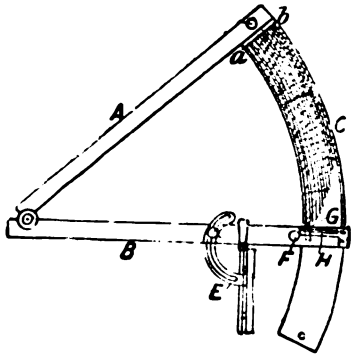

Angle-measuring instruments; squares.—Relates to an instrument for measuring the pitch of screw propellers, which may also be used as a square. The instrument consists of two jointed arms A, B, to the end of one of which A is fixed a graduated arc plate C. The other arm moves over this plate and carries an adjustable spirit level E which may be clamped in any required position by a screw and plate F. G is a pointer sliding in the slot H. The graduations are marked along concentric arcs, each arc corresponding to a particular diameter of the propeller, shown on the line *a*, *b*. The outermost graduation is in degrees. If the pointer G be set to the right scale, and the angle between the arms shows the angle of the propeller, the pointer will show the pitch of the screw. The arms A and B, when fully opened, form a square, and they may be graduated for use as measuring-rules.

2568. Frew, J. Feb. 25.

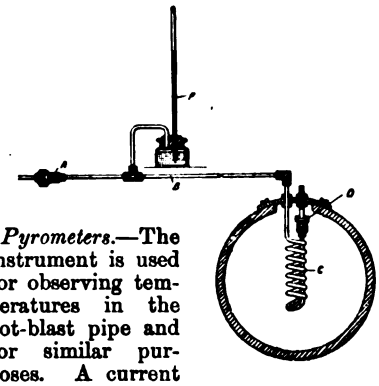

Pyrometers.—The instrument is used for observing temperatures in the hot-blast pipe and for similar purposes. A current of air is introduced, at a constant pressure and temperature, into a regulating-nozzle A, whence it passes along the tube B to a worm tube C in the hot-blast pipe, and out at the exit nozzle D. The expansion of the air in the worm forces a coloured liquid up the gauge tube F. The pressure of the introduced air is kept constant by a pressure-reducing valve, or by dipping a branch from the inlet pipe into water kept at a uniform level.

3162. Rawlings, J. P. March 11.

Logs.—The rotator is attached by a rope to the spindle A on which is fitted a steel disc B. The spindle passes into a cylindrical vessel in which is a corresponding steel disc C, between which and B are antifriction balls. The end of the spindle carries a pinion which gives motion to the registering-mechanism D.

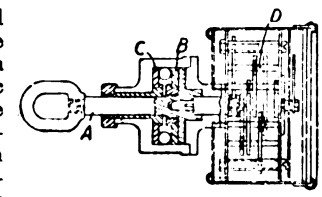

3221. Wright, C. F. March 12.

Barometers.—The fluctuations in pressure cause the length of the corrugated seamless tube A to vary, and motion is imparted to the pointer B by the link C and sector D.

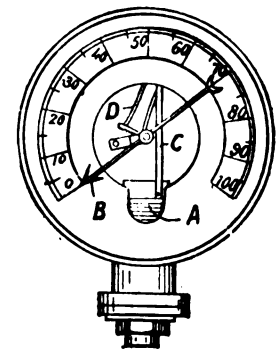

Digitized by Google

8536. Nevill, P. March 19.

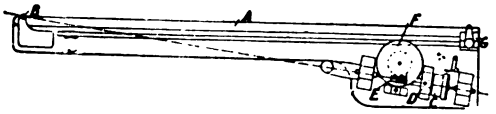

Angle-measuring instruments; surveying-instruments.—Relates to apparatus for measuring angles on plans &c., or on the field. Upon a straight-edge A, centered on the needle point B, is mounted the spindle of the roller C in adjustable centres always in a line with the centre B. The roller is graduated and a vernier D beside it allows of very delicate reading. The spindle of the roller carries a worm E gearing with a toothed wheel rigidly connected to the graduated dial plate F. A needle point for marking the angles measured is carried by the saddle G, which can move along the straight edge into any desired position. To keep the plane of the instrument constant, a third point of support, in the form of a rubber or roller, is provided not in the same line with the other two. By running the roller round between the boundary lines of any angle, a very accurate measurement thereof may be obtained. The apparatus may be adapted for measuring angles on a globe.

3598. Whiting, M. March 20.

Magic-lanterns.—A receptacle is placed at each end of the slide carrier, and in one of these the slides are placed vertically and pushed to the front by a spring. A plunger, provided with a stud, is moved backwards and forwards, and the stud catches the slides and places them one by one in front of the lens; each is then pushed on by the one behind it until it comes in front of the second receptacle, into which it is forced by a spring.

3656. Rogers, F. M. March 21.

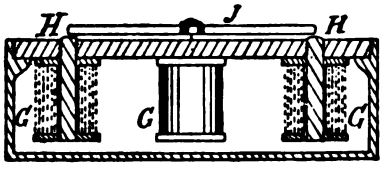

Wind vanes.—On the spindle of the vane is a contact-making arm which sweeps over a series of contact-points fixed in a circle to a non-conducting disc. The points are connected respectively with the series of electromagnets G in the indicator, and thence to one pole of a battery, the spindle of the vane being connected to the other pole or to earth. The bar J is supported so as to turn freely, and setting itself to the core of the magnet vitalized, shows the direction of the vane. The cores of the magnets are hardened at the tips, so as to retain a trace of magnetism after the current ceases, and so keep the bar in position until the next contact is made. When the vane and indicator are separated by a considerable distance a single wire is used and the contact-points connected to this wire through coils of different resistance. A light magnetized needle is pivoted near a coil formed from the single wire, and is deflected more or less according to the point with which the vane is making contact.

3701. Galland-Mason, R. March 23.

Spectacles and eyeglasses.—Small silvered reflectors A, A are cemented to the glasses of spectacles or eyeglasses to enable the wearer to see objects behind him.

3755. Taylor, H. D. March 24.

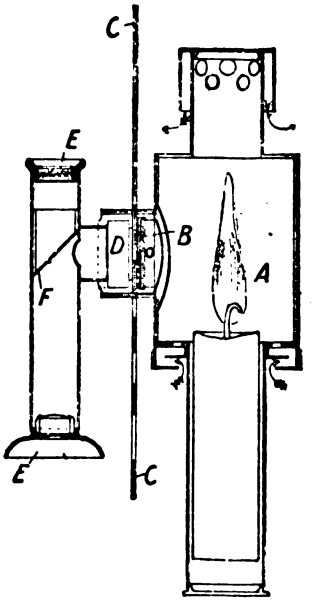

Photometers for photographic use. A is a light-tight lamp (holding a standard candle) with an opening in which is placed a disc of opal glass B illuminated by the candle. C is a sliding strip of metal with a graduated series of apertures to come over the opening in the lamp as required. A hollow socket D rotates stiffly within the tube carrying C, and the observing-tube E E is fixed at right-angles to its axis. Within the observing-tube is a diaphragm F perforated by a central hole round which is painted a white ring for receiving light from B. In one end of the tube E E blue glass is placed, so that only chemical rays of light pass through the aperture in F, while the other end is provided with a lens. In using the instrument, the observing-tube is directed towards any required part of the

Digitized by Google

subject to be photographed, and the eye observes a blue spot of light in the centre of F. The slide is then raised or lowered until the white ring is practically equal in brilliancy to this blue spot, and the number of the aperture which is then over the disc indicates the exposure required.

3777. Reed, A. H., [*Christian, T. G. R.*]. March 24.

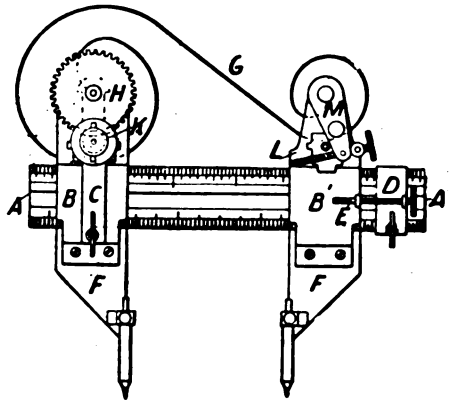

Mathematical drawing-instruments.—This instrument can be used for describing circles, ruling parallel lines, and drawing curves. Upon a graduated bar A are mounted two slides B, B', a portion C of B being capable of transverse adjustment. B is clamped into position by a thumb-screw. For delicate adjustment B' is connected to a piece D by a screw E and moved into its exact position after D has been roughly fixed. On each slide is a leg F which carries a pencil or needle point, and the edges of which may be used for drawing parallel lines. The upper parts of the slides are connected by a flexible strip G, the curve of which is adjustable. The proper strip having been selected, the curve is roughly shaped by turning the milled head K on the spindle of a pinion gearing with the wheel H, to the axis of which one end of the strip is fixed. Delicate adjustment is then obtained by the screw L which turns the arm M, and so the spindle to which the other end of the strip is attached.

3990. Dawson, A. G., and **Adams, F. E.** March 28.

Dividing-instruments.—Relates to a diagram or appliance for dividing straight lines into any number of equal parts. Upon a piece of paper or other fabric are ruled a number of lines converging towards a point and dividing a line A B into equal parts. It follows that the parallel lines C D, E F, &c., drawn at convenient distances, will be divided into equal parts, the lowest G H being such that the divisions are double those on A B. This diagram may be made on transparent material, or mounted upon rollers and stretched round a straight-edge, or in any way for convenience in applying it to a line which requires to be divided. The line is then moved until the right number of dividing-lines cross it, and their points of intersection are marked.

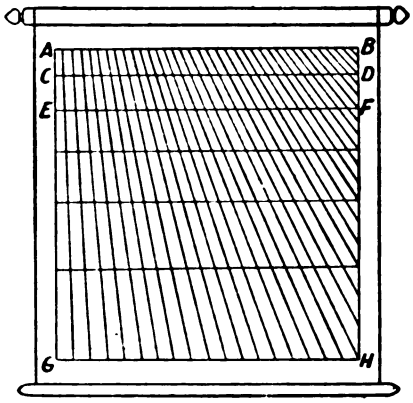

For convenience in size, the method of marking is sometimes somewhat modified, the principle remaining the same.

4086. Smith, W. T., and **Smith, C.** March 31.

Compasses, drawing.—Relates to a combined pen and pencil for compasses. A is a movable part having a pen B at one end, and solid lead C at the other. This may be inserted either way into the hollow tube or socket formed in one compass leg. The other leg is solid and sharpened to a point.

4354. Lazarus, M. April 8.

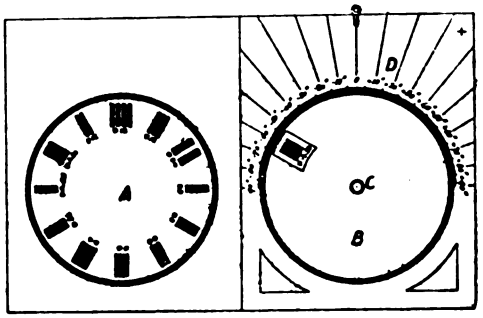

Sight-testing apparatus.—On a pivot C rotates a disc A, in front of which is a rotating disc B. The disc A, shown separately on the left of the Figure, has on its margin groups of lines intended to be viewed from different distances. These are seen

Digitized by Google

singly through the aperture in the disc B. The front disc can be turned through different angles relatively to a graduated back-plate D, so that cases of astigmatism may be tested.

4530. Stanley, W. F. April 13.

Protractors.—A flat ring A is concentric with, and can revolve upon, another flat ring B, and the rings carry triangular pieces C, D, with their vertical angles at the centre. B is graduated in degrees, and A with a vernier scale, the straight-edge used for ruling starting from the zero of each scale. These edges may be extended beyond the rings, as shown, if desired. One ring only with a second pointer on a sliding piece moving in an undercut groove may be used; or the instrument may be made less than the complete circle with a straight edge.

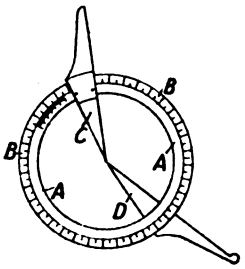

4582. Grace, G. P. April 14.

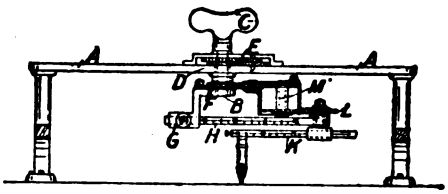

Ellipsographs.—In the centre of the frame A is a spindle B rotated by the handle C. Around this spindle is a sleeve D caused to rotate in the opposite direction three times as fast by the gearing E and carrying a wheel F at its lower end. The central spindle is attached to the piece G, upon which is an adjustable arm H at the end of which is a bearing for the spindle of a clamp, in which is adjusted the pencil arm K carrying at its upper end a wheel L equal to F. L and F are connected by toothed wheels on a linked frame M which allows of the horizontal distance between L and F being varied according to the ellipse to be described. By means of this gearing the arms H and K are caused to rotate in opposite directions at equal speeds and an ellipse is described. In another form L and F are connected directly and the eccentricity of the ellipse is altered by changing these wheels. Sometimes the gearing is so arranged that the velocities of the arms are not equal, and looped curves are the result.

4769. Brookes, A. G., [*Upton, E. W.*]. April 17.

Thermometers.—Relates to instruments of the Bréguet type, in which the axis of the helical coil A runs parallel to the face of the dial B. The coil is held at one end by the clamp C, which can be adjusted so as to regulate the effective length of the coil and thus make all instruments read alike. Other adjusting-screws D are provided, by which the pointer may be set to correspond exactly with the temperature. The upper end of the coil is fixed to a pivoted arm E adjustably centered on the bridge F. A crown-toothed arc on the other end of this arm gears with a pinion on the spindle of the index finger. Maximum and minimum fingers are also provided which are carried into position by a projection on the index finger, and, to prevent mistakes, these fingers are made less than the main index, and move over concentric graduated circles of a smaller radius.

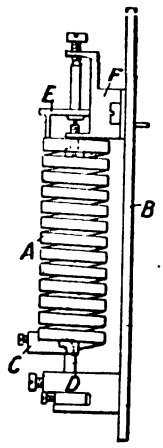

4785. Downing, J. S. April 18.

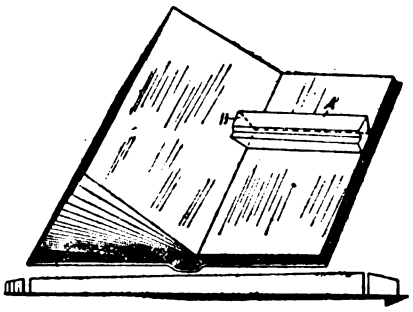

Rulers.—An overhanging edge is provided for inking, which, when reversed, lies upon the paper for pencilling. The ruler may be of various sections. One form, adapted for ruling quite close up to the inner edge of a book, is shown. For this purpose the edge A is under cut and the back stepped, while the end B is chamfered to go against the leaves at the other side. The surfaces to rest upon the paper may be fluted to give a firmer grip.

4815. Lorrain, J. G. April 18.

Thermometers.—Relates to means for determining temperatures at a distance. The essential principle of the invention, which may be to some extent modified according to circumstances, is to carry two strips or wires of different metal, joined at their ends but insulated between, from the transmitting to the receiving station. At the

Digitized by Google

latter a galvanometer is included in the circuit, and a thermometer is placed close to the junction. On observing the deflection of the galvanometer and the temperature of the junction the required temperature may be calculated, but to save trouble a chart with the temperatures for various deflections is placed close by, so that the result can be at once read off.

4858. Tomkins, S. L. April 20.

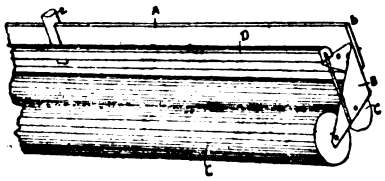

Rulers.—A vertical straight-edge A is connected by end pieces B with two or more rollers C, C; upon the end pieces may be mounted a bar D to act as a finger rest, and also a piece E with rings or clips for holding the pen steady, may be fitted to slide freely along the straight-edge. The finger rest and slider may, however, be dispensed with.

5073. Rickard, P. April 24.

Levels.—Relates to a spirit level and gauge adapted to measure the distance between the rails of railways and their elevation. A graduated racked bar is movable vertically in a socket at one end of the gauge by a pinion and can be clamped in any position. When in use the gauge is placed upon the two rails with the racked bar resting on the lower rail. The racked bar is then moved by the pinion until a spirit level fixed to the apparatus indicates that the cross-bar of the gauge is horizontal, and the difference of height of the rails is read off from the graduations on the racked bar.

5589. Musgrave, S. May 6.

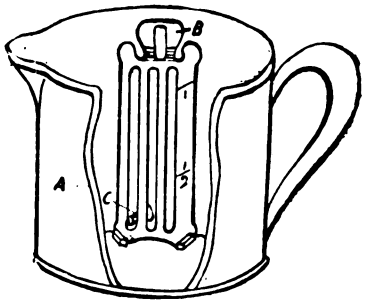

Specific gravity estimating apparatus.—Relates to milk-testing apparatus combined with a measure. A cylindrical measure A is provided with a perforated screen B, graduated for measuring the milk, behind which is a specific-gravity bulb C which sinks in all but good milk. The screen is fixed so as to be readily removable.

5671. Gauntlett, W. H. May 8.

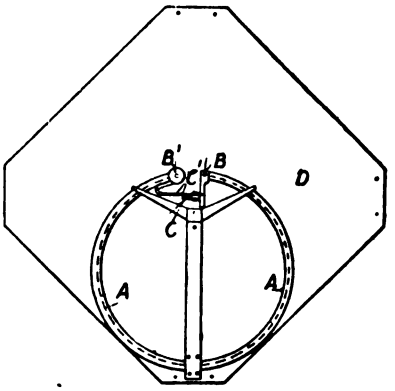

Thermometers.—A bi-metallic band A, in the form of a horse-shoe or a nearly complete circle, is fixed in the middle, the two ends B, B¹ being left free. The end B carries a bracket on which are two parallel racks C, formed by fine screw threads; the end B¹ carries a similar rack C¹ by an elastic bracket. The spindle of the pointer consists of a piece of pinion wire which rests between the two lower racks C and the upper C¹, and thus requires no bearings but passes freely through the dial plate D. Changes of temperature alter the distance between the ends B, B¹, and the consequent movement of the racks revolves the pointer.

5677. Lancaster, W. J. May 8.

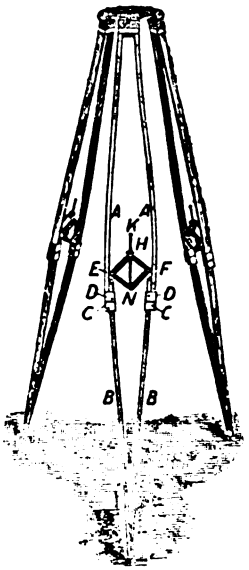

Tripod stands.—The parts A and B slide on each other by the sockets C and D. The tops of B carry, by short links, a couple of flat-bar parallelograms, hinged at E and F on roughened pins between the links, and at N and H to cross-pins. The screwed rod K is fastened to the cross-pin at N, and passes through a plain hole in that at H, above which it bears a milled nut. On screwing down this nut the parallelogram is extended, thereby causing A and B to be tightened together. A rack may be used instead of the screw K.

Digitized by Google

6064. Harris, F. May 18.

Compasses, drawing. — Relates to holders for pencils, needle points, &c. A split tapered barrel A is screwed externally, and has a collar B at its lower end, over which works the internally-screwed ring C for tightening the grip on the pencil &c. When very elastic material is used one longitudinal slit in the barrel is sufficient, but ordinarily two or more are employed. The holder may also be made plain, and the ring then slides instead of screwing.

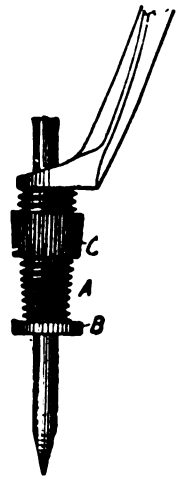

6260. Barnard, G. A. May 22.

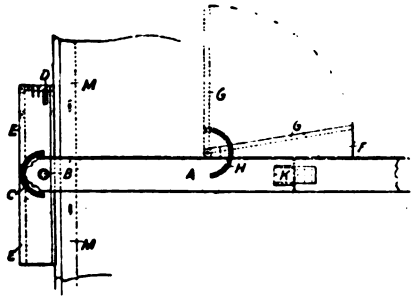

Squares; angle-measuring instruments; rulers; compasses, drawing; levels.—Consists principally in forming the parts of a T and set square so as to adapt them to other uses. The blade A of the T-square, which is pivoted at B to the head, and which ends in a pointer moving over a graduated arc C, may also be clamped at any required angle so as to form a protractor, or it may be removed and fixed at the end D. The T-head has a bar E pivoted to it, which may be opened out and set to any required angle on a graduated plate attached by a screw. When the blade is fixed at D and the bar E so opened out, the combination is used as a centrolinead. F is the set-square, the arm G of which can be adjusted in any required position by a thumb-screw in the slot of the quadrant H. In another form of this set-square two slotted rectangular bars are pivoted together; but, when desired, these may be connected by links so as to form a parallel ruler, or fitted with points at their ends and connected by a pin passing through their slots, for use as proportional compasses. The blade of the T-square is made in two parts fixed together by a joint K of special construction, and the T-head may be fitted with an angle-iron to slide in a groove between the drawing-board clamp M and a metal facing thereon. The T-head may be detached and fitted with a spirit level, and the arm E with sights, for taking elevations.

6399. Allison, H. J., [*Espenschied, C.*] May 26.

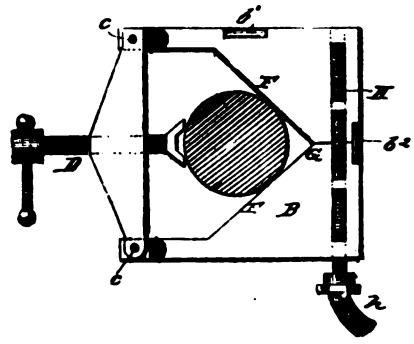

Levels. — Relates to a shaft level and aligner. The instrument consists of a plate B shaped as shown, with the inside edges F, F at right-angles. A clamping-screw D passes through the cross-piece fastened at *c*, *c*, and is tightened down on to the shaft, the parts being carefully constructed so that the axis of the screw should pass through the centre of the section of the shaft, and bisect the angle between the edges F, F. To the plate are fixed two spirit levels b^1, b^2 and a graduated glass tube H open at both ends, which may be connected at one end with flexible tubing *h*. To level a shaft two or more of these instruments are fixed to it, and the tubes H are brought vertical by the spirit levels b^1. The tubes H are then connected to a flexible water vessel, and water is forced into them, which, if the shaft be level, will rise to the same height in all. To align shafts the instruments are set by the levels b^2 so that the tubes H are horizontal. The marks G, exactly bisecting the instruments, are then brought into line by means of a cord. In a modification, the shaft is grasped by a pair of jaws worked by a right and left handed screw.

6688. Allison, H. J., [*Fay, C. P.*]. June 2.

Dividers. — Relates to an improved joint for those callipers and dividers in which the legs are forced together or apart by a spring, and kept in position by a nut on a screw fixed to one leg and passing through the other. The legs *a*, *a* are formed with sockets *b*, *b* which grasp a pin *c* having a head at both ends. At the top of the legs are formed, on the

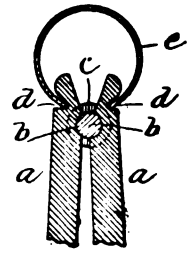

Digitized by Google

outside, notches *d*, *d* into which fits a hoop spring *e*, notched at its ends so as to be kept securely in position. On removing the spring, the parts separate so that the legs can be easily changed.

7147. Müller, W., [*Derckmann, C.*]. June 11.

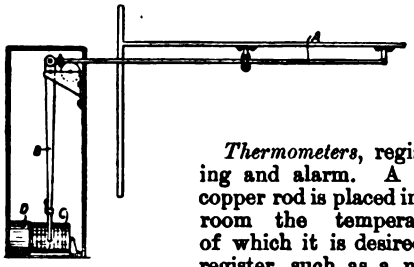

Thermometers, registering and alarm. A long copper rod is placed in the room the temperature of which it is desired to register, such as a malt-drying room; the rod is fixed at one end and supported on rollers. The motion of the free end works mechanism moving a pencil on a drum revolved by clockwork, and thus a continuous record is kept of the changes of temperature. Some part of this mechanism carries a contact-maker which, on touching a certain point, which is set as required, completes the circuit of an electric bell. The Figure shows a simple form of the apparatus, where the copper rod A presses against the short arm of the lever B, the other end of which traces a record on the drum C revolved by the clockwork D.

7153. Gilmore, J., and **Clark, W. R.** June 11.

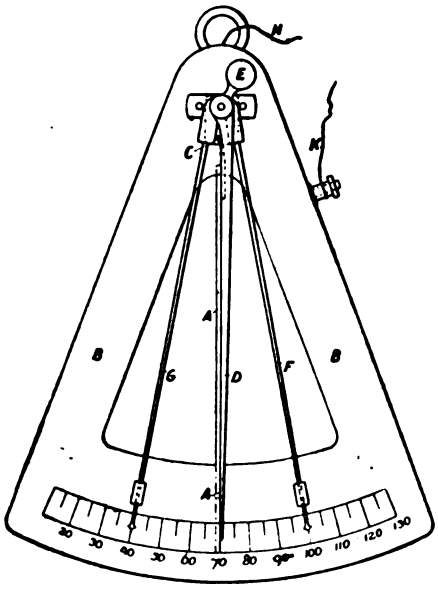

Thermometers.—Relates to alarm thermometers. A band A of two different metals fixed at the back of the graduated sector B carries a pin C projecting through to the front of the case. The index finger D is constantly pressed against this pin by the counterweight E, and is thus caused to show the temperature at any time. Two arms F, G are pivoted upon the same spindle as the index finger; this spindle is insulated from the casing, but connected by the wire H with one terminal of a battery, the other wire K being connected with the casing. The arms are set at the temperatures at which it is desired an alarm should be rung, and when the pin touches either of them the circuit is completed.

7175. Young, J., and **Richardson, J.** June 12.

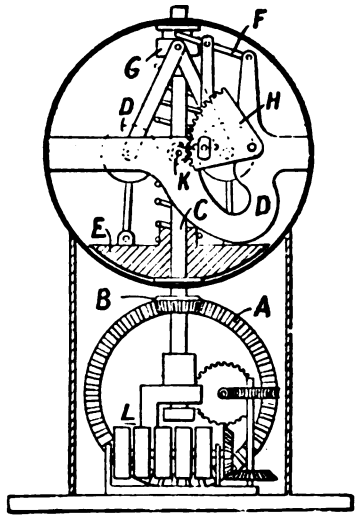

Logs.—The cord of a vaned rotator is connected to a spindle on which is mounted the bevel-wheel A, and also a pinion (not shown). The former gears with the bevel-wheel B and so communicates rotation to the spindle C upon which are mounted a pair of governor balls D linked to a flywheel E rotating in frictional connection with the spindle. A lever F, with a stud on its free end running in a groove in the sleeve G, causes the quadrant H to move with different speeds of the governor balls; H gears with a pinion K on the spindle of which is mounted a pointer showing the speed at any instant. The pinion on the spindle of the bevel-wheel A gives motion to counter discs L, by which the total distance the ship has run is shown. A recording-apparatus, consisting of a pencil tracing on a revolving drum, may be added if desired.

7270. Plumb, R. H. T. June 15.

Compasses, magnetic; course indicators and correctors, non-magnetic.—Relates to a combined compass and course corrector. An annular ring A

Digitized by Google

reversely graduated with the points of the compass, a second ring B marked with degrees, and a variation arc C, are fitted round the compass, or to the binnacle, so that they can be revolved

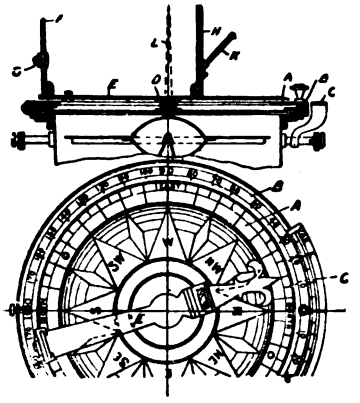

independently and clamped in any required position. A boss C on the glass of the compass supports a cross-bar E on which are hinged a closed sight vane F with sliding coloured sun-shade G and an open sight H with wire and hinged mirror back-shade K. The shadow pin L is used in place of the sights under some circumstances. By this instrument the true and magnetic course may be determined as follows:—The meridian of the ring B is placed to "ship's head," the south point of the reversed card is put to the sun's true bearing, and the cross-bar E turned till the shadow of the wire in the open sight vane falls on the slit in F and the centre line of the cross-bar; the pointer then shows the true course. To obtain the magnetic course the variation arc is used.

7360. Dawes, B. M. June 17.

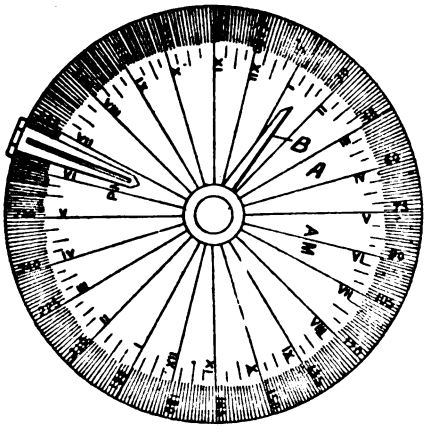

Bearings, instruments for determining by the sun or stars. The disc A is divided into hours and degrees, and carries an adjustable pointer B, for taking bearings, and a slit elevator as shown. The slit is first set to the time of observation and then, the disc being held horizontal, is brought into alignment with the sun. It is stated that the "noon" line will now point north and south.

7412. Steward, J. H., and Dredge, W. June 18.

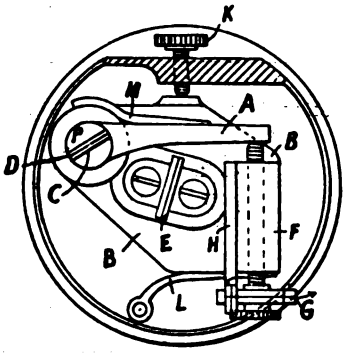

Angle-measuring instruments; range-finders. — Relates to instruments of the sextant class, both mirrors D, E being mounted on movable arms A, B pivoted on the same axis C. The lower limb B carries a boss F through which works a micrometer screw to adjust the arm A, the graduated drum G upon the screw working in connection with the bar index H on the boss. The screw K is used for adjusting the lower limb B. Springs L, M press the limbs against their respective screws. By the use of this instrument the two objects observed need not subtend an exact right-angle at the observer. A reading is obtained, by two observations of the object of which the distance is required, from opposite ends of a base line of known length; the distance can then be read off from tables used with the instrument.

7480. Manger, J. June 19.

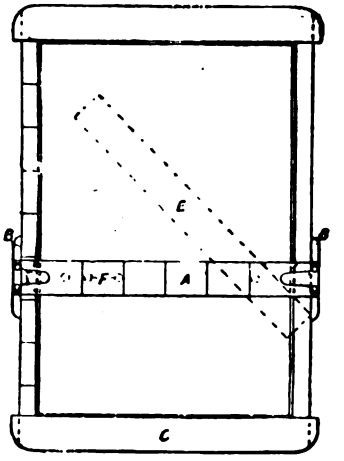

Rulers. — School slates are provided with a sliding ruler A guided by the pieces B, a second

Digitized by Google

ruler being attached on the other side. The rulers have a scale marked on them, as also may one of the side rails. Holes F are made in which a pencil may be inserted and vertical lines obtained by sliding the ruler. For ruling inclined lines a bar E may be pivoted to A. At the top and bottom of the slate projecting pieces C are attached to prevent the ruler from sliding off the frame.

7575. Ackerley, J., and Parr, B. June 22.

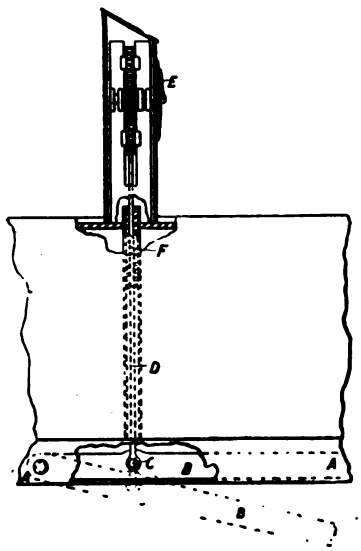

Sounding-apparatus.—Within a recess in, or upon the side of, the keel A of a vessel is pivoted a rod B which can be let down or drawn up by a chain at its other end. To B is pivoted at C a second rod D which passes up through the vessel and is connected by a rack and pinion with an index finger E. The spring F helps to keep the rod B down against the pressure of the water. When the vessel is in shallow water, B strikes the bottom, and is forced nearer to the keel as the depth diminishes, while the changes of position, and so of the depth, are shown on the dial.

7659. Job, H. June 24.

Compasses, magnetic.—Relates to mariners' compasses. A set of observations of the sun are made in the morning and afternoon, by the average of which true north is determined. The needle is then fixed on the card so that the north point on the card points to the true instead of the magnetic north. It is claimed that once set in this way, the card will always be free of deviation.

7890. Wilding, S. P., [*Schoening, H.*]. June 29.

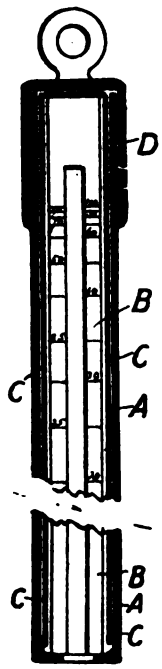

Sounding-apparatus.—Within a tube A, open at the bottom, is placed a graduated rod B, held in position by a long cap C, the different parts being secured when fitted together by the cap D fastening with a bayonet-joint. A strip of paper marked with an aniline pencil is clasped against the rod by a piece pivoted thereto. After a sounding, the discolouration of the aniline shows the distance the water has penerated the tube, and the depth of the sounding is then read off on the graduated rod.

7996. Raworth, J. S. July 1.

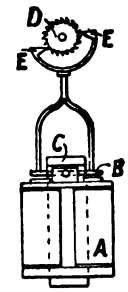

Logs; current meters.—Relates to electrical apparatus for indicating the distances travelled by ships, applicable also for indicating the speed of flowing fluids. The principal object is to avoid the use of batteries and moving contacts, and for this purpose the indicator of the apparatus is worked by alternating currents caused by the revolution of a permanent magnet round a fixed coil. This mechanism is connected to the vaned rotator by the tow-rope, or it may be part of the rotator, and the conducting-wires pass along the tow-rope. The alternating currents excite an electromagnet A with a pivoted armature B polarized by the permanent magnet C; an oscillation of the armature is thus set up which rotates the escape-wheel D by means of the pallets E, and so communicates motion to the indicator. The instrument is used as a current meter in the following manner:—A separate indicator is provided worked in a similar manner, but combined with clockwork which throws it into or out of gear every half minute. The index finger of the indicator is advanced by an arm on the main spindle, which is returned to zero by a spring whenever the indicator is thrown out of gear, and leaves the finger stationary. A light spiral spring tends to return the finger also to

Digitized by Google

zero, but this is prevented by another spring which presses a little cone on the finger against a conical bearing. Every minute, however, the clockwork withdraws this pressure spring for a short period and allows the finger to swing back against the before-mentioned arm. Every minute the position of the index finger is thus corrected, so that while stationary it shows the number of revolutions per half minute, and thus very approximately the speed at any instant.

8043. Mallock, H. R. A. July 2.

Telemeters. — At each end of a rod A of known length are fixed a pair of mirrors B, B^1, C, C^1, the first pair at an angle of 45°, while one of the second pair is adjustable by a screw D which works an index finger of a dial graduated for distances. The direct view and the reflected image of the object of which the distance is to be determined are made to coincide by moving the mirror C^1, and the distance is then read off from the dial. A telescope E may be fitted to the rod and turned back when not required; F is a stock by which the instrument is held in the hand.

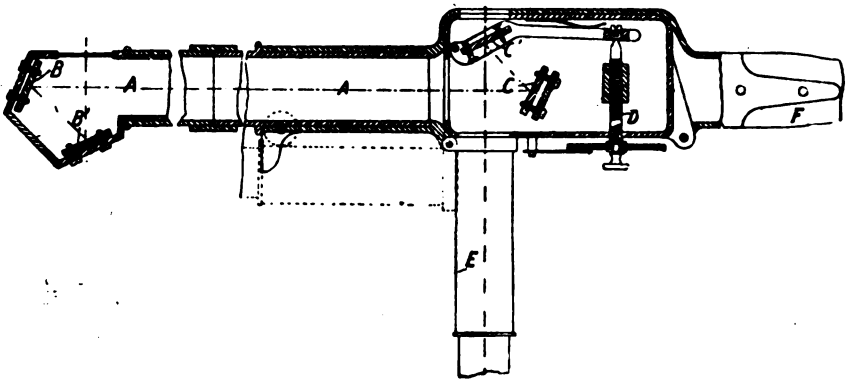

8222. Šafařik, V. July 7.

Specula for telescopes &c. are cast in special hard bronze alloys of various types, and then turned on the lathe. The surface is next polished by emery wheels, and finally coated electrically by a film of silver, platinum, or the like.

8335. Abel, C. D., [*Vaquez-Fessart, E.*]. July 9.

Colours, testing.—A fabric for use in testing colours of threads for textile fabrics is woven with two sets of warps A, A, A and B, B, B, the first of white or coloured cotton, and the second of silk or wool of different shades: the warps are held together at intervals by wefts C, C. This fabric is then cut into strips and a card D inserted alternately over and under the warps. The construction may be somewhat varied if desired.

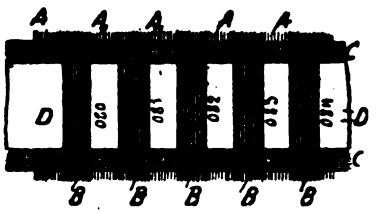

8342. Whitten, J. S., and **Plant, H. G.** July 10.

Spectacles, safety attachment for. The invention is designed to prevent the loss, while in use, of spectacles, and like articles. It consists of a disc *c* of india-rubber, wood, cork, cardboard, or any similar substance enclosed in a globular case or shell *a* having a hole *d* on each side through which and the disc *c* the wire, pin, &c. *b* of the article to be secured is passed. In applying the attachment to spectacles the shell *a* is preferably mounted upon a wire so that when it is forced on to the ends of the side pieces the said wire passes behind the wearer's ear and secures the spectacles in position.

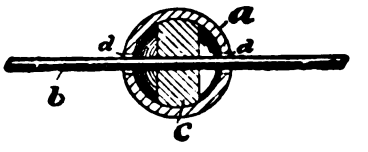

Digitized by Google

8461. Cooper, A. J., and **Wigzell, E. E.** July 13.

Sounding - apparatus.—Water is admitted to the part of the instrument A, containing a Bourdon gauge, by a valve in the side which is closed, by an india-rubber ring being pressed over the inlet perforations, directly the sounder begins to ascend again; the greatest pressure thus remains registered until a vent plug is unscrewed and the water drained off. Below the part containing the gauge is hung the sinker B with the claws C forming sectors of a hollow sphere and adapted to take up samples of the bottom. The triggers D, D are fitted into the groove E on the sleeve F, so as to keep the claws open until the rope slackens by the sounder striking the bottom. The sleeve then slips down the spindle G and the claws close by an india-rubber ring H or a spring. Where the bottom is very hard, toggles and springs are used for this purpose.

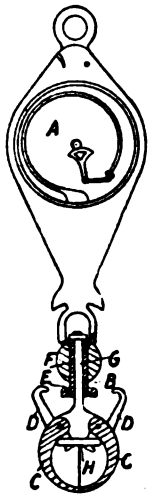

8551. Carter, W. July 15.

Ruling - pens.—Relates to an attachment to drawing-pens for ruling music and other lines, the invention being shown as applied to an ordinary pen. To the tube A, fitting over the pen, is hinged a leg B, which can be turned back for dipping. The screw C adjusts the leg at the required distance from the penholder. The appliance may be used either for ruling a series of parallel lines for music &c., as indicated in the Figure, or the leg may be pressed against the ruler to prevent it from getting smeared with ink.

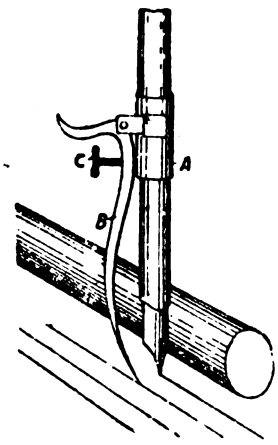

8624. Hooker, J. July 16.

Sounding-apparatus for rivers, wells, &c. The apparatus is designed principally for the use of anglers. It consists of a float with central bore through which a line passes having a plummet at the end. The float is provided with an automatic clip which allows the plummet to descend freely but nips the line on drawing back. One form is shown in the Figure. The float is slotted from the bore to allow it to be readily fitted on the line, which is prevented from slipping out by eyes A, A. The clip is attached to a metal piece B on the float, and consists simply of a lever C with a weight at one end, the other end abutting on a stop D. In another form two other floats are fixed at the ends of levers pivoted on the float, the short arms of which actuate the clip.

8653. Swan, C. F. July 17.

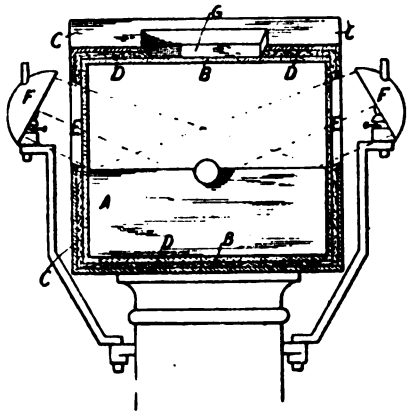

Binnacles.—The compass is mounted in the ordinary box A and surrounded by a glass case B which is further surrounded by a rubber shield C. Between the glass and shield is placed non-conducting material D, such as charcoal, for destroying local attraction. Requisite spaces E, E are left in the shield and charcoal to admit the light of the lamps F, F, and a similar space G to permit of observation.

8748. Reddie, A. W. L., [*Sergeant, H. C.*]. July 20. *Drawings to Specification.*

Tripod stands for rock drills. The stands have hip-pieces at opposite sides between which extends

Digitized by Google

a socket carrying the cylinder &c., and which have trunnion bearings for the said socket. The back leg is pivoted between the hip-pieces at their rear ends, while the front legs are pivoted to the front ends of the hip-pieces.

8807. Boult, A. J., [*Stuart, C. W.*]. July 21.

Compasses, drawing.—The pencil is carried by a graduated sleeve A into which it may be reversed for protection when not in use. On this sleeve is a bracket B to which the leg of the compass is hinged, so that it can be clamped at any angle by a nut. The leg has a socket for the needle C, which can be pushed right back or fixed in any position desired by the screw D. The back of the leg is slit to allow a knife blade F, pivoted on the same axis as the leg itself, to be folded up.

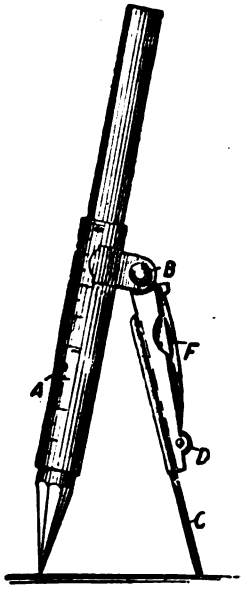

8870. Fournet, A. M. A., and **Wood, W. C.** July 22.

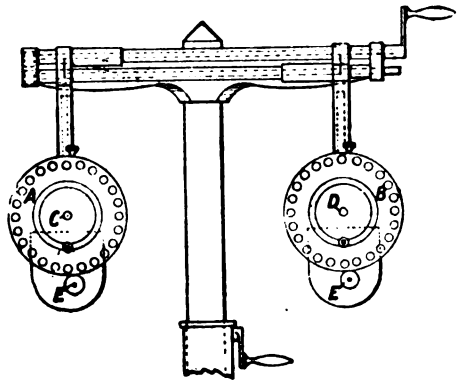

Sight-testing apparatus.—The apparatus consists of two sets of double plates A, B revolving on spindles C, D independently. A series of circular apertures are made around the circumferences of the plates; in one plate is fitted a graduated series of convex lenses, and in the other on the same spindle convexo-cylindrical lenses. The second pair of plates are fitted with concave and concavo-cylindrical lenses. The plates carrying the convex or concave lenses can be rotated by means of gearing E by a handle, and each lens brought alternately before one of two apertures in a guard plate not shown. The plates with the cylindrical lenses can be turned by hand, but gearing is arranged which simultaneously rotates all the lenses until the direction of astigmatism is found; this is then read off on an index in connnection with the gearing. In each plate an aperture is left vacant so that one only of the plates may be used. The Figure shows a convenient form of adjusting stand, but any other may be used.

8873. Kellett, J. July 22.

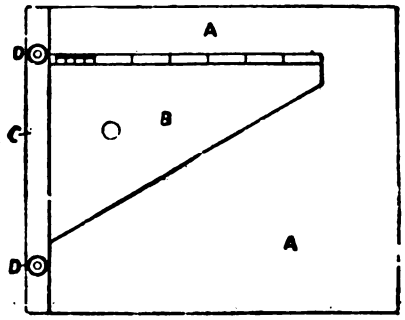

Squares.—Relates to an improved drawing-board, and to set-squares for use therewith. The drawing-board consists of a rectangular sheet of stout cardboard A with a strip of wood C permanently affixed or secured by thumb-screws D. The set-square B is trapezoidal in form, and it is preferably graduated along its upper edge.

8953. Curry, W., and **Pickard, J. F.** July 24.

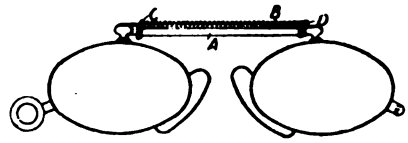

Eyeglasses.—The bridge is constructed in two pieces A and B, each having a metal piece C, D at one end and being attached to the glass frame at the other. The pieces C, D are pierced so as to allow B and A respectively to slide through them, and a spring is coiled round B which tends to draw the glasses together when being worn.

9028. Binter, G. July 27.

Thermometers and barometers, recording-apparatus in connection with. A ribbon of paper A is drawn

Digitized by Google

forwards by the roller B and spring roller C, the former being revolved steadily by clockwork D. A rocking bracket E is provided with a cylinder with printing or pricking devices arranged in a

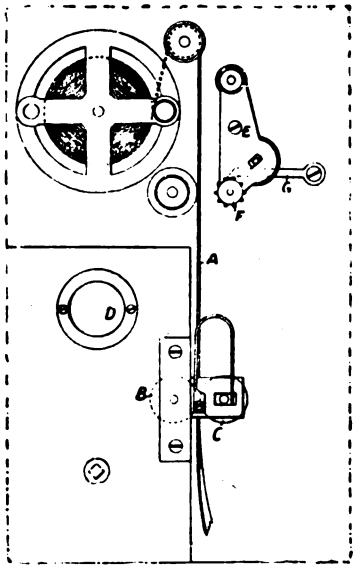

spiral thereon; the end of the cylinder is fitted with a ratchet-wheel F with the same number of teeth as there are marking-pins into which gears the pawl G. Each time the bracket is moved forward to mark the ribbon, the pawl engages with a fresh tooth and advances the cylinder on the return movement. The printing may be performed by hand, or the bracket may be moved by an electric current exciting an electromagnet to the armature of which it is attached. For instance, in registering temperature, a series of thermometers have their bulbs connected to one wire of the magnet, the other wire being attached to an arm moved by clockwork over a corresponding number of contact-pieces; these are in connection with platinum wires passing down into the thermometers to 5°, 10°, &c., respectively, circuit being completed by the rising of the mercury. Obvious modifications may be used for registering the height of the barometer &c.

9115. Haddow, A. July 29.

Thermometers.—The thermometer tube A is attached to a piece B capable of sliding in a slot C in the scale D and fixed in any position by a binding-screw E. The attachment is effected by a coiled wire F, an india-rubber pad G being inserted between the tube and scale. Any error in the reading of the instrument may thus be readily corrected.

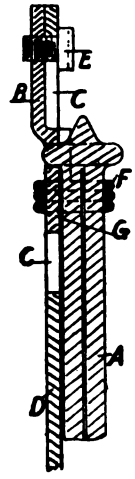

9202. Johnson, G. L. July 31.

Spectacles.—The joint of the lens frames is formed by turning the metal out at right-angles, the upper part being longer than the lower, which is let into it, and so shaped as to form one continuous bar A; the two parts are then fixed together by a screw B. The end of the bar A is cut down, so as to form a spindle on which is an ordinary swivel joint C for the arms, and it is also tapped for the screw D; a friction joint is thus produced, making it possible to set the glasses at various angles to the arms. A stop E is formed just above the swivel collar to come in contact with a flattened part of the bar A and prevent the arms from revolving round their shaft.

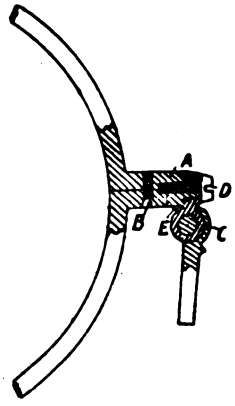

9672. Nordenfelt, T. Aug. 13.

Range-finders.—Within the draw tube of a telescope, preferably a binocular, is mounted a divided lens A, one half of which is fixed and the other attached to a movable slide B worked by a projection upon it engaging with a snail groove on a disc. The disc is rotated by means of a worm on the spindle C with milled head D. The two parts of the lens are kept in contact during the movement, and a double image is obtained of the distant object by which its distance is known in different ways. For example, the water-line of a ship in one image may be made to coincide with the horizon line in the other. The periphery of the disc is flanged, and the flange is graduated according to the use of the instrument, so that the distances may be at once read off. Where a binocular is used similar mechanism is fitted in both draw-tubes and

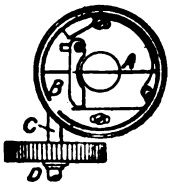

Digitized by Google

worked simultaneously. Instead of the divided lens an equivalent arrangement of mirrors and prisms may be used.

9699. Bogle, J. Aug. 14. *Drawings to Specification.*

Latitude instruments.—A hemispherical brass bowl is pivoted on an axis, and within the bowl is gimballed a hemisphere of glass with a thin brass lid at the centre of which is a small hole. The interior of the glass bowl is washed with silver nitrate or covered with sensitized paper, so that a line is traced by the action of the sun's rays passing through the hole. In reading, the brass bowl is turned upon its pivot so as to expose the glass, and a graduated semicircle fitted to slide round the glass bowl is employed. By comparison with the declination the latitude may be found at once. The sensitized paper keeps a permanent record of the sun's path.

9772. Brown, E. H. Aug. 18.

Shading-machines for drawings.—Relates to apparatus for tinting and shading drawings, by placing the drawing in contact with a plate having raised and inked lines. The Figure shows a plan of the machine and sections upon the lines *x x* and *y y*. The parts are arranged upon a bed-plate A with feet *a*, which is provided with a central hollow boss $a^{\times}$ to receive a central pivot $b^{\times}$ upon a circular plate B. The plate B is also provided with feet *b* at its periphery which rest upon the bed-plate, and with radial slots for receiving ribs or downward projections of corresponding width C^3 from a circular plate C, by which means the latter may be made to slide upon the plate B. This sliding movement is brought about in one direction by a screw D which passes through a downward projection upon the plate C, and is screwed into one of the feet *b*; a spring *d* serves to move it in the opposite direction when the screw is turned outwardly. Surrounding the plate C is a ring or skeleton plate E with brackets *f* for receiving the adjustable screw feet *e*, which rest in cavities in the bed-plate A, which they fit. The picture is stretched in a frame P, and is clamped face downwards upon a ring G so as not to touch the plate K (the inner circle of which corresponds with that of the plate E) by means of bars H and screws J, the screws passing through the ring G to tapped holes in the plate E. The picture is shaded by pressing it upon a lined or grooved and inked plate K which is fixed upon the plate C by clamps *l* which clip its edges in a dovetail manner. The plate as above mounted may be rotated or moved laterally as desired. The rod Q carries a pencil R, and is adjustably held by a set-screw *s*, in a pivot resting in holes *t* in the ring G. This device serves to adjust the relative positions of the picture and tinting-plate.

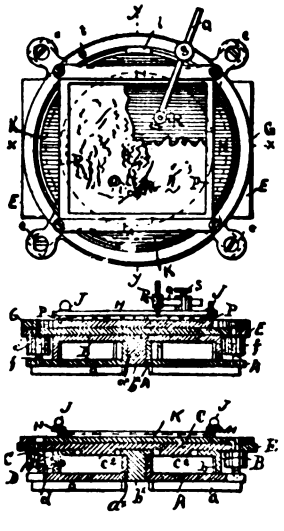

9849. Paget, F. A. Aug. 19.

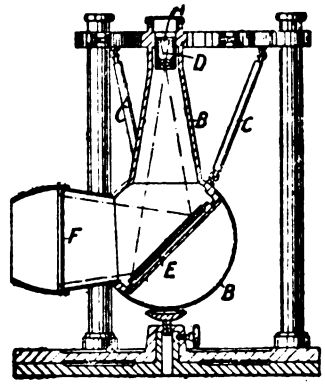

Compasses, magnetic.—A very minute card is used, formed preferably of mica upon which the points are produced by photography, and directed by one or more needles of about $\frac{1}{15}$ of an inch in length. An optical apparatus, such as a low-power microscope, is then employed to render the image of the card distinct. Such a compass is scarcely affected by local disturbing influences, such as the iron of the ship, and can be used as a reference compass, or, in one of its modified forms, for taking azimuths. The Figure shows a form adapted for being viewed at a distance. The minute card A is mounted in the case B, swung in gimbals and steadied by springs C. The image of the card is magnified by a combination of lenses in the tube D and directed by the mirror E of special construction upon the translucent screen F, shaded so as to avoid light falling upon it from its front. The cap which holds the card may be composed of an alloy of magnesium and aluminium, and the magnets inserted in saw cuts; the card itself may be formed of hard vulcanized cork dust, india-rubber, and sulphur.

9857. Lake, H. H., [*Walcher-Uysdal, R. Ritter von*]. Aug. 19.

Barometers, signalling-apparatus for use with, chiefly applicable for mines. The apparatus is devised to signal a fall of the barometer, which

Digitized by Google

is generally followed by an outburst of fire-damp in proportion to the fall. An ordinary or aneroid barometer *a* actuates a pointer *b*, which carries a small metallic wheel *c*, which runs

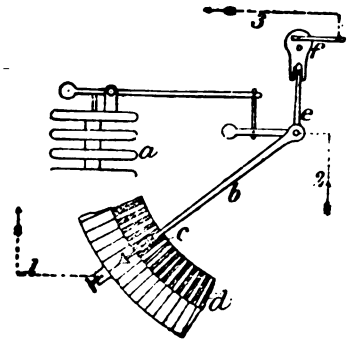

on a plate made up of alternate plates of insulating and conducting material *d*, each part being of such size that contact is made for each millimetre fall in the barometer. The contact thus made through 1, 2 causes the current to pass through an electromagnet which actuates a pawl and ratchet-wheel connected to the snail-wheel of a repeating clock, which strikes a bell once for every millimetre fall every minute. If, however, the barometer rises the lever *e*, which works in the fork *f*, one side of which is insulated, makes contact with the pivoted fork *f*, and so closes the circuit 2, 3. This actuates another electromagnet automatically breaking the circuit 1, 2 till a fall occurs, and also brings the snail back to its first step. Various other mechanisms can be actuated by the electromagnets, all of which can be used to sound the bell &c. as before, but in any case the clockwork mechanism is so arranged that it brings the striking parts back to the normal position after a definite interval, say eight hours.

9969. Dillon, J. Aug. 22.

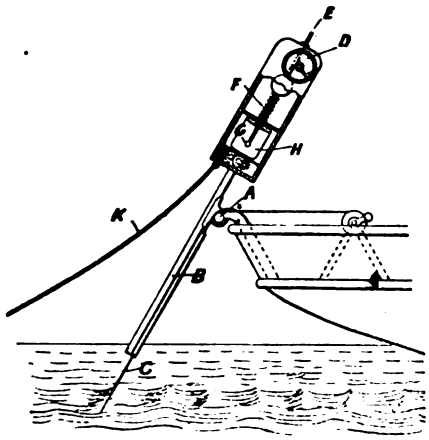

Sounding-apparatus.—A convenient type of the apparatus is shown, although the details may be very much modified. Upon a suitable part of the ship, or upon a submarine or other boat running in advance of it, is pivoted at A a rod B, which may either be continued so as to drag along the bottom at convenient depths, or a wire C may be used for this purpose weighted at its lower end. The inclination of the rod and consequent depth of the water is indicated on the dial D, the motion being given by the sliding rod and weight E working against a spring F. A pencil G traces a record on the moving section paper H, which is advanced by clockwork actuated by the revolutions of the log line K, or other suitable means dependent upon the movement of the ship: other signals may be arranged in various parts of the vessel worked from the same source, and electric alarms are fitted to give warning in case of dangerous shallows being approached. In another form a pressure gauge, the dial of which is connected electrically with a dial on board, is trailed along the bottom.

10,366. Daniel, J. Sept. 1.

FIG. 1.

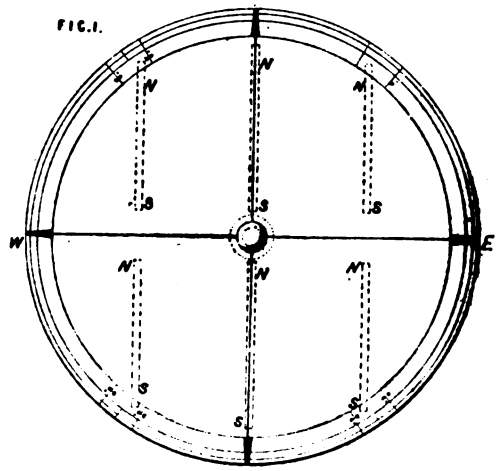

Compasses, magnetic.—Several pairs of needles N S, generally three, are arranged symmetrically with regard to the E and W line of the card, by which means greater steadiness is obtained. The card is mounted in the usual manner, and the needles of each pair are placed in a line with one another.

10,415. Cox, J. Sept. 3.

Spectacles, cleaners for. A packet of equal-sized sheets of paper is folded in the middle, and the bevelled or wedge-shaped edges so produced are attached by gum to a folded cover of leather. The spectacles may be moved to and fro within this pad for cleaning, and soiled sheets can readily be removed. The construction may be somewhat modified.

Digitized by Google

10,526. Pillischer, J. Sept. 5.

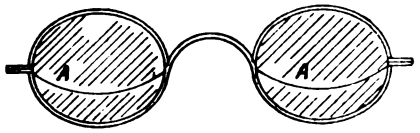

Spectacles.—Relates to spectacles with divided lenses, the two parts being of different powers. The join A is curved so as not to interfere with the line of vision, and the edges are blackened, or a strip of ebonite or opaque substance is inserted between the segments and fixed to the the rims.

10,690. Heale, M. Sept. 9.

Reflectors for ornamental or other purposes. Thin sheets of mica are silvered and set in a frame which holds them in the requisite form, curvature, and position.

10,733. Mallett, J. R. M. Sept. 10.

Rulers.—The body A of the ruler is flat, with the front edge B bevelled and a ledge C at the back for the fingers and thumb to grasp. A recess D is generally provided below for a small roller, so that parallel lines can be ruled but the ruler will not readily run off a desk or table. A recess may be cut in the upper flat face in which pencils or penholders may rest.

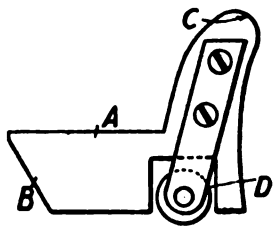

10,805. Murrie, J. Sept. 12.

Thermometers.—Relates to improvements on the apparatus for measuring temperature or pressure described in Specifications Nos. 9393 and 15,947, A.D. 1884, and No. 303, A.D. 1885. A vacuum is produced in the U tubes of the mercury gauges by providing in the shorter leg a cock through which the excess of mercury is allowed to escape when the tube, after being filled in an inclined position, is raised to a vertical position. In one form of gauge a straight tube is used, its upper portion being coiled and provided with a cock for exhaustion. In another form, a straight tube, open at its lower end, dips into an expansion chamber containing the mercury &c. The Figure shows a modification in which a U tube is used. A is an expansion chamber which is subjected to heat and connected by the tube B to a pressure gauge C. Within the instrument a complete or partial vacuum is produced by exhaustion through a pet cock or in other ways. The liquid volatilizes in the vacuum, and as the pressure increases with the heat it is indicated by the gauge C, while the mercury is prevented from boiling. A diaphragm D may be fitted by which an alarm E is rung at a certain temperature; or a safety-valve of ordinary type may be employed. For high temperatures the expansion chamber is coated with asbestos and a chronometer is used to indicate the time the coating takes to heat; a temperature scale is attached graduated empirically. The apparatus may also be used to indicate pressures not generated by heat, such as the pressure in a water main; it is then connected by a branch pipe with the vessel in which the pressure exists.

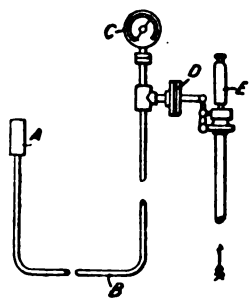

10,920. Colton, E. G., [*Wagner, A.*]. Sept. 15.

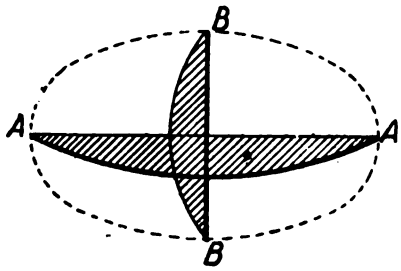

Lenses; spectacles.—Relates to lenses for spectacles and other optical instruments, and consists in grinding the surface so that the radius of curvature of the section along the longer axis A A is greater than that of the section along the shorter axis B B.

11,151. Rhodes, C. Sept. 19.

Compasses, drawing; dividers.—A pencil, pen, or pointed rod is held between two coils of spring wire, one end of which is bent out at right-angles and sharpened to form the other leg. The pencil can easily be adjusted as required, and the spring coils then grip it firmly enough for circles to be described.

11,207. Franck-Valery, P., and **Franck-Valery, E.** Sept. 21.

Eyeglasses.—In addition to the ordinary gripping-devices A a pair of arms B are pivoted to the frame. When in use these can be bent inwards by the little levers C, C, so as to grip the nose and ensure

Digitized by Google

the glasses not being shaken off. When the glasses are to be folded, the arms B are turned back

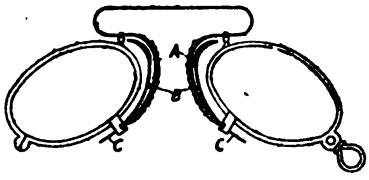

between the devices A and the frame, and then offer no hindrance to the usual operation.

11,211. Walz, A. Sept. 21.

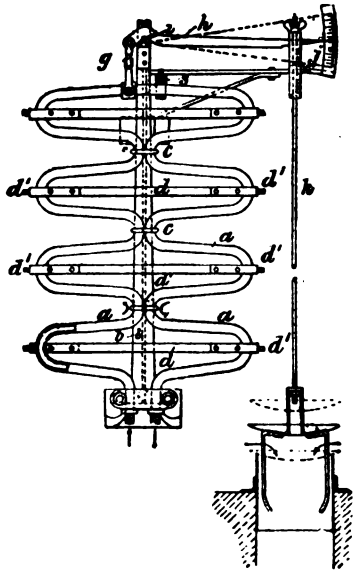

Thermometers. — The thermostatic apparatus described below is fitted with an index so that it acts as a thermometer. The steam, water, &c., is passed through a bent tube *a*, capable of expanding in a vertical direction only, the ends being firmly secured to the lower part of the frame *b*, the inner bends connected by clamps *c*, and the outer bends secured by transverse stays *d*, with set-screws d^1 for adjustment. The uppermost bend of the pipe is connected by means of a link *g* to a lever *h* pivoted at *i*, carrying an index finger *j*, and connected to a rod *k* attached to a valve, damper, or other regulator. When used as an ordinary thermostat, the coil and the frame are made of different metals, and the frame may, in any case, be covered with some bad conductor of heat. The apparatus may, by means of levers or of an electric circuit, be made to operate signals at a distance.

11,213. Mitchell, A. Sept. 21.

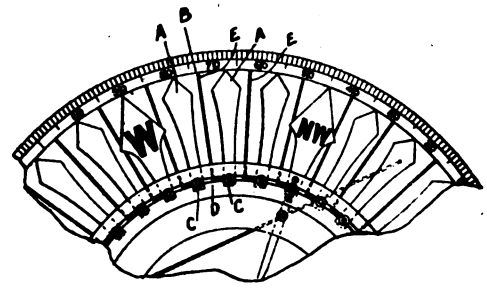

Compasses, magnetic.—The "points" A are independent of, and made movable on, the card B so as to adjust for deviation and prevent errors in reading. They are preferably formed of thin sheets of metal, and attached to the card as desired by screws C and a slotted ring D. The half points may be marked by bent wires E.

11,336. Schlotfeldt, H. W. Sept. 23.

Logs.—Relates to apparatus which may be used as a speed indicator, a log, a pressure gauge, or a governor. The instrument, of which a convenient form is shown, consists essentially of an arrangement of two vessels containing two liquid columns the relative height of which is varied by a centrifugal pump; the motion of a float indicates the speed of rotation of the pump and consequently of the machinery connected therewith. A is the rotating shaft fixed to a vessel B carrying blades C and filled with water; within is the vessel D, also filled or partly filled with water which is caused to circulate by the blades C, passing down the pipe E and back to D through the apertures F, F. The piston float G is thus moved, and by the rod H, slotted bar K, quadrant L, and pinion M works the index finger N. This arrangement is such as to cause the movements of the index finger to be proportionate to the increase of speed, and the parts of the indicator have the requisite adjustments. A second float O may be fixed to the rod H and dip in mercury P. For use as a log, two pipes, one at right-angles to the flow of the water and the other inclined at about 41½ degrees to it, are led to the two vessels.

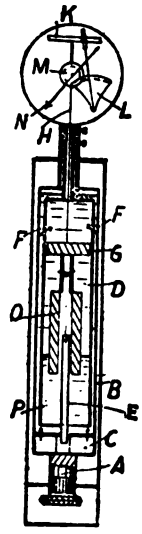

Digitized by Google

11,415. Grant, J. G. Sept. 25.

Range-finders.—Relates to sights for ordnance on elevated coast batteries, constructed so as to show the range for which the gun is pointed. The gun being at a known height above the level of the sea, the distance of any object may be found by observing the angle of depression. A is the back sight, which is fixed to the gun, and B is a sliding rod which passes through a hole in the trunnion and rests on the curved surface C. The curved surface along which the lower end of the rod B slides as the gun is elevated or depressed is so arranged that as the distances increases the sight is lowered, thus causing the axis of the gun to lie at a greater elevation to the line of sight. By graduating the edge of the surface C the distance of the object may be inferred from the position of the pointer B upon it.

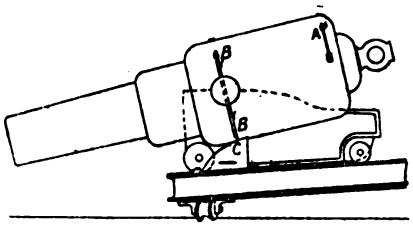

11,898. Thompson, W. P., [*Clarke, C. L.*]. Oct. 6.

Barometers; thermometers.—Relates to means for indicating at a distance the motion of instruments, such as barometers and thermometers. The principal features are (1) preventing injury to delicate contact-points by employing a weak current to complete a shunt circuit along which the stronger working current flows; (2) arranging the current-interrupting mechanism in a separate circuit, which is only completed after the requisite operations have been performed; (3) providing means for indicating failure of the instrument from any cause. The change of temperature, pressure, &c. causes the arm C to make contact with the point on one of the arms C^1, C^2 (say the former), which are rigidly fixed to the ratchet-wheel E. The circuit 1, 2, 9, 3, L, &c., in which is the resistance R, is completed, and a slight current passes, sufficient to magnetize the coil H. This, by attracting its armature, breaks contact at *y* and closes it at *h*, causing a powerful current to flow along the shunt circuit 1, 4, 7, 3, L, &c. By the employment of this shunt injurious discharges are prevented at the delicate contact-point on C^1 when the strong current is broken. The coil F now becomes magnetized and, attracting its armature, causes the pawl *k* to move forward the ratchet-wheel. At the same instant the coil M is also magnetized, and a corresponding advance of the ratchet-wheel in the recording-instrument takes place. At the end of the stroke contact is made for the line L^1 by points on the bent arms of the armatures, and the coil Q is magnetized, causing its armature to strike against the lever S and break the main circuit. A similar process takes place when C makes contact with C^2, the ratchet-wheels being then pushed in the opposite direction. The arm P on the recording-instrument, if thrown too far to one side or the other, completes the alarm circuit V through one of the points *p*, *p* on arms which may be set by hand as required. In case the main battery O should become too weak to perform its functions, the circuit is liable to remain closed. The electromagnet in the arrangement W then slowly draws forward its armature, controlled by a dash-pot, and sets free a signal indicating that the apparatus is not working.

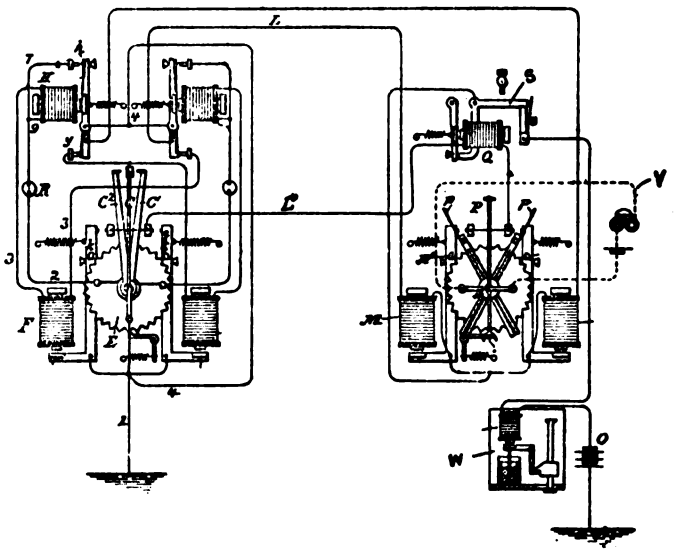

Digitized by Google

11,959. Dollond, A. W. Oct. 8.

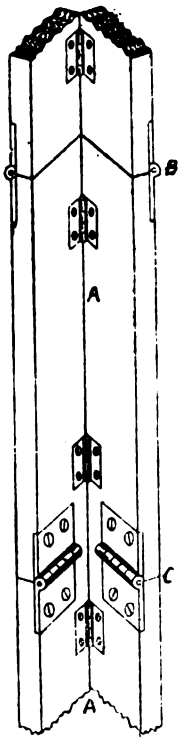

Tripod stands.—The legs of the tripod stand are divided by a medial line A, A along their length, and also into lengths by transverse divisions B, C. Each of these parts is connected by hinges in such a way that when the legs are flat they may be folded at the cross hinges. When, however, the legs are extended they may be folded lengthwise so as to assume an angular form, and the cross hinges becoming by this means fixed the legs are rigid. The legs are connected to a triangular top; they are clamped in the proper position by a hooked bar hinged to one side. Pointed pieces of metal are fitted to the lower ends of the bars.

11,968. Pocock, S. J. Oct. 8.

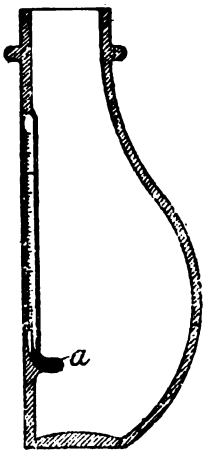

Thermometers combined with feeding-bottles &c. A thermometer *a* is attached to a feeding-bottle, drinking-vessel, or the like in any suitable manner so that its bulb is in contact with the liquid. It may be marked in any required fashion to indicate when the food has the requisite temperature

11,985. Fric, J., and **Fric, J.** Oct. 8.

Lenses; reflectors.—Relates to apparatus for grinding and polishing curved surfaces in metal or glass, and especially for making lenses and reflectors. The lens or other object to be operated upon is mounted upon a revolving table A and the cutting or grinding tool B is carried by a spindle C, the axis of which cuts that of the table either above or below the latter, according as a

FIG. 1. FIG. 2.

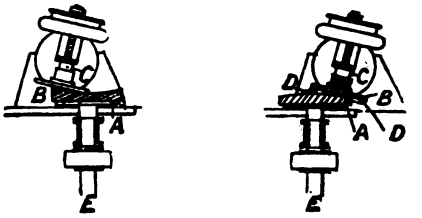

concave or convex surface is to be produced. The tool is preferably made in the form of a disc, and may have a metal ring D fixed to it as in Fig. 2. Its spindle is arranged to be set at any required angle, and may for that purpose be carried by a frame provided with toothed segments operated by pinions. This frame with its driving-gear is provided with a horizontal adjustment by means of racks and pinions or otherwise, while the table A has a vertical adjustment, its shaft E being raised or lowered by screws. The table may be made to travel also horizontally if desired, the driving-belt being suitably arranged to admit of such motion. To produce surfaces other than spherical suitable movements are given to the spindle C or the shaft E by known mechanical devices.

11,990. Golding, W. Oct. 9.

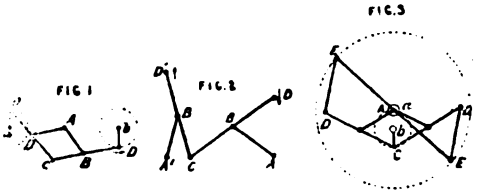

Mathematical drawing-instruments.—Relates to a system of crank &c. linkages, three forms of which are shown in the Figure, and which may be applied as ellipsographs, pantographs, or the like. Two links A B, C D pinned together at B are termed a "claviger," and by modifications and additions, and combinations of two or more clavigers, mechanism of many descriptions for the transmission and conversion of motion are constructed. In the case of ellipsographs the arrangement shown in Fig. 1 may be used; the stud A or the left-hand stud D is then fixed in a slot and the pencil is attached at the right-hand point D. Similar arrangements are adapted for drawing epicycloids and hypocycloids, or as pantograph linkages for reproducing designs &c. to any desired scale. The two points D, D may be fixed each to one leg of a pair of compasses or dividers; a pencil through A C will then mark the centre of a given line. A double claviger linkage may be used to trisect any angle.

Digitized by Google

12,181. Faymonville, B. Oct. 13.

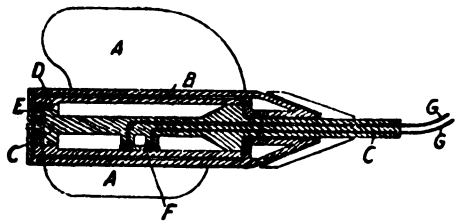

Logs.—Relates to electric counting-apparatus specially applicable to ships' logs. The blades A are fixed to an external cylinder B which revolves round the fixed axis C. An internal cylinder D is connected with the outer by gearing E so that it turns more slowly than the other, and it carries a metal plate F which at each revolution completes the circuit of the wires G, G. An armature is thus caused to oscillate, and a pawl thereon advances a ratchet-wheel connected with the registering-counter. This counter consists of a series of decagonal drums placed loose upon a spindle, each having ten internal teeth on a projecting rim. The first of these is moved by a toothed wheel, which gears with another wheel with teeth upon part of its circumference only. The face of the drum is thus changed rapidly at the proper time, and then remains still until the next change is necessary. Motion is communicated to the second drum by a spring-controlled rod on the first drum the end of which rests on a cam on the spindle. During every tenth of a revolution of the first drum this cam thrusts the rod into engagement with the above-mentioned internal teeth on the second drum. The other drums are actuated similarly.

12,240. Thomson, Sir W. Oct. 14.

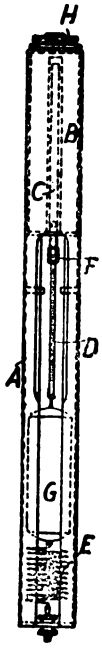

Sounding - apparatus.—Within a metal frame A is a cylindrical vessel B¹ with an inwardly - projecting cylindrical neck C. The pressure of the water forces a graduated piston-rod D into this neck against the resisting force of the helical spring E, and moves a light marker F along the rod so as to record the depth. Between the rod and spring is a float G capable of supporting the weight of the piston and half the spring, and designed to annul the disturbing effect on the piston of the shock on the bottom. A screw plug H is provided to let off any water which may leak into the vessel B. To prevent the shock on the bottom disturbing the marker, the apparatus is fitted into a cylindrical sheath suspended by a helical spring, within a long narrow can weighted at the bottom with lead and closed at the top by a screw cap: perforations are made in the sides of the can for the passage of the water. The casting-line, which is of steel wire, is wound on a drum fitted with a brake (as described in Specification No. 5675, A.D. 1883), but to prevent the wire from jumping off the drum flexible strips of sheet iron are fixed to its surrounding sheath, and curved round so as to embrace the inner edges of its flanging.

12,278. Thropp, J. Oct. 15.

Levels.—Consists of a spirit level, of which the frame is a hollow metal casting A of ∩ section open at the bottom and slotted at the top. It is partitioned off near the middle, and the spirit tube B is introduced from below and supported by the plate C. The instrument rests on the edges of the casting.

12,425. Nicholson, A. Oct. 17.

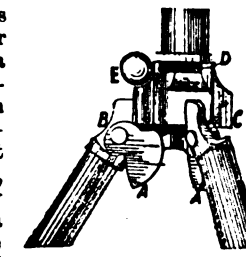

Tripod stands.—Relates to portable stands for cameras &c. The camera &c. is carried by a three-claw arrangement which may be removably attached to the male part of a ball-and-socket joint, tightened by a screw collar at the top of a telescopic standard. The lower end of the standard has a plug with three flat projections A, to which are jointed the flat parts B of plugs in the top of the legs. The projections A form stops to prevent the legs from folding inwards, and they may be prevented from moving in the opposite direction by projections on the locking-collar C bearing against the ends of the parts B. A pin D limits the motion of the collar and a knob E serves as a handle.

12,427. Johnson, J. Y., [*Richard Bros.*]. Oct. 17.

Thermometers.—Relates to registering-thermometers. A "Bourdon tube" A is fixed at one end to an arm B adjustable by the nut C and spring D; the other end is connected by levers to the spring arm E, carrying a pencil F for tracing a record of temperature on the drum G, revolved by clockwork. The pencil may be thrown out of contact with the

Digitized by Google

drum when desired. The "Bourdon tube" is placed outside the case containing the registering-apparatus, so as to be thoroughly exposed to

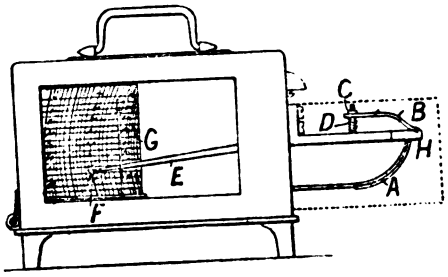

changes of temperature, and may be surrounded by an open-work protection H.

12,437. Waite, J., Waite, T. C., and **Waite, F. W.** Oct. 19.

Compasses, drawing.—The instrument is made in two parts, preferably of steel wire. The first part consists of a length of wire A sharpened at one end and bent round at B so as to grip the second part C. This consists of a length of wire formed into a helical coil D at one end, and at the other into a spiral E which is placed within the bend of A so as to turn about the rivet F. The pen or pencil is fitted into the coil D.

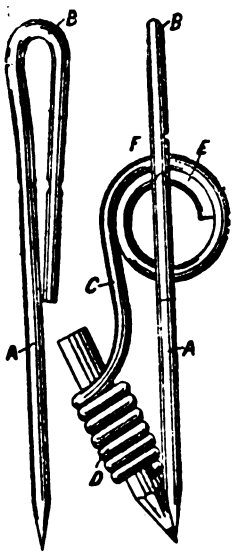

12,582. Chadwick, W. Oct. 21.

Specific-gravity estimating apparatus; barometers; thermometers.—Relates to scales for hydrometers, thermometers, barometers, and similar instruments. The Figure shows a scale adapted for an hydrometer or spirit tester. The invention consists in making the scale in two or more columns, and distributing the divisions among these, so that room is given for each to be numbered.

12,668. Groth, L. A., [*Puigsech, J. T. y*]. Oct. 22.

Rulers; squares; curves &c., reproducing.—The instrument is used for ruling parallel, converging, or curved lines, and is also capable of reproducing similar curves &c. in various positions. One form is shown in the Figure where a ruler A, or a square, is pivoted to a carrier B which slides along the guide C. This guide is formed either straight or curved as required, and projecting rims D, D run along its edges. The piece E fixed to the slide B carries rollers pressing upon the inside face of the rim D, various steadying-devices, and a spring pawl which, taking into the teeth of the rack F on the rim, regulates the motion of the carrier. When converging or curved lines are to be drawn the ruler passes also through a special form of swivelling guide fixed at the centre of convergence. For reproducing curves and irregular lines &c., the ruler is fitted with a pencil holder and is mounted in a swivelling guide.

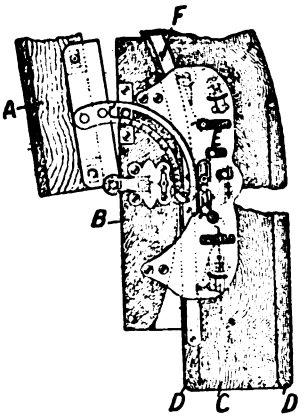

12,704. Marle, H. Oct. 23.

Squares; scales; protractors.—Upon one or both sides of an ordinary set-square are marked scales, protractor graduations, a circle, and the sides of the inscribed regular figures, &c.

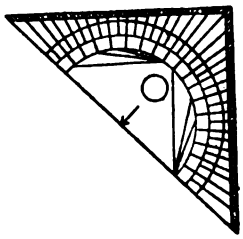

12,716. Brough, R. Oct. 23.

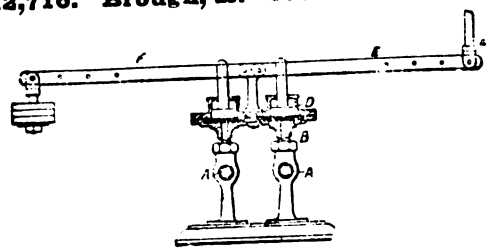

Thermometers.—Relates to apparatus for regulating and indicating temperatures. The expansion

Digitized by Google

of any suitable liquid or gas contained in the tube A actuates, through the medium of a cup-leather or of an elastic diaphragm B, a piston D connected by means of levers E to the ventilators, valves, or other regulating-apparatus, or by electrical means to fire-alarms &c. A similar arrangement provided with a weighted lever F acts as a safety-valve or regulator. A pressure gauge may be attached to the tube A and graduated so as to indicate temperatures as well as pressures.

12,921. Brust, C. Oct. 27.

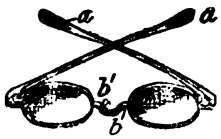

Spectacles.—Relates to appliances for "imparting "electricity to various parts of the human body." Spectacles are made with copper frames fitted with zinc plates a^1, b^1. Other pairs of metals may be used.

12,970. Hill, C. F. Oct. 28.

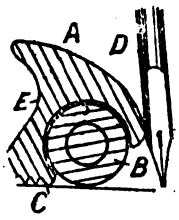

Rulers.—A shell A carries a roller B the ends of which are formed into journals which revolve in bearings in the shell at the ends. When in use, the surface C, which is serrated to obtain a better grip, is pressed upon the paper, and the roller is lifted up off it. To move the ruler, the shell is tilted, so that the roller comes into contact with, and can run along, the paper. The shell is formed with a curved face D, and a hollow E at the back to give a good hold for the fingers.

13,006. King, H. J. H. Oct. 29. *Drawings to Specification.*

Thermometers.—In connection with thermostatic apparatus for controlling the temperature of malt and hop kilns, a pointer is connected with part of the mechanism so as to indicate the temperature upon a dial outside the kiln.

13,050. Lux, F. Oct. 29.

Specific-gravity estimating apparatus.—The instrument consists of a balance A at the end of one arm of which is a globe B with inlet and exit pipes C, D. These pipes are brought round close to the fulcrum and connected there with india-rubber tubing by means of which gases or liquids are led into the globe. The other arm of the balance moves over a scale E, and thus the specific gravity of fluids can be estimated while flowing as well as when stationary. If the nature of the gas

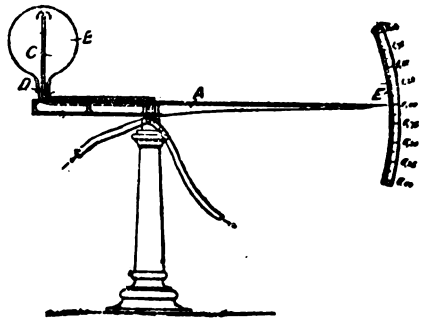

be known, the pressure can be deduced by the weight observed. Further, a mixture of known gases may be analysed quantitatively by placing between each of a series of these instruments vessels containing substances which absorb the gases one by one, and observing the specific gravity of the results.

13,269. Anders, G. L. Nov. 3.

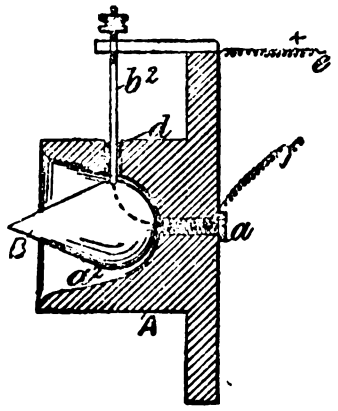

Anemometers.—The telephonic transmitter described below is stated to be applicable as a wind-pressure gauge. A body acted on by the sound waves is suspended in a cavity, and carries one contact, while the other is attached to the side of the cavity. In the form shown in the Figure the pear-shaped "collector" B is suspended in the paraboloidal cavity a^2 in the support A by a rod b^2 which is connected to one terminal e and is free to oscillate in the hole d. The other terminal f is connected to the screw a carrying one contact, while the other is attached to the collector B, which should be of low specific gravity. When wind blows into the cavity, the body moves in the opposite direction, and by attaching a suitable index the apparatus may be used as an anemometer.

Digitized by Google

13,331. Berg, C. F. E. Nov. 4.

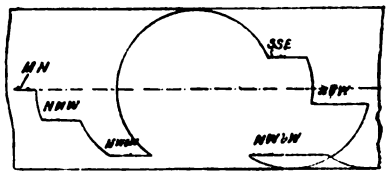

Course-recorders for ships. The compass card carries round with it a small reservoir of ink in which is mounted a little vertical disc projecting above the card. An epicyclic train from the pivot to the bottom of the reservoir keeps the disc parallel to itself. Over the disc a strip of paper is drawn by clockwork, the centre line of the strip coinciding, when the needle points north, with the radius of the card in the plane of the disc. The Figure shows the diagram thereby marked on the paper; the lines parallel to the centre one show the courses steered, their length being proportional to the time on each course. It is read by means of a transparent compass circle of the same radius as the distance from the pivot to the place where the ink disc touches the paper and with lines drawn from the points parallel to the north and south line. The disc is moved with its north point towards the commencement of the diagram.

14,205. Ashford, J. Nov. 20.

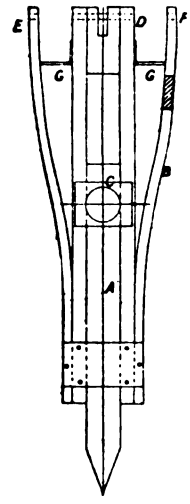

Tripod stands.—Each leg of the tripod stand consists of two parts A and B, sliding one within the other. The lower part A has fixed to the top of it two cross-pieces or cheeks C, C, by tightening which with a screw the lower half may be clamped in any position. Each leg is connected to the triangular top at three points, viz., a central point D by a bolt and ear, and two side points E and F by centres against which strips are forced out by struts G, G.

14,289. Berly, J. A., [*Couland, N.*]. Nov. 21.

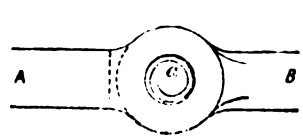

Mathematical drawing-instruments.—The head-joints of dividers or like mathematical instruments are provided with a pin formed of a steel or other elastic metal strip *a*, spirally coiled. In some cases a central pin may be secured within the coil.

14,406. Boswell, H. St. G. Nov. 24.

FIG. 1.

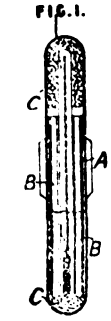

Thermometers, cases for. Cases for clinical thermometers and other fragile instruments are lined inside with india-rubber from which flexible longitudinal ribs B, B protrude towards the axis; these may be of various forms, tubular, solid, corrugated, &c. The ends are padded with cotton-wool C, C.

14,669. Duncan, W. H. Nov. 30.

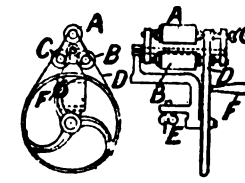

Kaleidoscopes.—Relates to a portable grinding-apparatus for domestic use combined with means for rotating kaleidoscopes. Three or more grinding-wheels A, B, C are mounted in a movable frame which may be turned so as to bring the driving-strap D into gear with a pulley on the spindle of any of the wheels. One of the wheels (say A) is a hone stone, B a grindstone, and C an emery wheel; a file wheel may be substituted for one of these for sharpening pencils. The main framework of the apparatus can be clamped to an ordinary table by the screw E, and motion is given by the handle F. On the spindle of the wheel A is a thumb-screw G by which bent pieces of wire, different coloured discs, &c. may be fixed for producing effects similar to those of the chameleon top. Supports for a kaleidoscope may also be fixed into the top of the main frame and a slow turning motion imparted by a longer strap than that shown.

14,757. Newton, H. E., [*Bliss, J.*, and *Bliss, G. H.*, trading as *J. Bliss & Co.*]. Dec. 1.

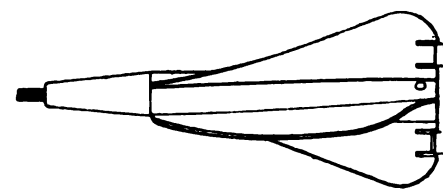

Logs.—Consists in improvements in the blades of the rotators, whereby the speed of rotation

Digitized by Google

may be regulated without altering the pitch of the blades. Supplemental fins or the like are formed in the blades, or attached thereto, which may be bent or adjusted for this purpose. In the Figure the fins are formed by slitting the blade at A, A and B, B and bending the part between as required. In other forms blades or wedge-shaped blocks may be attached to the blade by screws or rivets, or any similar method may be employed.

14,855. Sax, J. Dec. 3.

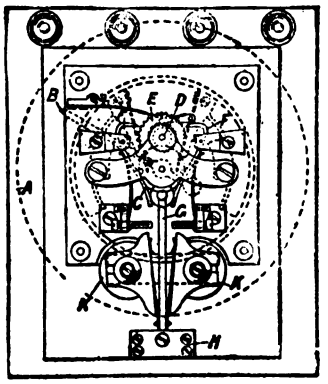

Wind vanes, electrical indicating-apparatus for. A vane exposed to the wind is connected by gearing with special electric apparatus consisting of contact-pieces controlled by tumbling-weights in such a manner that contact is made for a brief period for each definite movement of the drum. The resulting currents are sent to the indicator (shown in the Figure), in one direction if the drum moves right-handedly and in the other if it moves left-handedly. The indicator consists of a dial A and an index-finger B on the spindle of which is a toothed wheel C gearing with a pinion on the spindle D carrying a toothed wheel E. This wheel is actuated by one or other of the pawls F, F (according to the direction of the electric current), by means of the oscillating piece G of soft iron carried by a permanent magnet H. The electric circuit includes the coils of the electromagnet K, K, to the right or left pole of which the piece G is drawn as the current passes in one direction or the other. The index-finger may, if desired, be arranged to close the circuit of an alarm at certain specified points.

15,133. Scott, L. K. Dec. 9.

Levels.—Consists in mounting very small glass levels, which are necessarily of thin glass, in a jacket of thick glass with an outer jacket of metal cut away at the sides to show the internal tube. The level A thus formed is carried by springs B, B to further reduce the effect of sudden shocks.

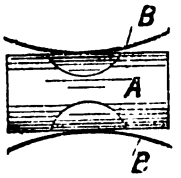

15,199. Harger, T., and Harger, J. V. Dec. 11.

Compasses, drawing.—Relates to pocket compasses. An ordinary pencil A, or pen, is held by a metal sleeve B, parts of which C are cut out and bent back. Through these is passed a screw fitted with a tightening-nut D. The leg E is pivoted on the screw, and is bent at the end F so as to fit close against the pencil point and act as a protection while carrying the instrument in the pocket.

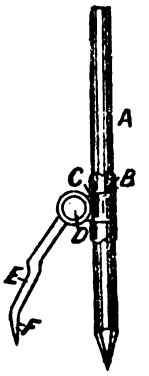

15,537. Lake, H. H., [*Berlingieri, E.*]. Dec. 17.

Compasses, magnetic.—An ordinary compass N S is mounted in the cylinder B open at the bottom upon which slides the weighted cylinder C, the connection being by means of the rods D, D¹ passing through guide-rings on C and united at their lower ends by the cross-piece D¹ K D¹. The cylinder C is moved up or down by the nut K on the screw V, which also carries the nuts E, E¹ for adjusting the position of the soft-iron bar F F¹ and the magnetized needle N¹¹ S¹¹ to which is fixed an azimuth card Z Z. A pivot P mounted in a tube T containing a spring O supports a shallow cylindrical box connected with a needle N¹ S¹ by the cap R and floating on petroleum. Under this arrangement the magnets N¹ S¹ and N S would usually be caused to deviate in opposite directions, but by proper adjustment of the magnets N¹ S¹, N¹¹ S¹¹, and the induced magnet F F¹, an equilibrium may be struck for the needle N S between the disturbing influences of the ship's iron &c. and those of the system N¹ S¹, N¹¹ S¹¹, and F F¹, and the needle caused to point true "magnetic north."

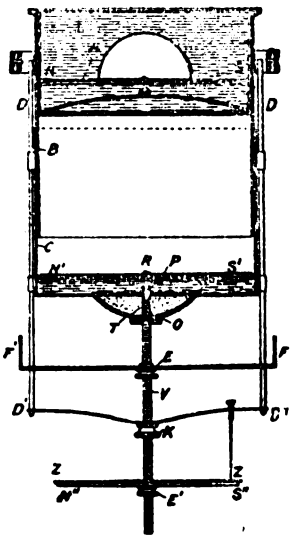

Digitized by Google

15,843. Lindley, C., and **Mudford, F. J.** Dec. 24.

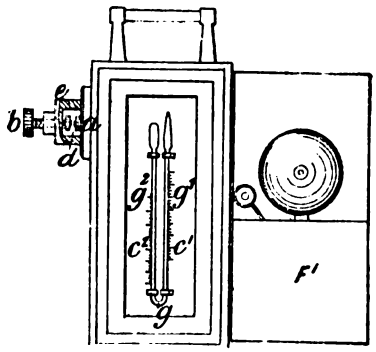

Thermometers.—Relates to alarm thermometers. To use the instrument the contact *d*, enclosed in the metal dust-proof case *e*, is made by screwing in the spindle *b*. On the temperature rising the mercury rises in the tube c^1, making contact at g^1 and completing the circuit, the points g^1 and *a* being connected through the bell mechanism F^1 and the cell. The mercury at *g* is permanently connected with the case *e*. When attention has been called the contact at *d* may be broken and the bell stopped ringing. The instrument will indicate similarly a lowering of temperature, since this produces a rise of mercury in c^2 and the point g^2 is connected with *a*.

15,938. Gautier, A., and **Pozzy, S.** Dec. 28.

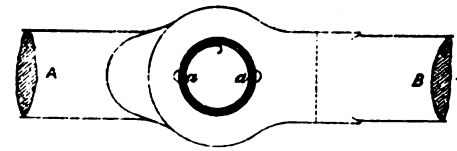

Mathematical drawing-instruments.—Relates to joint pins applicable, among other purposes, to compasses and like mathematical instruments. The Figure shows the pin used for jointing two rods A and B. It is formed of a steel or other elastic metal strip *a* spirally coiled. In some cases a central pin may be secured within the coil.

A.D. 1886.

700. Ferguson, F. O. Jan. 16.

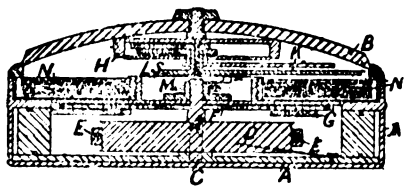

Scales or measuring-instruments for laying-off or measuring lines on plans, surveys, drawings, and the like. In a case A with a glazed cover B is mounted on a central spindle C a drum D around which is coiled a chain E with a pointer at its end. This can be drawn out through a slot in the case for the purpose of measuring or laying-off the lines, the drum and chain being thereby rotated. On the central spindle is a toothed wheel F gearing with a second wheel the axis of which carries a pinion engaging with the rack G, which is caused to protrude from the case when the drum is revolved; when the measurement has been made the rack is pushed back and coils the chain up again on the drum. To the cover of the instrument is fitted a cap H carrying two index-fingers K geared to revolve at speed in the proportion of 1 to 4. The quicker-moving finger is connected rigidly to a notched disc L; when the cover of the instrument is shut a wedge-shaped piece on a spring M engages in one of the notches of the disc L and forms a connection between the drum and the index. A series of

Digitized by Google

annular dials N, graduated with various scales, are placed below the index-fingers, the one required for each measurement being adjusted at the top of the pile.

737. Leggott, W. Jan. 18.

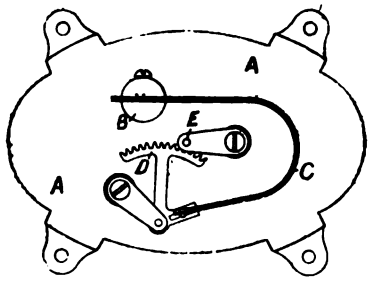

Thermometers for ovens and other hot-air chambers. On the inside of the door is fitted a case A carrying a lug B to which is fixed a curved bi-metal strip C. The quadrant D worked by this strip gears with a pinion on the spindle E passing through the door. The dial is situated outside, and its index-finger is attached to the end of the spindle E.

807. Chadburn, W., and **Smith, G.** Jan. 19.

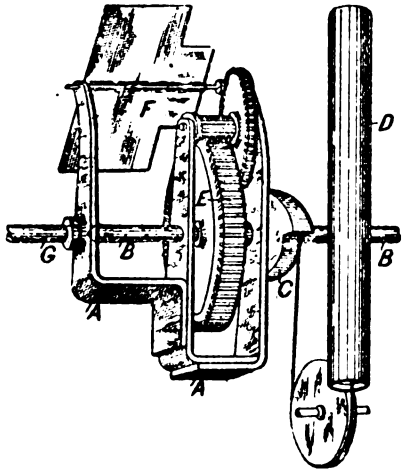

Logs.—A swinging frame A is pivoted on the spindle B, which is connected to the tow-line of the log. The motion of the frame is controlled by a stop in one direction and by a spring in the other, the cam C being connected by a chain to the spring, which may be coiled in a tube D. A toothed wheel E on the spindle B gears with the first of a train of wheels carried by the swinging frame and terminating in the fan F. When the log revolves, the fan causes the frame to swing away from its normal position, the extent of displacement being indicated on a dial by a finger fixed to the spindle G. Where it is desired to show also the direction of revolution, the movement of the frame is controlled in both directions by springs.

849. Salsbury, H. Jan. 19.

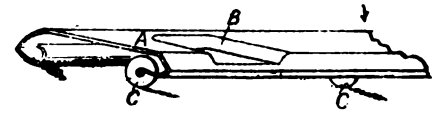

Rulers.—A curled sheet of metal A, with indents B or slots for the fingers if desired, is fitted with rollers C. The Figure shows one of various forms which may be adopted.

899. McKellen, S. D. Jan. 20.

Tripod stands.—The object is to facilitate the folding and erecting of tripod stands. This is effected by a clamp consisting of a strap A which is tightened by folding down an eccentric-headed lever B.

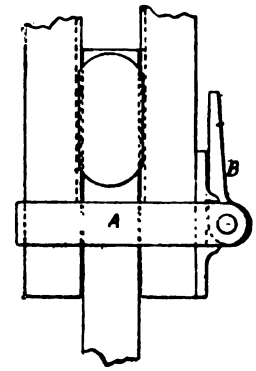

949. Wilson, W. E. Jan. 21.

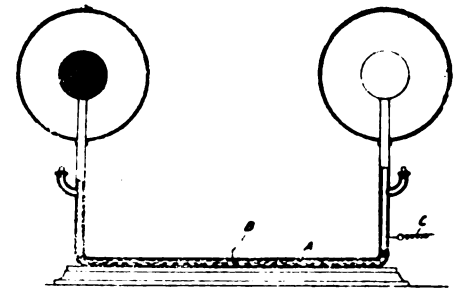

Sunshine-recorders; thermometers.—The invention consists in the employment of a differential thermometer, which may be of various types, one

Digitized by Google

sensitive part of which is exposed to, and the other shielded from, the sunshine. When the sun is obscured the two readings of the thermometers will be the same, but will differ as soon as the sunlight falls on the instrument, and the consequent motion of an index makes contact between two platinum wires in an electric circuit. The recording-instrument consists of a drum revolved by clockwork, the axis having a screw cut upon it passing through a tapped socket, so that the drum receives a motion of translation as well as rotation. The clock completes the above-mentioned circuit every minute and excites a magnet the armature of which carries a pricker which is forced through a paper strip on the drum: the record thus obtained may be used for printing duplicates. The apparatus may be much simplified if the recorder can be placed near the thermometer, or if only one recorder is desired. The Figure shows the application of a differential air thermometer, the movement of the mercury thread A making contact between the platinum wires B, C. In some cases two mercurial thermometers are employed with stems of large bore provided with plungers connected by a link which is prolonged to carry a marker. Or a thermometer with a bi-metallic spiral spring may be employed.

1038. Bisson, E. Jan. 23.

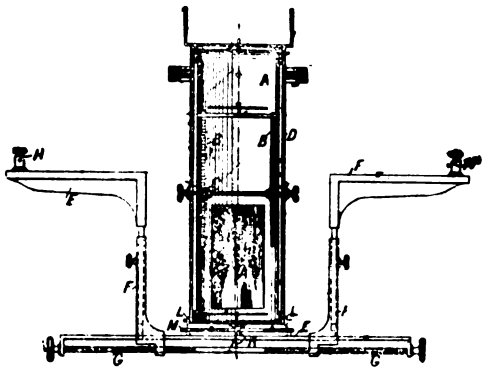

Compasses, magnetic.—Two or more needles A, A, vertically adjustable by a rack B and pinion C or similar means, are mounted in the cylindrical gimballed box D. To the bottom of the box is pivoted a bar E, along which the brackets F, F are caused to travel by the right and left handed screw G. The upper parts of the brackets are vertically adjustable and carry compensating bar-magnets in the stirrups H, H. The brackets can be turned right round the compass box on the pivot K, the position being determined by pointers L, L on a graduated circle M. The necessary adjustments for varying latitude &c. are made by certain experiments.

1345. Dines, W. H. Jan. 30.

Anemometers.—The Figure shows a view in a vertical plane parallel to the direction of the wind. At the front end of the spindle A mounted in bearings O is a pair of helicoidal blades M, and at the back are the sails B attached to a rod E which is capable of being turned slightly by

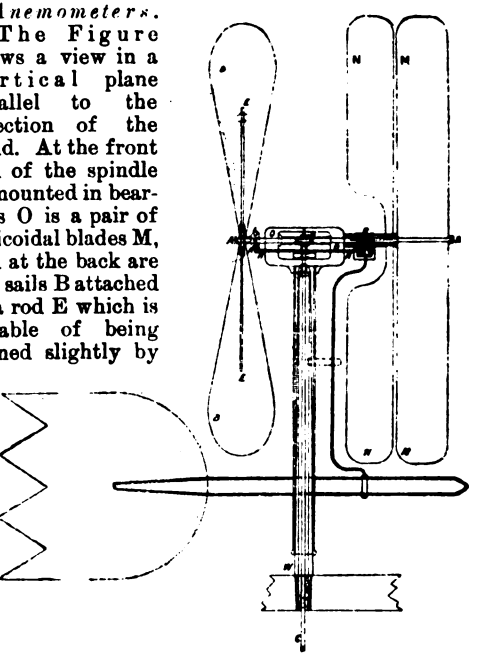

cranks from a sliding rotating collar L. A loose sleeve on the spindle A carries four flat vanes N at right-angles and has a thread R on it engaging with a grooved cylinder on one end of a rod H, the other end of which has a tongue K fitting into a groove round the collar L. When the spindle A is turning with an angular velocity having a certain ratio to the linear velocity of the wind, the vanes N remain stationary, but when the ratio alters the wind is deflected by the rotating blades M on to the blades N and turns them, thus altering the pitch of the sails B till the required speed is attained. The spindle A communicates its motion to a vertical shaft C through the worm D and spur-wheel gearing, and the velocity is ascertained by a counter worked from the shaft C. The apparatus is kept to the wind by a large vane below.

1353. Phillips, A. Jan. 30.

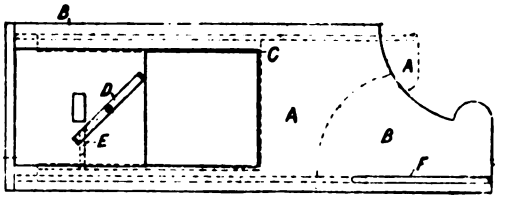

Magic-lanterns.—The slide carrier A (shown in dotted lines) works in grooves in a stationary

Digitized by Google

frame B, and the pictures are dropped into it from above. To ensure the correct centering of the pictures, they are pushed forward by a shoulder C on the carrier until they come in contact with the lever D pivoted to the frame and thrown back to meet the slide by the stop E on the carrier. A mask plate with apertures of various shapes can be moved into any desired position by a button passing through the slot F in the frame B.

1938. Derham, T. Feb. 10.

Specific-gravity estimating-apparatus.—Relates to hydrometers and saccharometers in which a series of poises is used to extend the range of the instrument and prevent the necessity of a long stem; the invention consists in so constructing the poises, with reference to the bulk and specific gravity of each, that the stem shall indicate the same number of degrees of specific gravity whichever poise is in use. For this purpose the poises are made, respectively, of a bulk equal to once, twice, thrice, &c. that of the graduated stem; also, if G be the initial specific gravity of the instrument and a the number of degrees shown on the stem, the nth poise of the series has a specific gravity $2G + (n + 1)a$.

1980. Bruster, J., and **Gibbs, J. M.** Feb. 11.

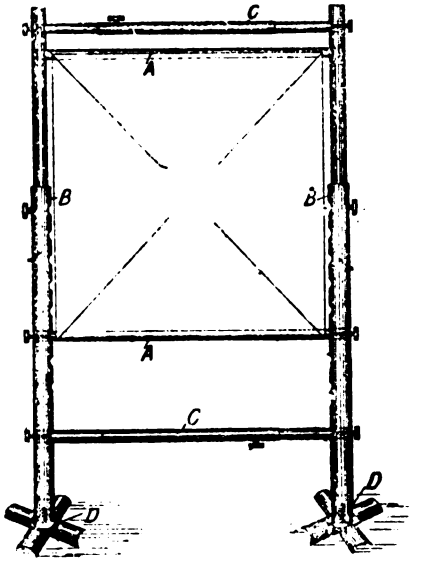

Magic-lantern apparatus.—The sheet is made of transparent paper or cloth, and coloured to produce the effect of tinted slides. It is then mounted on rollers A, A which are fixed by thumb-screws into holes in telescopic pillars B, B held in position by cross-stays C, C, also telescopic and standing on removable part-tubular feet D, D. The sizes of the various pillars and stays are such that they can be all packed within the largest for convenience of carriage.

1991. Sporton, H. H. Feb. 11.

Current meters.—Relates to apparatus for estimating the flow through a sluice valve casing. The valve is removed and a tube A inserted in its seat. This has a horizontal spindle B on which slides a valve C, the movement of which is communicated to an indicator pencil by lazy-tongs lattice bars D and the rod E. The diagram barrel is rotated by clockwork so that a continuous record is obtained. The rod E passes through a small stuffing-box inserted in the main one of the sluice valve.

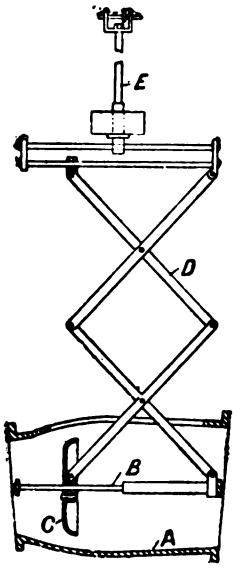

2039. Lucas, H. Feb. 12.

Tripod stands.—Relates to a method of clamping the telescopic parts of the legs of the stand. This may be done by forcing a ferrule with saw cuts into a conical nut, or by a tongue piece F pressed out through a slot by a spring G.

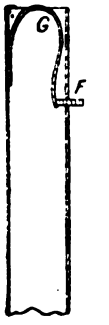

2130. Butler, A. E., and **Butler, H. M.** Feb. 13.

Levels for levelling shafting. Two steel bars a, a, bent as shown, have two stops b, c on each. The

Digitized by Google

distance between these two stops is accurately the same on each bar. They are hung on the shaft *d*,

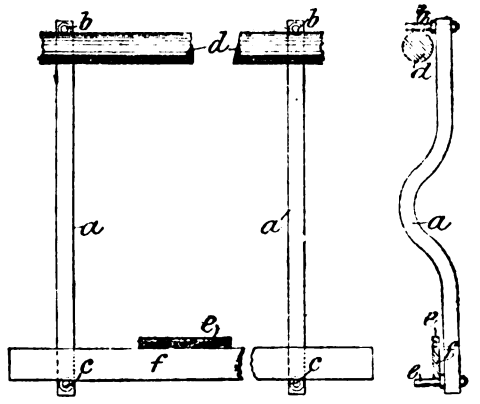

and a straight edge *f* with a level *e* is placed on the lower stops *c*, *c*.

2423. Rayment, A. Feb. 19.

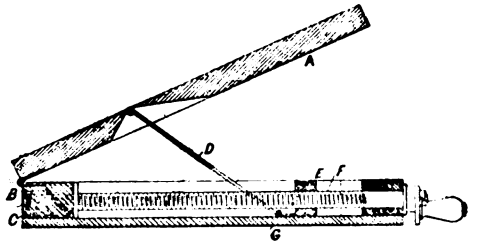

Tripod and like stands for photographic cameras. The top of a tripod or other stand is constructed to enable the camera to be tilted through any required angle. For this purpose the board A, on which the camera is fixed, is hinged at one side at B to another board C fixed on the tripod top. The board A is supported in any position by a stay rod D on the end of which is a nut E actuated by the screw F. The board A can thus be set at any angle by moving the nut E. In order to keep the centre of gravity of the camera over the tripod stand, the part C is made to slide transversely on the part G attached directly to the tripod top.

2459. Wrench, A.. [*trading as* J. Wrench & Son]. Feb. 19.

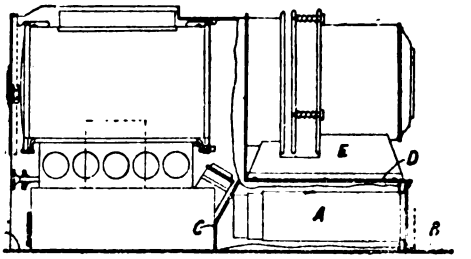

Magic-lanterns.—Consists of various improvements in detail, of which the following are the principal. The body of the lantern is extended in front to form a receptacle A in which the lamp chimney is packed and held in its place by the hinged catch B. The receptacle is separated from the body of the lantern by a partition C which acts as a stop for the lamp, and prevents the light from showing through in front. On the top of A are formed two guides D in which slide a casting E carrying the stage and "O G" tube. The door of the lantern is closed by the usual catch, to which there is added an inner projection so that, holding firmly on both sides, the door acts as a stay to steady the whole. At the back the lanterns are transversely slotted along the bottom and a thumb-screw passes through the slot; by this means the lantern may be adjusted laterally about a pivot in its toe-plate. To fix the lantern on the top of its case, which is used as a stand, a pair of sliding and swivelling rods run along the inside of the top of the case; these terminate in hooks, and when required for use are drawn forward slightly out of the case and rotated to bring the hooks into a position to grasp the back of the base-plate.

2495. Eskell, C. A. Feb. 20.

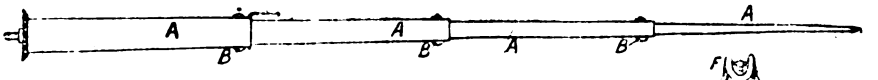

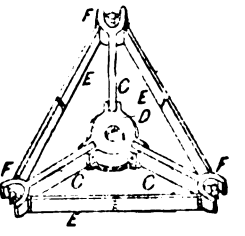

Tripod stands.—Each leg of the tripod consists of two or more triangular pieces A, A which telescope one into another. When the legs are drawn out to their full extent tongue pieces B, B are forced out by springs into slots in the tube and fix the respective pieces in place. The head is also constructed to be collapsable. Three radial arms C, C, C are connected to a central boss D by hinged joints. Hinged stay rods E, E, E are connected to the ends of the radial arms, keeping them apart, and giving a broader support to the camera. The legs are attached to forked ends F, F, F of radial arms by pivots. When a leg has been shut up a hinged clip cap is folded over it.

Digitized by Google

2520. Thomson, J. Feb. 20.

Thermometers.—The apparatus consists essentially of an expansion chamber in which is placed some fluid such as ether ; a connecting-tube leads from the expansion chamber to a pressure gauge which may be graduated for various purposes, and a branch tube leads to a diaphragm which is made to actuate regulating-valves. The Figure shows an arrangement for indicating and regulating the water level in a steam boiler, but an analogous arrangement may be used for controlling the flow of heated fluids through a pipe, and for regulating and indicating the temperature of hot chambers, ovens, &c. The expansion chamber A is placed in an enlarged portion of the tube B which leads into the boiler at both its upper and lower ends, the enlarged part being at or near the normal water level. Should the level fall, the expansion chamber becomes surrounded by steam which is at a higher temperature than the water in the lower part of the boiler. A consequent increase of pressure will take place in the chamber A, which will be communicated to the pressure gauge C (graduated for levels), and to the diaphragm D which operates a valve E controlling the feedwater supply. The pressure may be indicated on a separate gauge connected by a tube passing into the boiler below the level of the water. The diaphragm E may also sound an alarm, control an overflow valve, or operate a safety-valve.

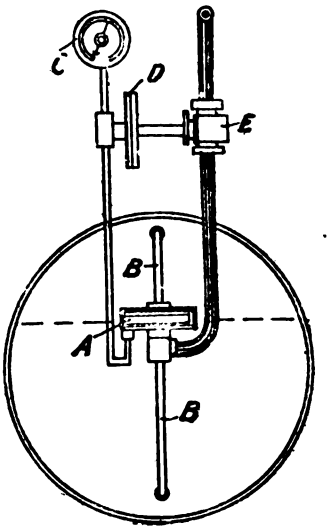

2527. Dalrymple-Hay, H. H. Feb. 22.

Railway and like curves, setting out.—The instrument is of the nature of a theodolite, and is mounted when in use on a tripod stand with the usual levelling-arrangements ; it is intended for setting out curves by "Ranкine's method," but dispenses with the use of curve tables and with the repeated setting of the telescope by the vernier. The sighting-telescope is mounted on a standard A working in a coned bearing and having a projecting arm B ; a graduated spindle C is journalled in this arm and in the centre of a dial face D, and terminates in an index-finger. On the spindle is an adjustable slide E with a wheel F to roll on a horizontal table G, which is mounted on an arm H carried by a sleeve on the coned socket. The various parts are fitted with the necessary clamping and slow-motion devices, and the table G is marked with a graduated circle read by a vernier attached to the central standard. The action is as follows :—The slide E is set on the graduated spindle according to the radius of the curve to be ranged, and the motion of the telescope in sighting for successive points is effected by moving the arm B, the extent of the movements being shown by the index-finger on the dial D. Where a change of position of the point of observation is necessary, and the whole instrument has consequently to be moved, the telescope is adjusted with reference to the graduated circle on the table, it being necessary then to turn it through 180° after sighting the original position before continuing the ranging of the curve.

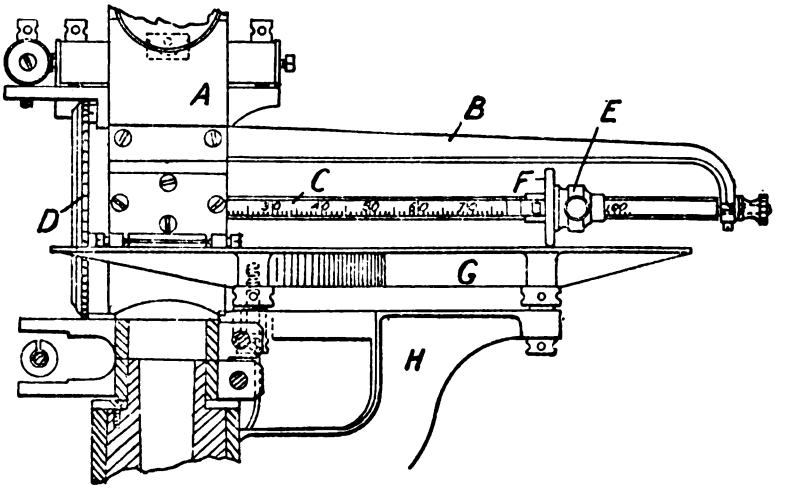

Digitized by Google

2622. Swift, J. Feb. 23.

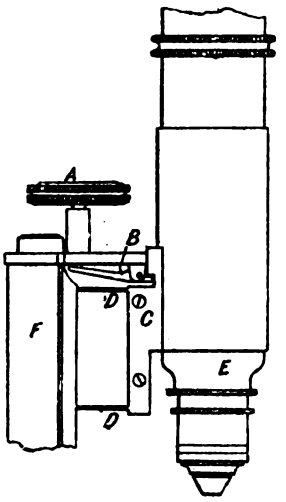

Microscopes.—Greater delicacy of fine adjustment is obtained by causing the usual milled-headed screw A to move the microscope tube E against the plate springs D, not directly, but through the medium of a pivoted lever B having the arm upon which the screw acts longer than that applied to the microscope tube.

2764. Imray, J. Feb. 25.

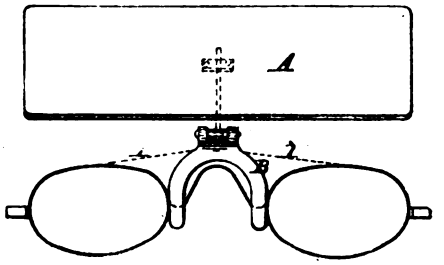

Reflectors; spectacles.—Relates to a reflector for throwing light on books &c., as for instance in railway carriages. An adjustable mirror A is pivoted to a clip B which fits upon the bridge of a spectacle frame, or, if lenses are not required, upon a frame shaped as indicated by dotted lines.

2946. Blakey, J. March 2.

Squares.—Joints for connecting the bars of T-squares, frames, &c. are formed of cast or sheet metal with prongs or points so that they can be attached without the use of separate nails; they may further be of an ornamental character. The Figure shows their use for connecting a frame together at the corners.

2967. Hicks, J. J., and **Tight, C.** March 2.

Levels.—The block of a spirit level carries a flat chamber B having a glass front surrounded by angular graduations and a white back. This is either half filled with spirit or filled so as to leave only a small bubble.

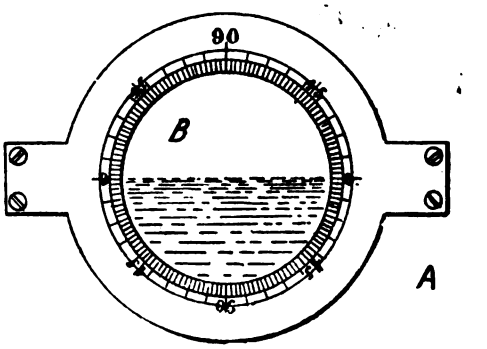

3023. Murrie, J. March 3.

Thermometers; barometers.—Relates to apparatus for indicating temperature or pressure. The indicator A is of the 'Bourdon pressure gauge' type and is connected by the tube C with a chamber B (or two connected chambers) containing a fluid which exerts pressure by its expansion on heating. The improvements consist in exhausting the casing of the gauge of air so that the curved tube is *in vacuo*, and in creating an initial pressure on the liquid to prevent boling or vaporization. The tube C may be fitted with a plug or cock D to regulate the volume of the liquid, and the apparatus may have a double indicator or be combined with a chronometer, barometer, or glass mercurial thermometer of ordinary construction. The apparatus may be combined with pressure-indicating apparatus.

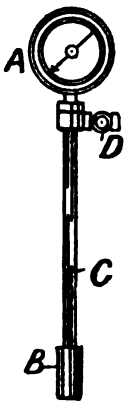

3136. Doehring, W. March 5.

Thermometers.—Platinum wires fused into the stem are so connected with a button B and contact-breaker C that call and recording apparatus are brought into action when the temperature falls below or rises above certain points. When the temperature is below the minimum, the current flows through the pillar D, armature E, pillar F, and wire G to a signal box and bell, whence it returns by the wire H. While the temperature is between minimum and maximum the current flows through the magnet coils K, the mercury, and the wire L. The excited magnet attracts the armature E, thereby breaking the former circuit and stopping the alarms. On the maximum temperature being reached, a part of the current returns from the mercury by the circuit M, in which a second signal and alarm are included. An auxiliary battery is

Digitized by Google

put in this circuit. In addition to the ordinary signal box, there may be sets of electromagnets to record the times of the alarms. On a clock-driver drum, and in connection with bells, there may be two

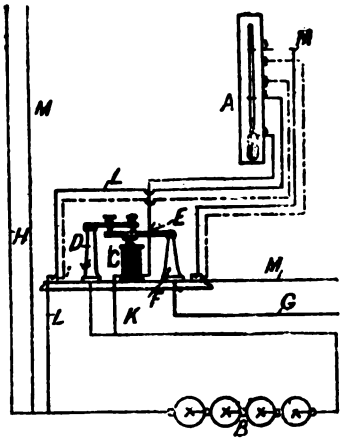

special clockwork current-breakers to print a word by Morse code apparatus. If one of the poles of the auxiliary battery is connected with earth the current in the maximum wire M may be switched into the circuit of a fire-brigade station. Different minima and maxima may be used by having a series of wires from the thermometer to a plug rail, as shown in dotted lines.

3155. Guinness, L. H. March 6.

Thermometers, protectors for. Relates to a protecting-case for use when plunging thermometers into liquids. A long metal tube A has a handle B at one end and a screw cap C for securing the thermometer at the other. At the cap end the tube is partly cut away and slotted to expose the bulb of the thermometer and allow its index to be seen. Over the tube A slides a protecting-tube D, which can be pushed forward to cover the thermometer while it is being inserted in the liquid, and afterwards drawn back.

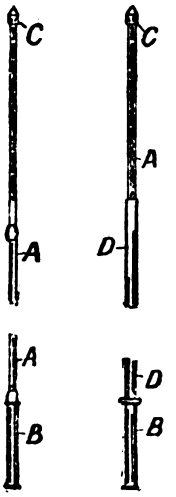

3172. Vetch, G. A. March 6.

Surveying-instruments. — Relates to means for measuring distances, the method being based on the fact that, when small, the angles subtended by a line of known length may be considered inversely proportional to the distances of the points at which they are subtended. A tripod stand A carries a horizontal rod B on which a known length is defined by lines C forming the inner boundaries of coloured bands painted on a white ground. A terminal shoe D is used as a plummet and marks

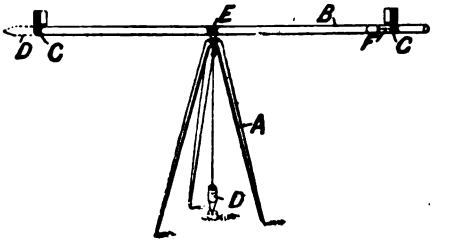

one end of the distance to be measured, while at the other end is a theodolite to measure the angle subtended. In the centre E of the rod are sights by which it may be set at right-angles to the line joining plummet and theodolite. For very long distances the length of the rod may be increased either telescopically or by pieces to screw in. To reduce errors in observing the angle, a series of readings should be taken, each starting where the other left off, and the total angle reached should be divided by the number of observations. By means of divisions F marked at the end of the rod, fractions of a minute may be ascertained from a proportion involving the distance calculated without the fraction of a minute; or it may be guessed at.

3290. Webber, B. K. March 9.

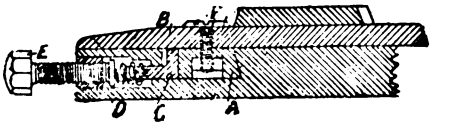

Squares.—Relates to combined T-squares and drawing-boards. A dovetailed groove is made along one side of the board, and in this slides a tongue A fastened to the head of the T-square B. The piece is kept up against the inner side of the groove by a fillet C, which is pressed inwards by springs D attached to adjusting-screws E, which are also utilized as set-screws to prevent movement of the T-square. In a modification, the tongue fills the groove and has rollers underneath, while the screw E attaching it to the square is replaced by a screwed bush with wing-bolt for locking the square.

3425. Watkin, H. S. S. March 11.

Barometers.—Relates to dial indicators specially applicable for aneroid barometers. The pointer slides longitudinally while revolving, so that the end describes a spiral; in this way it may make more than one revolution while still showing a continuous reading. The sliding is effected by means of a fixed barrel having a cord wound upon it, the ends of which are attached to the ends of the pointer. Or the pointer may have a rack

Digitized by Google

gearing with fixed pinions. The Figure shows two positions of the pointer.

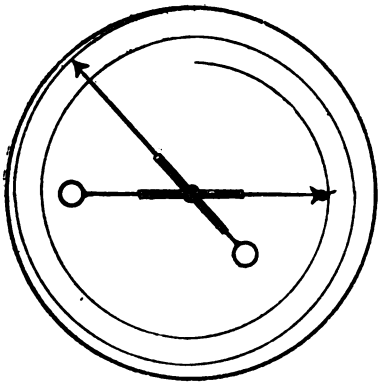

3594. Calderara, S. A., and **Calderara, A. J.** March 13.

Specific-gravity estimating apparatus.—Consists in blowing the bulb of a hydrometer in a mould so as to obtain an exact bulk and any required vertical and horizontal sections. The Figure shows an instrument with a square bulb A; the lower mercury bulb B is preferably attached subsequently, and the scale tube C is fixed to the conical part D of the upper bulb. Instead of mercury, shot held together by sealing-wax, or a readily-fusible alloy, may be used for weighting the instrument.

3625. Normanville, S. A. de. March 15.

Barometers. — Relates to a modification of the form of barometer known as the sympiesometer. The object is to dispense with the ordinary temperature corrections; for this purpose a thermometer A is mounted beside the manometer B on a sliding block C which carries the barometer scale. The size of the bulb D is so calculated that the travel of the liquids in the manometer and thermometer are equal for equal changes of temperature. The liquids having been adjusted at the same level will remain so whatever the temperature so long as the barometer pressure does not vary. The index E is fixed to the frame to read correctly by comparison with a standard barometer. Any difference of level between the liquids in A and B shows a change of pressure, and on readjusting the slide C by the button F (so as to bring the liquids again to the same level) the altered pressure may be at once read off by the index E.

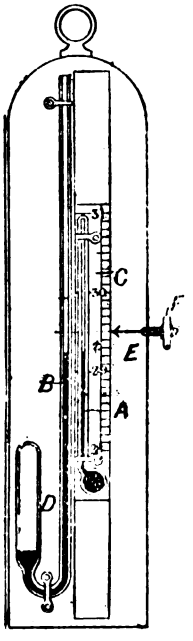

3805. Whitefield, H. M., and **Washington, S.** March 18.

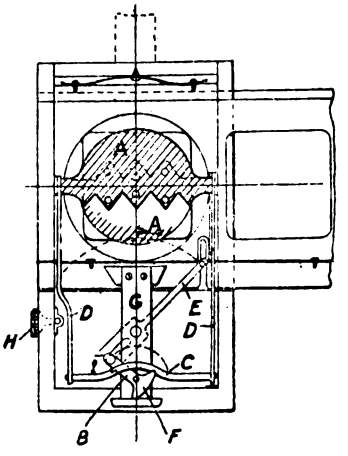

Magic-lanterns.—A pair of shutters A, A are pivoted between the objectives and condensers; they are closed by the crank B on a spindle running to the back of the lantern and ending in a handle; the crank is turned backwards and forwards through half a revolution, and its pin depresses the connecting-rod C of the arms D, D which actuate the shutters. A pivoted arm E slotted at one end is also acted upon by the crank for moving the slide carrier when the shutters are closed, while the cam F forces a strong spring G forward to hold the carrier fixed while the picture is being exhibited. At the proper moment the shutters are opened and the spring G pushed back by springs. The objectives are focussed from the back of the lantern by means of a rack and pinion operated by the button H.

3967. Jones, J. G. March 20.

Sounding-apparatus.—In a long cylindrical case A is fixed about the middle a corrugated india-rubber tube B closed at the bottom by a cap and surrounded by a coiled spring. To the cap is screwed the rod D, which passes upwards and ends in a head E engaging with a forked projection on the endless band F. An indicator G is also carried by the endless band. Water is admitted to the interior of the instrument through a perforated

Digitized by Google

cap H, and elongates the tube B according to the pressure, while the rod D draws down the endless band and raises the indicator; as the pressure

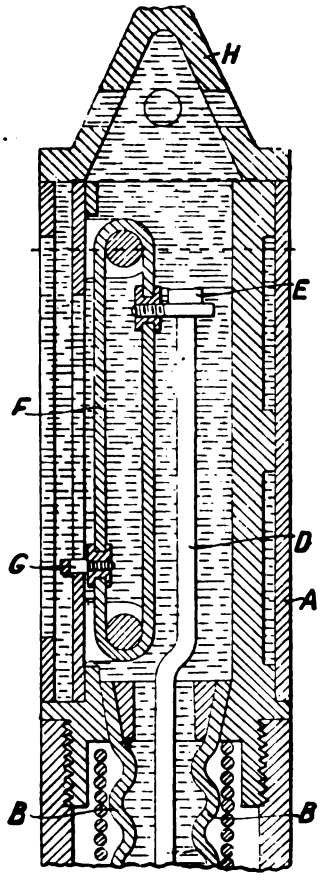

diminishes, the rod leaves the forked projection and consequently the indicator remains in its highest position and records the depth.

4375. Rohrbach, C. E. M. March 29.

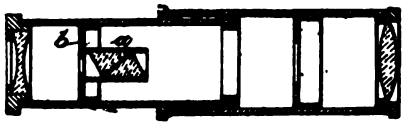

Telescopes; optical instruments. — Consists in placing a polarizing-prism in a suitable part of an optical instrument to cut off light polarized by reflection from bright surfaces, particles of dust, &c. In the case of a telescope the prism *a* is placed close to the diaphragm *b* of the eye-piece. The plane of the main section of the prism should be arranged to pass through the source of light.

4433. Smith, C. G., Warren, E., and **Warren, C. H.** March 30.

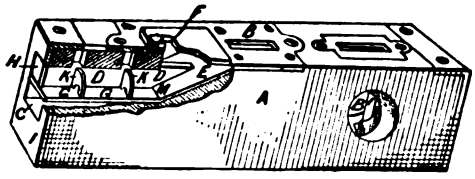

Levels and plumb-rules; clinometers.—Relates to an instrument forming a combined level and clinometer. A truly-squared block A is provided with two spirit levels B and B¹ for levelling and plumbing respectively. At one end there is a longitudinal hole C, divided by a partition D and ending in a mirror E inclined at 45°. Above this mirror a transverse slit F can be moved, and at its base M are hinged two slips of wood G and H which can be inclined by raising a slide on the front face I. Their inclination is read off from a mark on the slide and graduations on the face. To ascertain the angular elevation of an object the instrument is first placed so that the level B shows horizontality, then the slide which inclines G and H is raised, and the slit F is moved, until on looking through F the object and the front edges of the slips appear in the same place of the mirror. The slip G has two perforated diaphragms K to aid the sighting.

4449. Milligan, J. W., [*Weissenborn, E.*]. March 30.

Compasses, drawing; dividers.—On an ordinary pencil A is a sliding sleeve B to which are pivoted either one or two compass legs C with their points bent inwards so that, when closed, they shall fit close to the pencil point, and lie buried in slots E cut in the point protector F. The legs are of thin metal stamped to a U form in section and are pivoted between pairs of ears H. On the pivot pin inside the leg is a small disc, and the ends of the pin are riveted to dished spring washers I pressing against the ears to give the requisite stiffness of movement.

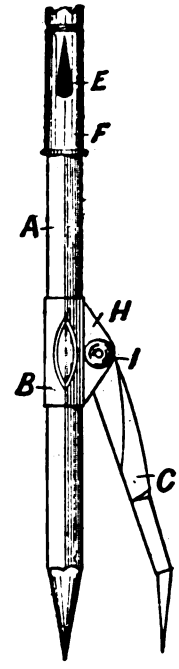

Digitized by Google

4591. Lake, H. H., [*Schneider, K.*]. April 1.

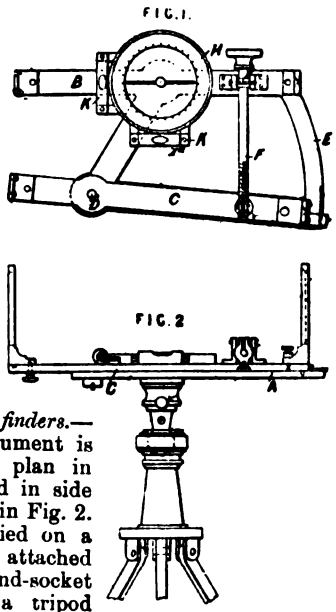

Range-finders.—The instrument is shown in plan in Fig. 1, and in side elevation in Fig. 2. It is carried on a frame A, attached by a ball-and-socket joint to a tripod stand. The frame A carries two arms B, C, of which B is attached rigidly to the frame, while C is pivoted to it at D and can move over the concentric arc E. The arm B carries sights, as also does the arm C. The arm C is first placed in line with the object, and then the arm B is, by means of the micrometer screw F, also placed on the object, the distance being read off upon the arc E. H is a compass, and K, K are spirit levels for use when setting the instrument.

4624. Stanley, W. F., and **Sarjeant, W. L.** April 2.

Actinometers.—The sensitive paper, which is prepared from a bromide salt (instead of the usual chlorine salt) is rolled round a pin in a small circular metal case and brought out through a slot in the case and through a box with a glass top fitted on the edge. The glass is partly covered with tinted paper, by which the exposure is estimated. The actinometer may be suspended from the watch chain.

4739. Weldon, F. April 5. *Drawings to Specification.*

Range-finders, measuring lines or tapes for use with. The object of the invention is to so graduate measures of length on reduced scales that they may be used without calculations with range-finding instruments. For example, with the range-finding instrument described in Specification No. 2589, A.D. 1883, a triangle is obtained, the known base of which is one-fiftieth of the distance to be obtained. The tape measure used to measure this base is graduated with a scale of one yard to fifty. In case this base is very long a further observation is made giving a line to be measured $\frac{1}{100}$ of the distance to be obtained, and the other side of the tape measure is graduated with the necessary scale.

4888. Wolski, F. R. de. April 7.

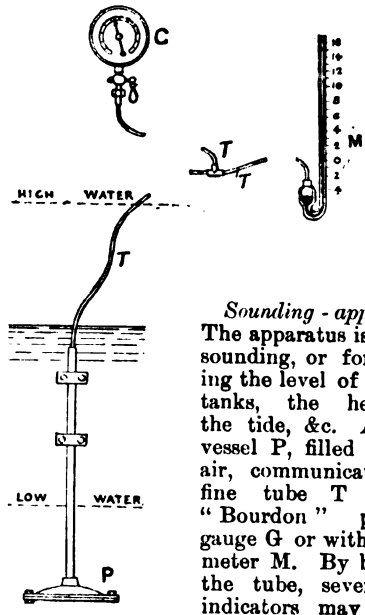

Sounding-apparatus.—The apparatus is used for sounding, or for indicating the level of water in tanks, the height of the tide, &c. A flexible vessel P, filled with dry air, communicates by a fine tube T with a "Bourdon" pressure-gauge G or with a manometer M. By branching the tube, several such indicators may be used simultaneously. P may be fixed at the bottom of a tank &c. or at a sufficient depth in the sea to be always immersed and uninfluenced by the waves. Apparatus may also be provided for keeping a continuous record and for ringing an alarm when certain specified levels are attained.

5139. Cooper, T. April 13.

Camera obscuras.—The images in a camera obscura are hidden by a screen which can be removed for a limited time by dropping a coin into a slit in a case containing the screen. The case A is provided with apertures *a* through which, when an internal shutter *d* is removed by the insertion of a coin through a slit *n*, the images can be seen. In the Figure is shown one kind of mechanism for actuating the shutter. A pair of counterweighted levers *e*, carrying the shutter, are pivoted on studs *f* to the sides. The ends of these are connected by a piece e^3 shaped to receive the coin which passes through the slit *n* along the shoot *o*. The weight of the coin causes the levers to descend, and so removes the shutter. When the levers reach the position shown in dotted lines the coin falls into the receptacle *d*. The return motion is

Digitized by Google

delayed, preferably by a fly *k* attached to a pinion *j* which the lever on its return rotates through the ratchet device shown.

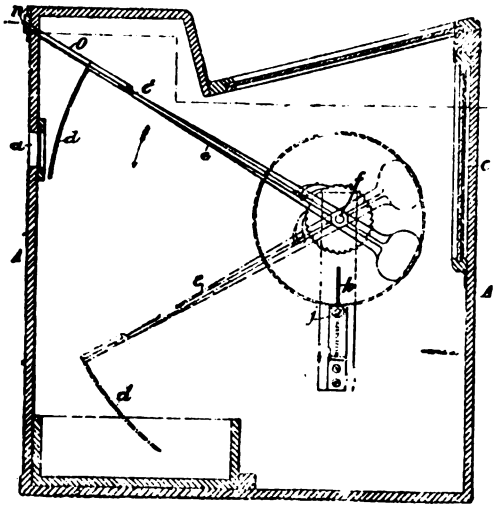

5407. Stanley, W. F. April 19.

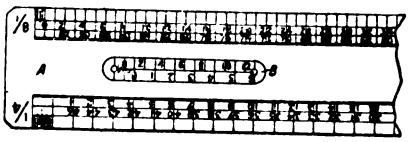

Scales.—The scale A is provided with a duplicate scale B of some hard material such as metal, ivory, or vulcanite, fixed away from the edge. Upon this small dimensions may be taken by compasses, the working scale thus being kept uninjured.

5636. Pumphrey, C. April 24.

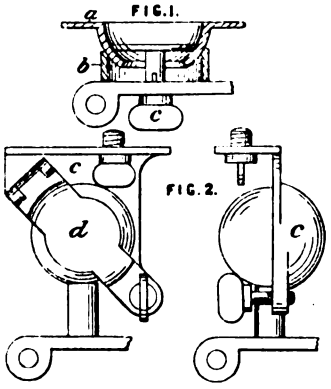

Tripod stands for photographic cameras. Relates to a ball-and-socket joint for attaching the legs to the camera. Fig. 1 shows one arrangement; *a* is a flange on a hemisphere for attaching it to the camera, and *b* a ring or short tube fixed to the leg, which may be pressed against its surface by a screw pin *c*. In the arrangement shown in Fig. 2, a sphere is grasped between two partial sockets *c* and *d* on opposite sides of it. Either the ball or the socket may be fixed to the camera.

5794. Massey-Mainwaring, W. F. B. April 28.

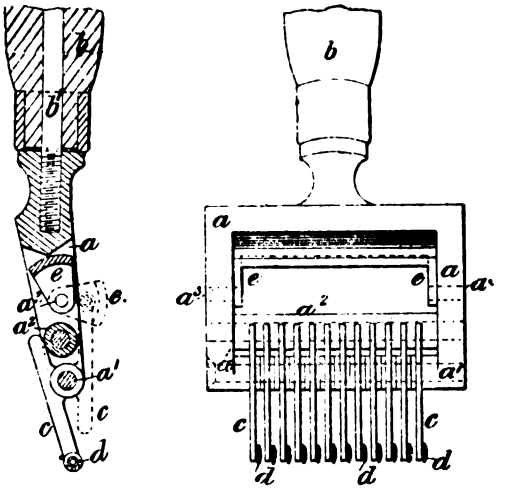

Ruling-pens.—Relates to apparatus for producing parallel lines of perforations or of pencil, ink, &c., applicable for copying or printing music and other purposes. For producing stencils in waxed paper as is described in Specification No. 2450, A.D. 1881, perforating-discs *d* are mounted on fingers *c* pivoted at a^1 in a frame *a*. For producing parallel lines on any surface, discs of lead or other material, such as are described in Specification No. 8629, A.D. 1885, are substituted for the perforating-discs *d*; or a number of writing or ruling pens may be used as described in Specification No. 8628, A.D. 1885. The rear ends of the fingers are extended and press upon a rubber or flexible roller a^3, so as to allow the discs to readily adjust themselves to the surface when in use. Any of the fingers may be turned up out of use and secured by a shield *e* pivoted at a^3, as shown by dotted lines. The frame *a* is swivelled upon a handle *b* by the pin b^1. When ink or colour lines are to be drawn the colour is supplied from reservoirs in the fingers *c* or by a roller resting on the discs.

5996. Redfern, G. F., [*Stang, H. G. J.*]. May 3.

Maps and charts, setting out courses and bearings on.—Relates to an instrument for tracing on a map the course of a moving object, such as a vessel at sea under observation from an elevated

Digitized by Google

point, applicable also for laying down coast lines. The object, or the coast line, is followed by the telescope A, which is connected to a slide B, with cross-wires or a pencil, moving over a map on the

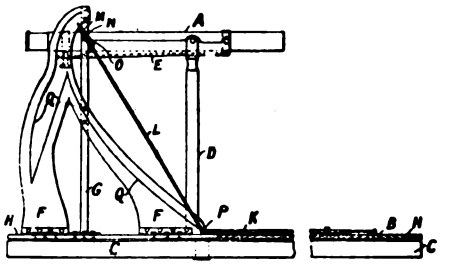

base-plate C of the instrument. The standard D supports the cradle E of the telescope and, with the guide-plate F and support G, is fixed to a plate H in which are formed the guides for the slide B, and which is pivoted on the base-plate C. The slide B is attached to a rod K pivoted to a second rod L passing through a socket M fixed to the pinion N; N gears with a pinion O, which gives motion to the telescope cradle by the rack formed thereon. At P is a handle which is caused to follow the guiding-curve Q, Q, Q, and thus changes the inclination of the telescope and the position of the cross-wires or pencil, to follow the motion of the object towards the observer. At the same time the whole instrument is turned on its pivot to follow the motion at right-angles. The various parts are adjustable to allow for different heights of the observing-station above the sea-level.

6154. Noakes, D. W. May 6.

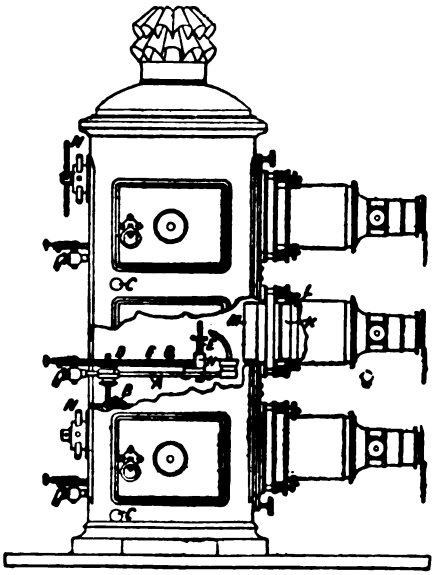

Magic-lanterns. — Special arrangements for adjusting the lime-light apparatus and specially-constructed dissolving-cocks are described. The Figure shows a triple dissolving lantern. To regulate the size of the views, masks K with variously-shaped apertures are employed; these slide easily into the hood L. To obviate the fracture of the lenses by heat the condensers are arranged to slide into a very thin metal ring M so attached to the condenser tube that it can readily expand.

6275. Martin, E. May 10. *Drawings to Specification. Amended.*

Compasses, magnetic, combined with foghorns. A compass is mounted in gimbals on the cover of a special portable hand or foot actuated foghorn.

6337. Hulse, W. W. May 11.

Levels and plumb rules. —The instrument is designed to show verticals as well as levels, and also to exactly indicate slight deviations. It consists of a graduated spirit tube A fitted into an L-shaped frame B, the two arms being at right-angles. The

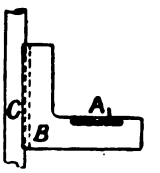

arms may be grooved on the outer edges for holding against circular shafts, such as C. Various modifications in detail can be made; for instance, the frame may be square and the level fitted to either the upper or lower side.

6353. Wilke, C. F. F. May 11.

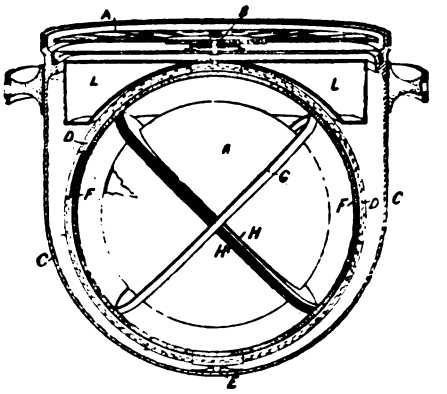

Compasses, magnetic.—The card A is fixed to its pivot B working through a cap on the cover of the bowl-shaped case C. A soft-iron ring D of U section is fixed to B and to a pivot E working on the bottom of the case. Guided by this ring, but capable of rotation in a vertical plane within it, is a ring magnet F formed of two half-rings, of magnetized steel and soft iron respectively, fixed

Digitized by Google

together. A brass elliptic ring G is fixed within F, and, at right-angles, two copper annular discs H, H¹ soldered to a copper sphere K. Between the discs H, H¹ and round the ring magnet is closely wound copper wire, the ends of which are soldered together. To the pivot B is fixed a cylindrical float L, and the whole bowl is filled with rape oil. The weights of the parts are so arranged that they are just on the point of floating, so that all works easily, and pressure on the pivots is avoided. The ring magnet turns the card, by means of the ring D, and carries with it the various compensating-devices, while the oil acts as an insulator for the conducting-wire.

6431. Key, J. T. May 13.

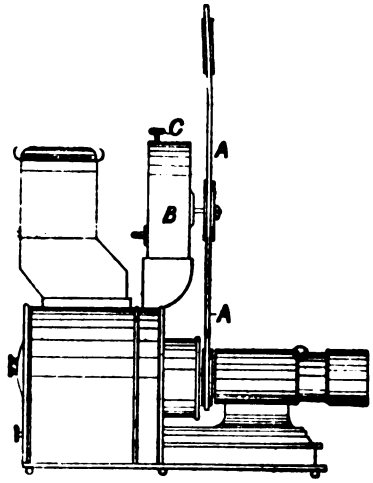

Magic-lunterns. — The views are mounted in apertures round the periphery of a circular disc A which is rotated by clockwork B, either continuously, or on pressing the knob C.

6642. Utting, M. W. May 18. *Drawings to Specification.*

Magic-lanterns.—The pictures &c. are carried by a disc which is revolved intermittently by clockwork &c.

6848. Ferry, J. B. May 21.

Optical instruments for circumscribing vision in viewing pictures &c. The case A of the instrument is similar to that of a stereoscope but with no lenses in the eye-holes B, B and open at the bottom. Within the case and pivoted thereto are two pairs of flaps C, C D, D, for limiting the horizontal vision, and another pair E, E for limiting the vertical vision. These flaps are worked from thumb-nuts F, G, H by means of cords, sliding bars, &c., so that the corresponding flaps are always

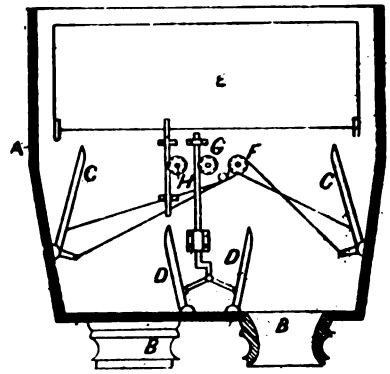

equally inclined to the optical axis. Movable eye-holes, not shown in the Figure, are also provided, which may be moved to or from the fixed holes B, B.

6936. Brown, J. May 24.

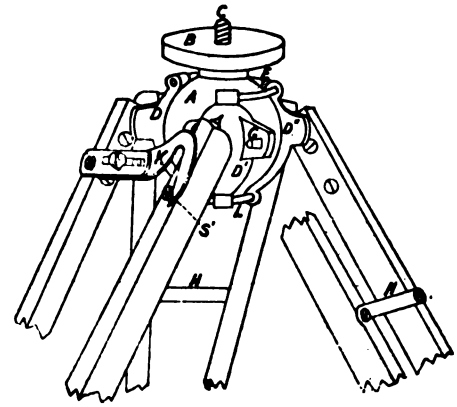

Tripod stands.—Relates to means for attaching a camera to the top of a stand. The ball A is connected to the baseboard of the camera by the projecting piece B and screw C. The ball A is supported by three cup pieces D, D¹, D¹¹, to which are fitted pegs G for the purpose of attaching the tripod legs. E is a spring for pressing the pieces against the ball. The divided ends of each leg are held on the pins by links H. One of these links K is adjustable and has an inclined hook fitting on the pin S¹, by pressing down K on which the whole apparatus is tightened. Other contrivances for tightening the cup pieces may be used.

7077. Gillie, J. W. May 26.

Compasses, magnetic, correcting errors of. Relates to course correctors for ships' compasses. A weighted spindle A is mounted in a small gimbal

Digitized by Google

ring B, and carries a fixed pointer C to show "ship's head." Above this is a second movable pointer L which may be set to the deviation with regard to the first on a dial D; the two pointers may then be clamped together. Below the dial D,

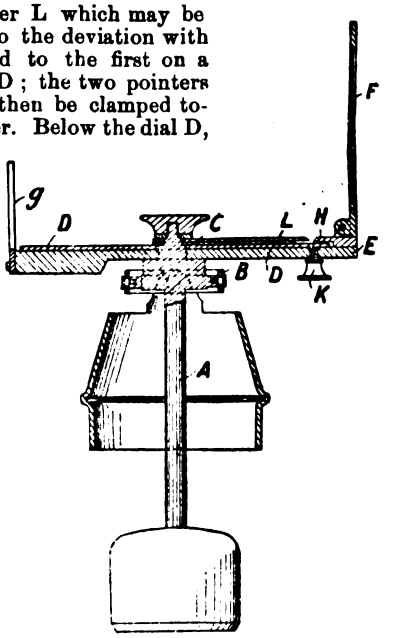

which is free to revolve on the spindle, is an adjustable bar E carrying sights F, *g* and a pointer H; the bar and dial may be clamped together by the thumb-screw K. To use the instrument, the deviation pointer is set; the bearing, according to the "Burdwood's tables," is then set off on the dial by the pointer H and the bar and dial clamped; after this the bar is revolved until the shadow of the wire in the taller sight falls on the slit in the shorter. The magnetic course can then at once be read off on the dial. The apparatus may be somewhat modified.

7289. Immisch, M. May 31.

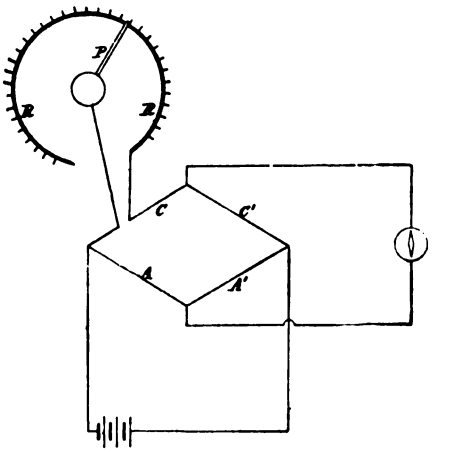

Thermometers for clinical and other purposes. The apparatus is based on the principle of the Wheatstone bridge, and depends on the varying resistances of substances when subjected to different temperatures. In the Figure, which is diagrammatic, A, A^1, C^1, C are the four arms of the bridge, of which A^1, C^1 are subjected to the temperature to be ascertained, and are composed respectively of metal and carbon. To C is attached a device for varying the resistance of this arm by means of the pointer P which moves over the ring R and, when equilibrium is established, shows the temperature on a graduated scale.

7344. Beard, R. R. June 1.

Magic-lanterns, slide-carriers for. The carrier A is grooved at the top with a wide channel which is divided into two by the lever B; at the bottom is a double groove (the dividing-ridge being cut away at the end), and channels for the three fingers C, D, E of a runner F shown in elevation and plan in Figs. 2 and 3. At the bottom of the carrier is an independent sliding rod G with projections H, K at either end. The slide is placed in the front upper and lower grooves of the carrier and pushed forward by the finger C until the finger D strikes the centering-lever L

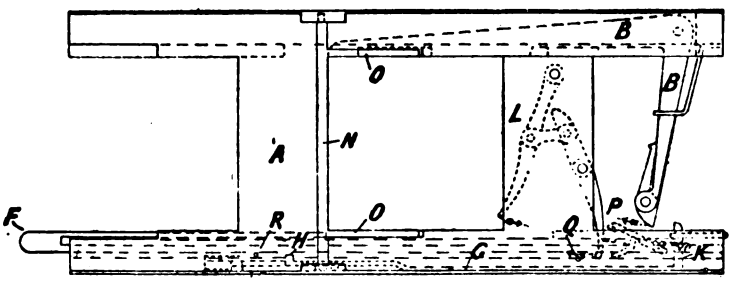

FIG 2.

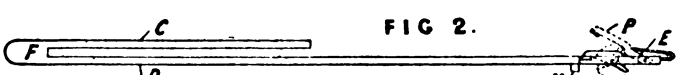

FIG. 3.

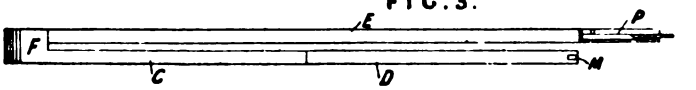

Digitized by Google

and grips it in position. On drawing back the runner the projection M on D engages with the projection H and draws back the rod G so as to bring the projection K against the lever B and lift the division of the upper channel; about the same time the projection H strikes a rod L connected with a crank on a spindle N having arms O, O; these being slightly rotated throw the slide to the back grooves of the carrier. On pushing forward the next slide the spring finger P on E is raised by the stop Q, and when the runner is again pulled back draws out the first slide, leaving the second in place. The spring finger is lowered again by the stop R.

7664. Blakey, J. June 8.

Levels; clinometers.—Upon one of two pivoted arms A, B, which may be set at any angle by means of a graduated arc C, is fixed a frame D carrying a dial on each side. The front dial is provided with a weighted pointer E as shown; to the other is pivoted at the edge a weighted pendant which actuates a separately-pivoted pointer; this arrangement is used for delicate readings, and the dial may be rotated independently of its frame to bring it into the required position. Sights may be fitted to the arms A, B when desired. In a modification for pocket use the dial box is in one with the pivot G.

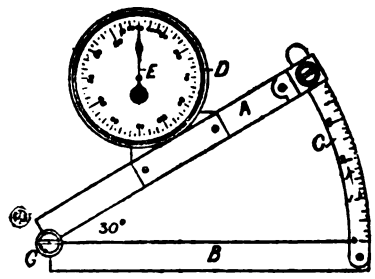

7752. Schmidt, W. June 9. *Drawings to Specification.*

Thermometers.—In the steam pipe of a specially-constructed steam generator a vessel is inserted and filled with some liquid, such as water, of which the pressure is indicated by a manometer. By these means the temperature of the passing steam is ascertained.

7820. Wood, J. J. June 11.

Sight-testing apparatus.—Relates to an apparatus for detecting defective vision in each eye separately, by means of which also the lenses intended for the correction thereof may be tried. The form of instrument employed for long-distance vision is shown. It consists of an upright A mounted adjustably upon a standard C and carrying two pairs of eye-pieces B and B¹, the upper pair for tall and the lower for short persons. Each eye-piece is provided with a shutter *a*, and the arrangement is such that by turning the thumb-screw *c* one eye-piece is closed and the other is simultaneously opened. This is effected by mounting upon the shaft *d* two barrels, one of which carries one shutter, while the other is toothed and gears with a segmental rack to which the second shutter is attached. The eye-pieces are provided with slots *k* into which the trial lenses are placed. The apparatus is fixed at a distance *x*, not less than fifteen feet, from the test types *i*. For reading distance the instrument contains only one pair of eye-pieces, the axes of which are inclined, and carries a support for the test type at the usual reading distance from the eye-pieces.

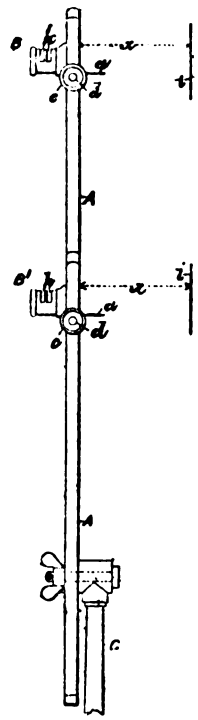

8076. Hughes, W. C. June 17.

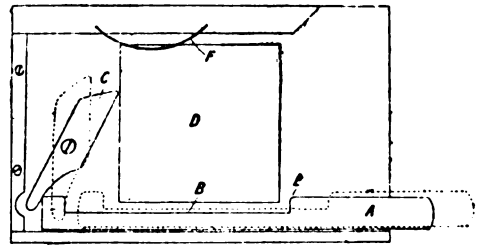

Magic-lanterns, slide-carriers for. At the bottom of the carrier is a runner A working in a slot and partly cut away at B. To the frame is pivoted a cam C, against which the runner strikes.

Digitized by Google

The picture D is thus gripped centrally between the cam and the edge E on the runner. A spring F is used to steady the slides.

8189. Dickman, G., [*Mabie, Todd, & Bard*]. June 21.

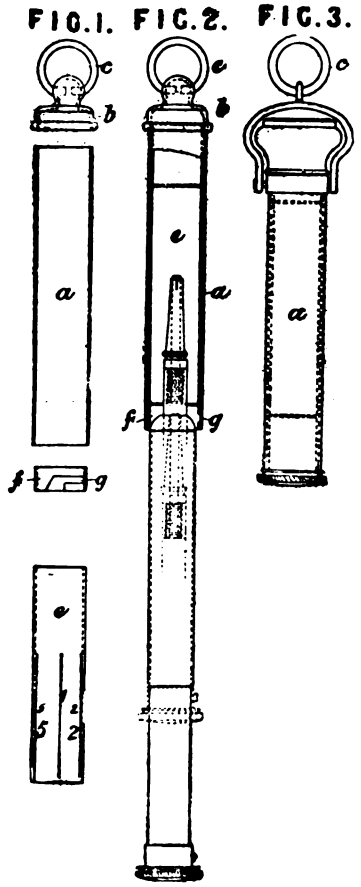

Thermometers, cases for. The invention is described with reference to pencil-case holders but is applicable also to thermometers. The holder is arranged to be attached to the person by means of a watch guard or otherwise, and to receive a telescopic pencil case. The tube *a* carries a cap *b* with suspension ring *c*; within *a* a tube *e* fits loosely and is kept within by the short tube *f*, which has a bayonet slot *g*. The pencil case is arranged to fit the tube *e*, and is locked in position by a stud working in the slot *g*; the end of the case closes the open end of the holder and thus renders it dust-proof. In a modified form, the suspension ring is placed at the open end as shown in Fig. 3.

8230. Harris, R. E. June 22.

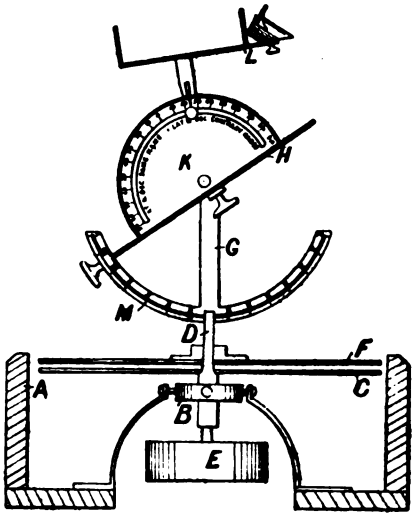

Compasses, magnetic, determining errors of. Within an octagonal box A is mounted, on a collar B swinging in gimbals, a base-plate C. Through the collar passes the screwed spindle D carrying an adjustable balancing weight E, and upon the base-plate is the horizon plate F revolving on the spindle and graduated with compass points and degrees. In a fork support G is pivoted the hour circle H, suitably graduated in hours and minutes on both sides, but in opposite senses, for use in the northern and southern hemispheres. On the circle H works a pointer to which the semicircle K is attached; a radial arm is pivoted to the centre of this semicircle and carries a sighting-bar L with special triangular sighting-vanes and reflector. To use the instrument, the hour circle H is set to the latitude on the arc M, the radial arm to the declination, and the pointer to the apparent time on the hour circle; the sun, or other body which is to be observed, is then sighted by turning the horizon plate round. The reading on the horizon plate in a line with the ship's head now gives the "true course." Where tables are used the instrument is modified and simplified.

8334. Lilley, G. C. June 24.

Compasses, magnetic, suspending or supporting. The pivot *b* of the gimbal ring B rests in a bearing C, with wings *c*, *c*, which slide on the guide-rods *d*, *d*. These rods are fixed on the piece D, attached to the band-ring E, and are connected at the top by a cross-piece *g*, held by screws. Springs F, F, coiled round the rods *d*, *d*, support the sliding bearing. The band ring E is fixed to the binnacle by india-rubber strips *h*, *h*.

(*For Drawing see next page.*)

Digitized by Google

8334.

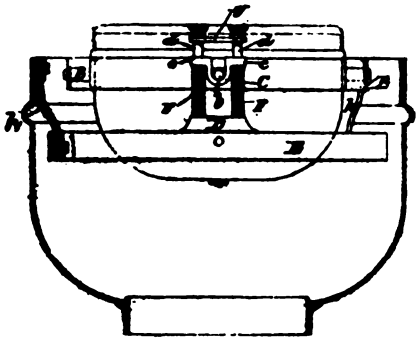

8748. Farquharson, W. July 3.

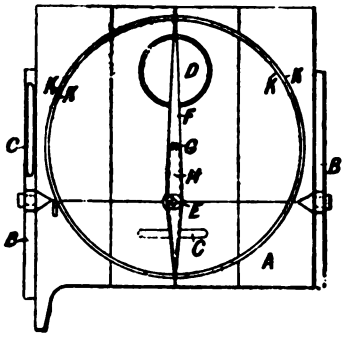

Surveying - instruments. — Two specially-constructed instruments, the "cross-staff" and the "distancer," are employed, a plan of the latter being shown; each instrument is mounted on a tripod in the usual manner of levels. The cross-staff is adapted to take sights accurately at right-angles, the distant object being first sighted and a line then laid off at right-angles, and of any desired length. At the end of this line is placed the "distancer," which consists of a truly-flat square table A mounted on trunnions in a frame B, B, the upper edges of which are true planes. Levels C, C are provided for levelling the various parts, and a compass D is let into the table. Upon a spindle E passing through the table at the centre of the line joining the trunnions is mounted a "sighting" hand F, and upon a central spindle G is fixed an index-finger H which runs over the graduated circles K, K, K. The two spindles E, G are geared together so that the finger H magnifies the motion of the hand F, which can be set in any direction required by milled heads on a wormed spindle beneath the table. The table may be set at any required inclination to the frame edges B, B by means of a toothed segment gearing with a worm on a spindle ending in a milled head. The "distancer" is adjusted by turning the sighting-hand to sight along the line to the "cross-staff," and so bringing the line joining the trunnions to coincide with it. The sighting-hand is then turned to the distant object, and the circles K, K are so graduated that the finger H points to the multiple the distance is of the base line. The height of the distant object above the plane of observation is determined by proportion when the distance is known. For this purpose the inside edges of vertical bars on the frame B, B have scales of inches marked thereon at a specified distances (say 4 inches) from the pivoting axis of the table. By observing the division cut by the inclined table when sighting the distant object the proportion may be obtained.

8866. Crossley, E. July 7.

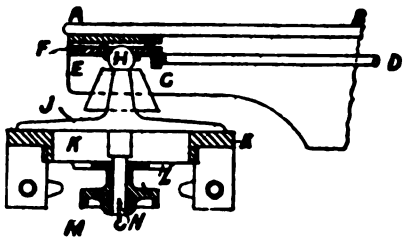

Tripod stands for measuring-rods. Designed for measuring distances over uneven ground. A metal rod C, D is provided at each end with caps F which fit spherical heads H mounted on tripod stands. The tripod top is fitted with a ring K, and the spherical head H is attached to a plate J resting upon the ring. The plate K may be clamped in any position by means of a three-rayed star L and milled nut M on a stem N. A plummet is hung from the hook at the end of the stem. In use, one tripod is placed with its plumb-line accurately over the starting point, and a second tripod at a distance measured by a chain so as to be roughly equal to the length of the rod. The plate J of the second tripod is then adjusted till the caps of the rod fit both spheres. To compare the rod with a standard it is replaced by a tube with one end telescopic, supported in a case resting upon the spheres. The tube is extended till both ends touch the spheres, and its length is measured by a scale and vernier.

8920. Gordon, J., and **Lowdon, E. J. B.** July 8.

Anemometers.—A pair of bellows A has a single inlet pipe B open at its other end, and the upper plate C, which is free to move up and down, is controlled by a spring D; the upper plate is also connected to a cord E passing round the spindle of the index-finger F, and to a lever G pivoted at H and carrying a pencil at its opposite end to

Digitized by Google

trace a record on the drum K rotated by clock-work. Various slight modifications in the arrangement of the working parts may be introduced.

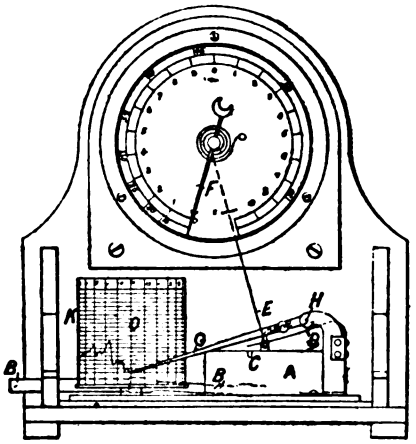

8973. Walford, M. L. July 9.

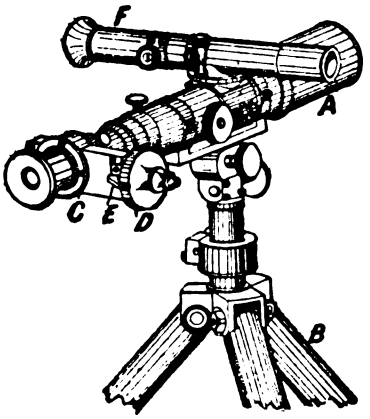

Range-finders.—A telescope A is mounted on a tripod stand B, and the object of which the distance is to be determined is covered by a vertical line traced on a glass plate C, which can be moved in front of the eye-piece by a screw with graduated head D and fixed pointer E. A second telescope F is fixed above the first and at right-angles to it for purposes of adjustment. After making the observation the telescopes are removed to a second tripod at the opposite end of a base line, and a sighting-device placed on the first tripod; this consists preferably of two discs placed at either end of a rod, which is set accurately in line with the original position of the telescope F. One of the discs is slotted vertically and centrally, and the other has a clearly-marked vertical diameter; the telescope A can thus be adjusted exactly parallel to its former position by observing through the telescope F when the vertical diameter in one disc can be seen through the slot in the other. The line on the glass plate C is next made to again cover the observed object, by turning the screw head D, and the graduation opposite the fixed pointer noted. The base line is sometimes measured by a tape, but where this is inconvenient a graduated rod is placed or held at the other end of the base, the length of which is then determined by the displacement of the head D necessary to make the line on the plate C traverse a known length of the rod. The graduations on the screw head are arranged so that the product of the base and the observed graduation gives the range. Details of the apparatus and the method of using it may be slightly modified.

8984. Claud-Mantle, J. G. July 9.

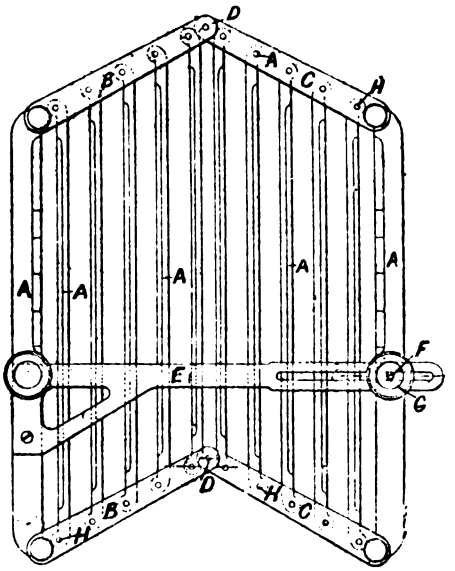

Parallel rulers; scales.—Relates to a "gridiron "ruler" and scale for laying out ordinates and obtaining results from indicator and other diagrams. The ruler is formed of parallel bars A jointed to two pairs of parallel links B, C hinged together at D. A cross-bar E is fastened to one of the two extreme bars, and takes over a screw F on the other so that, by a milled nut G, they may be held at different distances apart to suit diagrams of various lengths. To alter the relative distances between the intermediate bars their joint pins H are put into other holes of the links B, C, or they may slide in slots. The sum of the ordinates is marked off on paper and read by graduations drawn to a scale which is that of the diagram multiplied by the number of ordinates, thus saving division to find the mean pressure.

Digitized by Google

9244. Yeates, S. M. July 16.

Levels; telescopes. —The bubble case and ends of a "Gravatt's level" are made all in one piece, as also are the telescope tube, stage, and centre. The cross-hairs are cemented between two pieces of glass or the plane surfaces of two lenses. Instead of the cross-hairs a steel edge A may be used.

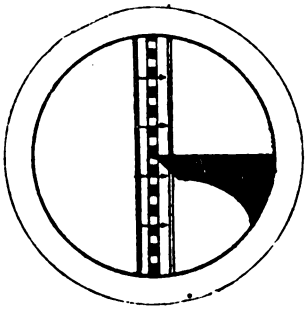

9383. Hughes, W. C. July 20.

Magic-lanterns. — The picture-frame A rotates or reciprocates on a spindle carrying at its end a slotted disc B into which enters a detent C with wings D, D. When the view is to be changed this detent is depressed, and is thus withdrawn from the slot in the disc, while the wings strike against the arms F, F on the spring catches G, G, freeing the pin H and allowing the frame to be rotated. The detent also strikes one end of the lever K, the other being connected by toggles L, L with a pair of shutters M, M for shutting off the light during the change.

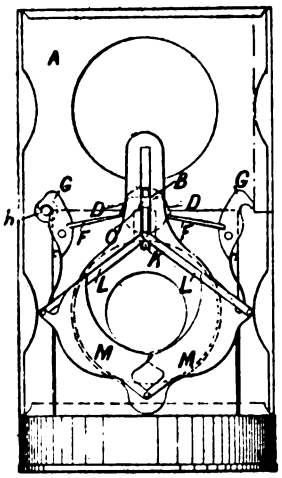

9385. Ward, P. July 20.

Thermometers. — Consists in the use of tetrachloride of carbon, coloured by dissolved iodine, as the expansible liquid.

9469. Hughes, W. C. July 21.

Magic-lanterns. — The apparatus is intended to produce the effect of "rolling up" the pictures one after the other. A double sliding shutter made in two parts A, A, hinged together so as to adapt it to the convergence of the lanterns, alternately shuts off the light from the two lanterns, and is so arranged that as one picture is obscured from below, a corresponding portion of the other picture is exposed. The shutters work in pockets C, C to ensure steadiness, and screws D, D are provided engaging with slots in a back plate to allow of

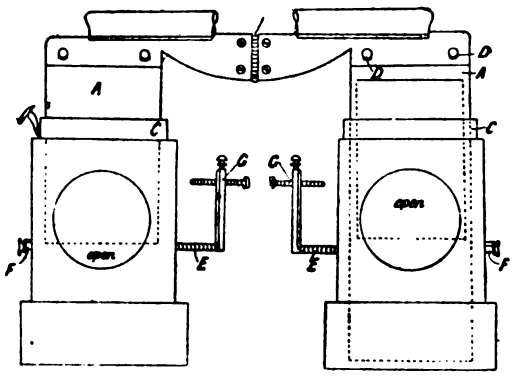

horizontal adjustment. Two rods E, E with square heads at F, F run across the slide-carriers and have at their ends adjustable stopping-devices G, G for accurately centering the slides. When panoramic views are used, the rods are drawn back so that the square heads no longer retain them in position, and the adjusting-devices may then be turned out of the way.

9798. Defries, H. July 29.

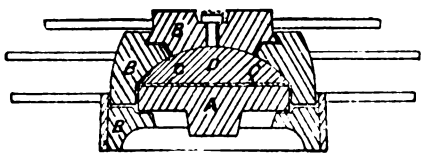

Lenses.—A white or coloured plate of glass is incorporated with the flint glass forming the body of the lens, which may be white or similarly coloured. The ordinary grinding and polishing are dispensed with. In case a coloured plate is incorporated with a white body, the whole is rendered coloured by this process, the colour being uniform at whatever angle the lens is viewed. The plate is first cut to the required size and placed in a receiver, where it is heated to a plastic condition. It is then dropped upon the plug A in a mould B made in three sections and the fluid metal intended to form the body of the lens poured upon it; on pressing with a plunger the plate C and body D become incorporated. The method of manufacture may be varied, and in some cases the metal dropped in may form a flange around the plate.

Digitized by Google

9844. Evelyn, G. P. July 30.

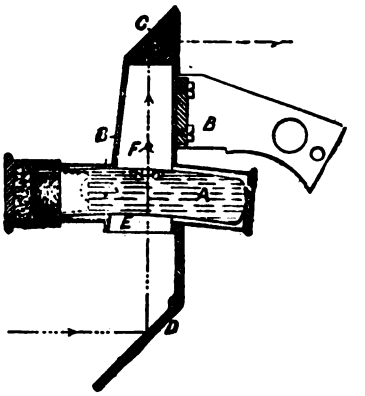

Sextants; horizons, artificial.—A short spirit level A is fitted in a frame B attached to the sextant, and the image of the bubble is directed to the telescope by the reflecting-prism C. The telescope is fitted with half-lenses through which the distant object is viewed after reflection at the mirrors in the ordinary manner. To render the image of the bubble sufficiently clear, a reflector D is fixed below the opening E in the frame B, and steadiness is obtained by curving the tube A more than usual. A cross-line F is placed above the level for exact adjustment.

9936. Mackenzie, H. L. Aug. 3.

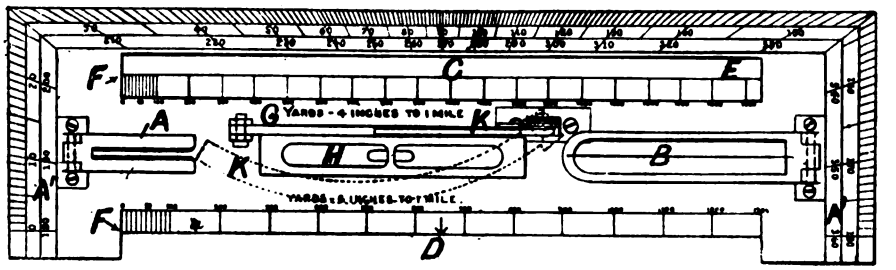

Surveying-instruments.—Relates to a protractor carrying sights and a clinometer for use in preparing sketch maps for military and other purposes. A slit sight A and a hair sight B are pivoted at opposite ends of the front side, and there are two bevelled edges C, D, marked with scale of distances. The edge C forms one side of a slot E. The instrument is turned on the paper about either of the corners F, over points representing the observing-station, and lines are drawn along the bevelled edges in the directions sighted, the intersections giving the positions of places. The clinometer consists of a pivoted arm G carrying a spirit level H, and ending in an eye which travels over a graduated arc K. The arc is hinged to a swivel, so that when not in use it can be put down and turned under the level as shown in dotted lines. When taking angular elevations the protractor is inverted, and its back used for sighting, while the arm G is held horizontal. The back of the protractor is marked with a diagonal scale of inches, links, and chains, and also with a scale of horizontal equivalents for angles subtended by a length of ten feet.

9970. Marsden, S. Aug. 4.

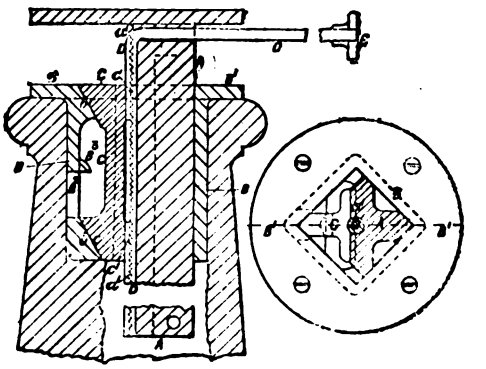

Stands for "mathematical and other instruments." Relates to adjustments for music stools, stands, &c., and is described as applied to a music stool. The stem A slides in a socket B fixed by a flange B^1 to the body of the stool. Sliding on inclined surfaces *b*, *b* in the socket is a wedge C which may have serrations c^1, c^1 engaging serrations a^1, a^1 in the stem, or both may be plain, in which case the stem may be tapered. By pushing the end E of a rod D, passing down a groove in and fixed to A, the wedge C may be slightly raised, allowing the top of the stool &c. to be adjusted in height. The slot B^2 and the projection B^3 limits the motion of the wedge. A pad or spring fitted

Digitized by Google

to the wedge prevents clicking when the stem slides. Rollers may be fitted to the wedge at *c*, *c*, or the wedge may be hinged by two links like a parallel ruler. The Provisional Specification describes an arrangement in which a lever is used to operate the wedge C.

10,068. Laidler, W. H., and **Laidler, T.** Aug. 6.

Angle-measuring instruments.—Relates to gauges for measuring sectors. Within the body of the instrument is a groove in which slides the piece A, forming an arc of a circle, and kept in place by a fixed bar B, one corner C of which coincides with the centre of the arc. To A is attached the right-angled piece D carrying a pointer at one of its ends, and arranged so that the corresponding edge passes always through the centre of the arc. By moving the arc the jaws E, F open and can be made to grip the circular sector to be gauged, the angle being then read off on the scale shown, and also the number of these sectors contained in a complete circle. Scales of diameters and circumferences are marked on the edges of the jaws.

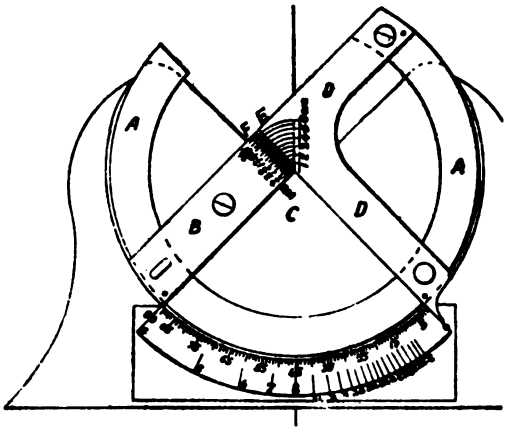

10,411. Barber, F., [*Prowse, G. R.*]. Aug. 14.

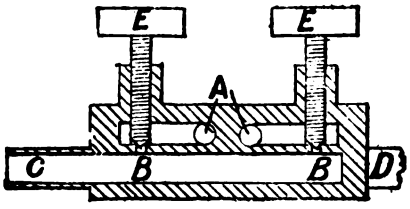

Magic-lanterns, dissolving-apparatus for. Consists in an arrangement for regulating the pressure of the gases before they reach the dissolving-cock. The hydrogen is conveyed to the burners by two tubes A supplied through holes B in the main C. The oxygen is similarly conveyed from a main D by two tubes parallel to the tubes A. The four tubes lead through a plug cock having two pairs of ways at right-angles. The pressure is regulated by conical-ended screws E over the holes B. In order to keep both burners alight a small uninterrupted stream passes from one hydrogen tube to the other through a passage controlled by a fifth screw.

10,816. White, J. H. Aug. 24.

Thermometers. — In an alarm thermometer, the terminals of the alarm are both placed at the top of the bore to prevent the corrosion that occurs in the one usually inserted in the mercury of the bulb. In the arrangement shown the bore of the thermometer A is spread out at the top into a conical or other chamber B, the outside of which is formed into a lip C. The top of this chamber is plugged by a cork or other material through which the terminals D, D of an electric alarm are led, and the whole is secured by a cap of cement E. When the mercury rises into the chamber B the circuit is completed for the alarm.

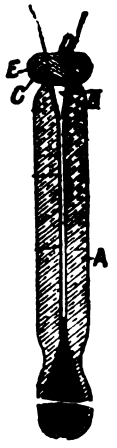

11,041. Moennich, P. Aug. 30.

Thermometers; barometers; hygrometers; anemometers. — Relates to means for observing from, or transmitting to, a distance indications or measurements taken by these instruments. At the station where the instrument is located there is a pair of coils B, C, the latter being turned within the former (which is fixed) by the movements of the instrument. At the reading station is an exactly-similar pair of coils E, F. The fixed coils B and E are in the secondary circuit of an induction coil G. The coils C and F are put in circuit with a telephone H, so that the currents induced in them by the coils B and E

Digitized by Google

flow in opposite directions. When the coil F is turned by hand till no sound is heard in the telephone it is in the same relative position to E as C is to B, and the pointer gives the reading on a graduated arc.

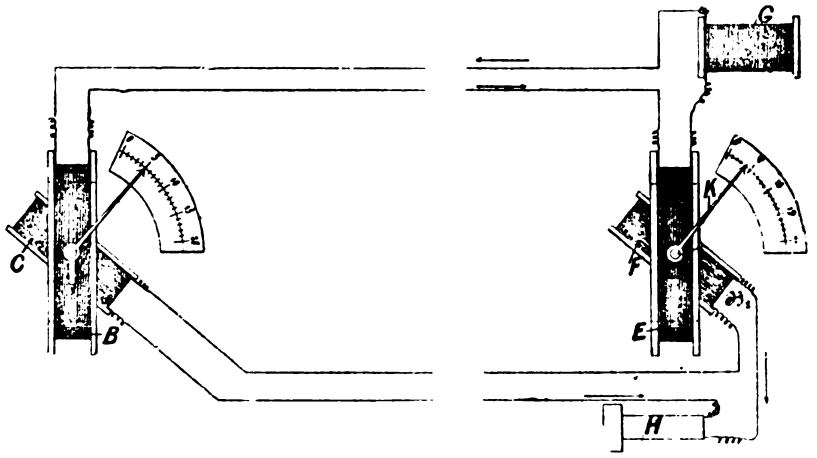

11,175. Riley, W. J. Sept. 2.

Tripod and like stands.—The legs E, which may fold back along the standard, and which may be three or more in number, are jointed to a collar D fixed near the lower extremity of the telescopic standard A, B, and are held extended by catches F, G hinged either to the legs or to the bottom of the standard.

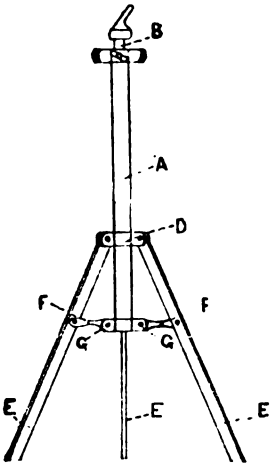

11,179. Leighton, J. T. Sept. 2.

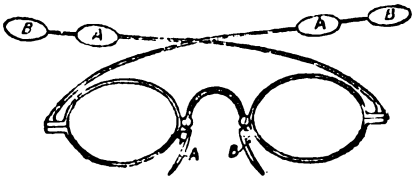

Spectacles.—Discs A, B of dissimilar metals, which in contact with the skin produce weak electric currents, are attached to the wings and bridge. The bridge is wrapped with insulated wire, and becomes magnetized by the current from its discs.

11,220. Falter, G., and Falter, J. Sept. 3.

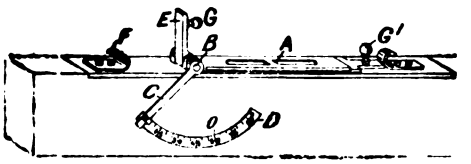

Levels; clinometers.—Relates to an improved levelling-instrument and clinometer. The case A carrying the tube is pivoted at B, and has a finger C for indicating inclinations on a graduated arc D. By lodging the end of an arm E under a spring F the tube is held at right-angles to the block for plumbing. The level is set before use by screws G.

11,631. Courlander, L. Sept. 13.

Sight-testing apparatus.—Lenses A are arranged in order of focal length on endless bands within two cases B. They are brought in succession to the sight-apertures C, through which is viewed the test type carried by a sliding holder on a graduated bar behind. The cases are recessed slightly at D to accommodate the nose and rock a little on their stand E in order that the lenses may be collimated with the pupils by a screw F. The distance between the pupils is shown by

Digitized by Google

graduations G. The endless bands are advanced by turning a spindle H, the motion of which is transmitted to the lower pulleys of the band by mitre-wheels I. The spindle is divided at the

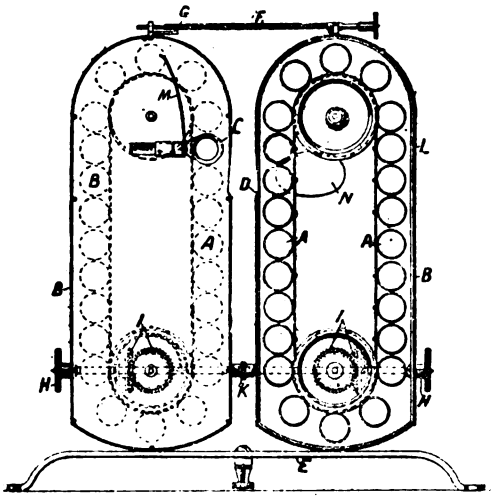

centre, the two parts being connected by a loose joint K to allow play of the cases and independent use of each band. The power of any lens is marked on the rim of the one opposite, and can be read off at a side aperture L. At the eye apertures are a pair of pivoted temple gauges M. The apertures may be closed by scutcheons N, and two of the lens-carrying rings may be used to receive removable lenses for testing astigmatism.

11,802. Harling, W. H. Sept. 16.

Mathematical drawing-instruments. — Relates to socket-joints for securing pencil or pen legs to compasses, ruling-pens in their handles, &c. The Figure shows the application to a bow pen. A taper shank A passes into a taper or cylindrical socket B, and is made fast by a slight pressure or twist.

12,125. Bromley, J. Sept. 24.

Magic-lantern apparatus.—In connection with roundabouts of special construction, panoramic effects are exhibited at the centre of the apparatus. To revolve the panoramic screen D, the axle R is continued by the shaft H^1, and by means of gearing D^1, C^1, M^1, N^1, and P^1, the wheel R^1, loose on a bearing F^1, is rotated, and thereby the screen D^1, which is attached thereto by the rod O^1. On the screen the picture is thrown by a lantern S,

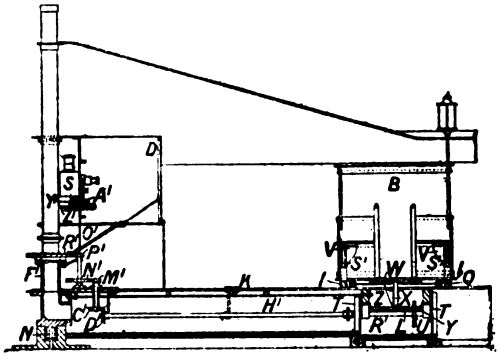

which picture may be varied, if required, by means of friction-wheels Z^1 and Y^1 rotating the circular glass plate A^1 on which the series of pictures is painted.

12,148. Pearce, E. H., and **Besson, H.** Sept. 24.

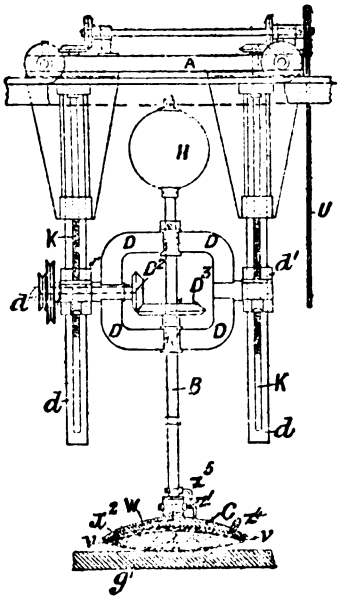

Lenses for spectacles, telescopes, &c. Relates to surfacing or polishing apparatus, being improvements on apparatus described in Specifications No. 7461, A.D. 1884, and No. 8310, A.D. 1885. In the use of chucks, the action of which depends upon the presence of a vacuum behind the article, it is found that delicate articles become distorted. To obviate this a backing of water is introduced

Digitized by Google

between the chuck and the article. For bevelling &c. large plates a series of such chucks may be inserted in holes in the holder, which is faced with rubber strips, is adjustable as to inclination, and receives a reciprocating motion. Smaller plates are bevelled, several at a time, upon chucks movable in a large holder, so that one chucking suffices for bevelling all the edges. For grinding small lenses, the chucks are formed on the surface of a hemispherical rotating head above which rotates a cup-shaped grinder. This apparatus may be modified in several ways. The Figure shows an apparatus for grinding larger lenses. Mounted in bearings d^1, d^1 carried by guide-bars d, d descending from the overhead carriage A is a frame D, through which passes the hollow spindle B of the chuck C. This is provided with a rubber facing ring v, a cock z^4 for the water W, and a passage x^3 connecting with the vacuum chamber H. Cocks z^1 and z^5 are fitted to the top of the chuck, and the bottom of the hollow spindle respectively, which are connected by a screw coupling. The chucks may therefore be changed at will. It is rotated by the pulleys d^{111} and bevel gear D^2, D^3, and is swung to and fro by a rope. The height of the bearings above the grinder g, and hence the radius of curvature of the lens, is adjusted by the screws K, K actuated by the rope U. In a modified form the hollow spindle is mounted on a frame travelling upon curved guides.

12,176. Lake, H. H., [*Ripamonti, L.*, and *Drivet, H.*]. Sept. 24.

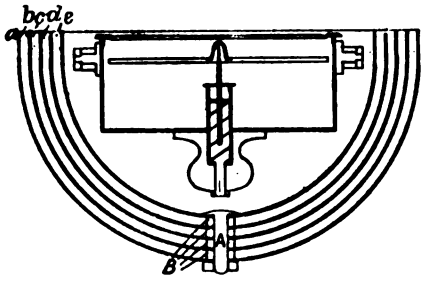

Compasses, magnetic.—The object of the invention is to protect the compass from the disturbing influence of adjacent iron; for this purpose the box is gimballed in the midst of one or more plates or layers of soft iron, steel, &c. In the Figure, the plates a, b, c, d, e take the form of hemispherical cups held together by a bolt A and distancing-washers B; the details of construction, however, may be varied.

12,265. Munro, F. W. Sept. 27.

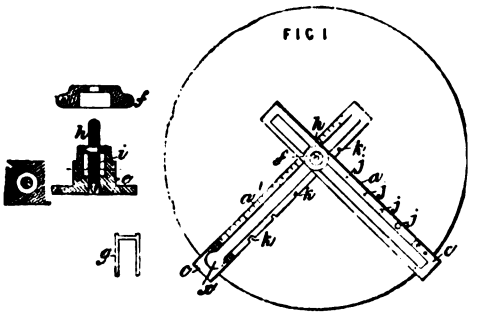

Squares.—Relates to an appliance for marking and setting-out work, which may also be used as a T-square or set-square. The appliance consists of two slotted arms a, a^1 which may be provided with wire and plate gauges j, k. These arms have a square bodied piece e passing through them by which they can be clamped either parallel or at right-angles to one another by means of the nut f, the piece e being capable of rotation in the end x of one of the slotted arms. A scriber or pin h, held in position by the spring i, passes through the centre of the piece e and is used for marking the work. Wings g, mounted on a central pin or attached by a rule joint &c., are fixed at one of the ends of each bar, the wings being kept parallel to or at right-angles to the bars by flat springs c. For centering, as shown in Fig. 1, the wing pieces are turned at right-angles to the arms, which are fixed so that the scriber will mark or describe a small circle round the centre of the object as the wings are moved along the periphery. The appliance may be used also as a T or a set-square.

12,404. Christie, W. H. M. Sept. 30.

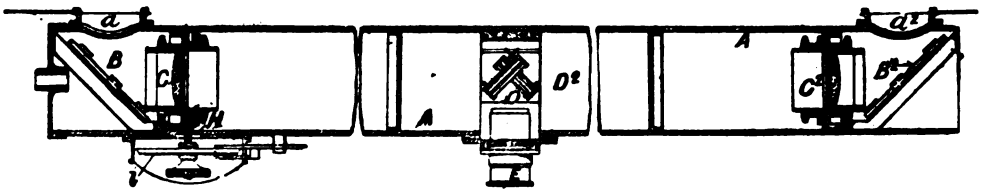

Telemeters.—At both ends of a tube A are fixed reflectors B, B^2 which receive pencils of light from the object, the distance of which is to be determined through the apertures a, a^2. The reflectors are

Digitized by Google

inclined at 45° to the axis of the tube, and so direct the image of the object through the object glasses C, C^2 to the mirrors D, D^2 also inclined at a similar angle so as to turn the rays of light into the eye-piece E. Each object glass may be made adjustable longitudinally in the tube, but C is also adjustable transversely by means of a micrometer screw H with graduated disc *i*. Two images of the distant object are seen in the eye-piece E, the distance between them being greater the nearer the object. The lens C is moved by the micrometer screw until the images coincide or come into some definite relative position, when the range is read off on the graduated disc *i*. In detail the invention may be somewhat varied.

12,489. Hoffmann, C. G. Oct. 1.

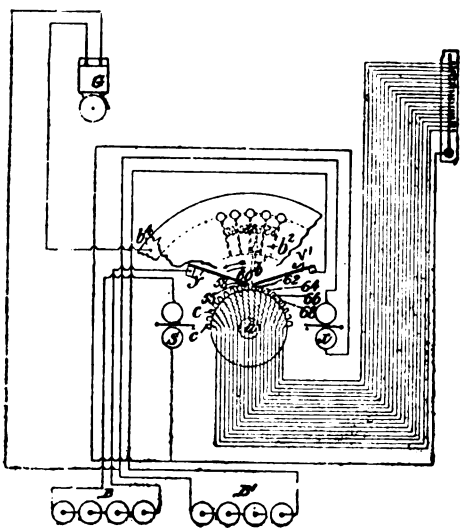

Thermometers.—Relates to means for enabling the rise and fall of temperature at any place to be observed at a distant locality. The Figure is a diagrammatic view of a portion of the apparatus. A series of wires are melted into the tube of the thermometer and are in metallic connection with a corresponding series of insulated metal bands round a cylinder *a*, the bands being provided with teeth *c*, *c* arranged in a half spiral and coming in contact one at a time with contact-plates *y*, y^1 respectively. The cylinder *a* can be rotated in either direction by a spring barrel operating through epicyclic bevel gear, but is normally held stationary by two locking-devices controlled by the electromagnets *s* and *x* connected to the batteries B, B^1, the first locking-device being released when the circuit of *s* (which is normally closed) is broken, and the other when the circuit of *x* is closed. On the axis of the cylinder is fixed the indicating-hand *b*. The operation is as follows :—Supposing the temperature to be 58°, the circuit is closed for *s* through the mercury column of the thermometer, but broken for *x*. If now the temperature rise to 60° the circuit of *x* is completed, one of the locking-devices released, and the cylinder revolves in the direction of the feathered arrow ; the tooth marked 60 thus moves into contact with the plate *y*, the tooth 62 with the plate y^1, and the current of *x* is again broken ; the hand *b* moves with the axis of the cylinder from 58 to 60 simultaneously. In case the temperature falls, the circuit for *s* is broken, the other locking-device released, and a reverse movement of the cylinder and index-hand takes place. Adjustable contact-pieces may be fixed to the scale plate of the instrument connecting insulated plates b^3 at each desired degree with a plate b^4, and thence with an alarm bell G. A light spring on the index-hand presses on the plates b^3 and contact is thus made when the hand reaches the degrees at which the adjustable contact-pieces have been fixed. Maxima and minima recording-fingers are also provided, and a means of tracing a permanent record of the movements of mercury.

12,848. Joly, J. Oct. 9.

Sounding-apparatus.—The sinker is not attached to a line, but is allowed to descend freely, and is arranged to explode on touching the bottom. The depth is then estimated by the length of time elapsing between discharging the sinker and hearing the explosion. The Figure shows one form of the sinker. The part A is filled with some explosive which is ignited by a fine platinum wire B becoming incandescent under the influence of an electric circuit, closed by the pushing in of the button C on the apparatus striking the bottom. The battery is formed of the two elements D, E, the sea-water acting as the liquid. In other forms the concussion explodes a detonating cap, breaks a small vessel of sulphuric acid, or acts otherwise to produce the explosion.

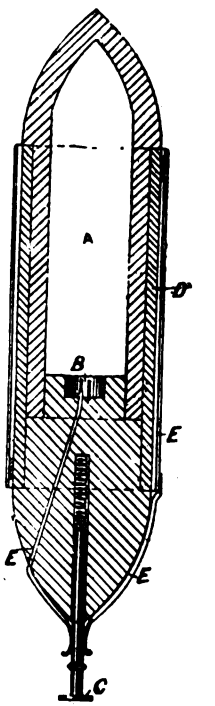

Digitized by Google

12,867. Lovibond, J. W. Oct. 9.

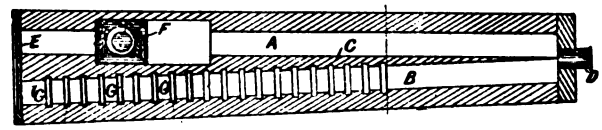

Colours, testing.—Relates to testing the intensity of the colour of transparent bodies. The apparatus consists of two tubes A, B separated by a wedge-shaped partition C so that they are slightly inclined to one another. An eye-piece D is fitted to command a view of both tubes, the other ends of which are open, or merely covered by a screen of ground-glass E so as to freely admit light. In one tube is placed a block of the substance to be tested, a definite thickness of course being chosen, generally one inch; in the case of liquids a containing-vessel of white glass is used. Into slots in the other tube a series of standard intensity of colour glasses G, G, G are placed until the required shade is obtained as viewed through the eye-piece.

12,965. Turner, J. Oct. 12.

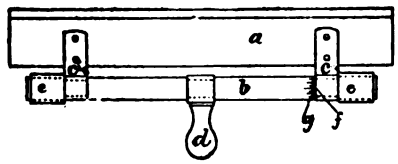

Parallel rulers.—A straight-edge *a* is connected with a roller *b* by straps *c*, *c*, on one of which a pointer *f* is formed, moving over a scale *g* on the ruler, to show the distance travelled. A handle *d* may be journalled on the roller, and collars of india-rubber or other similar substance *e*, *e* used to prevent slipping. The straight edges may be graduated.

13,003. Torre, F. D. Oct. 12.

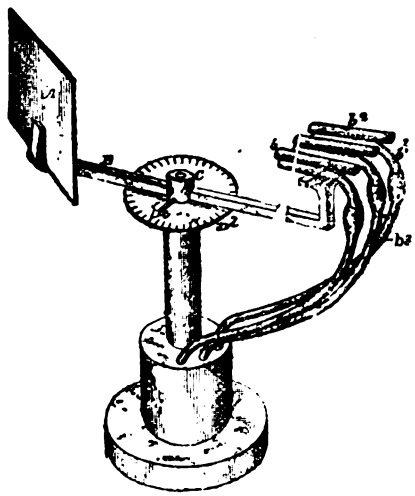

Sounds, locating. — Relates to a method of indicating, on a ship, the proximity of icebergs or other obstructions to navigation. The echo of a sound produced on board the ship, or a sound direct from the obstruction, is directed by a reflector such as A into hearing-tubes *b*. The direction from which the echo is received and the time between the sound and reception of the echo indicate the position of the obstacle. In the apparatus shown the reflector A is placed at an angle of 45° on a bar B attached to a spindle C carrying a pointer *c* working over a scale D^2. The sound from the reflector A is received in tubes *b* or b^2, which point to the centre of the reflector, and may be connected by hearing-tubes such as b^2 with any desired part of the vessel. The pointer *c* and tube *b* in which the echo is heard indicate the position of the obstacle. The bar *b* may be provided with a second reflector placed at an angle with the first to direct the echo back in the direction from which it came to hearing-tubes placed beneath a hood. A V-shaped or prismatic front may be placed on the deckhouse of the vessel to deflect sounds into hearing-tubes connected with any suitable portion of the vessel, and other modifications are described. To facilitate the navigation of shallow coasts, inland waters, &c., sound reflectors or combinations of reflectors are placed at suitable points on the shore or banks, and their positions marked on a chart carried by the vessel. The reflectors are so arranged that the echoes produced distinguish the reflectors from each other, and the position of a vessel is ascertained by producing a sound on the vessel and noting the time of reception of the echo and its direction.

13,436. Harrington, J. W. Oct. 21.

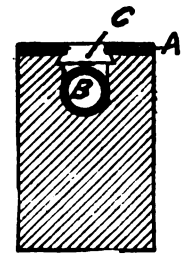

Levels. — Spirit levels are fitted with a protecting-plate C for the spirit tube B. This plate slides in grooves beneath the face-plate A.

Digitized by Google

13,581. Clark, A. M., [*Briggs, D. W.*]. Oct. 23.

Mathematical drawing-instruments.—Relates to apparatus for ruling section lines, co-ordinate lines, parallel curves, or the like. A set-square A and straight-edge B are used for ruling parallel straight lines, a ridged or toothed surface being formed on the latter and a similar ridged or toothed surface C on a part D rigidly attached to the former by a piece F. By this arrangement the distance between the adjacent lines can be made equal to, or any required multiple of, the distance between consecutive teeth, or by using the hypotenuse of the set-square as ruling-edge (which may have any angle with the sides) this distance may be any required submultiple. For parallel curves, the ruling-edge is made of any desired contour. The same principle can be applied to T-squares and drawing-boards. The details of the invention admit of modification; thus, the teeth may be formed on the edges of the square and straight-edge, and the toothed parts may be fixed adjustably.

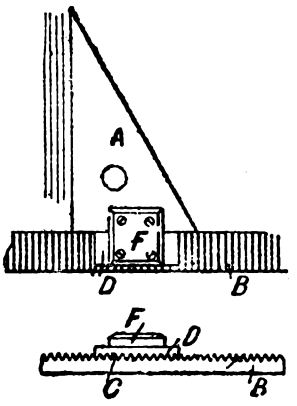

13,620. Dollond, A. W. Oct. 25.

Tripod stands for cameras &c. The sliding part *a* of a leg is of the special section shown at A and slides through a corresponding hole in the block B or *b*, *b* connected to the other part *c*, *c* of a leg. On partially rotating the part *a* it is jammed or released.

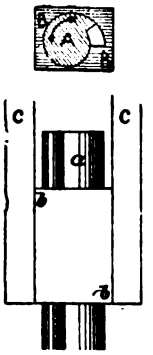

14,204. Aldous, H. G. Nov. 4.

Thermometers.—Relates specially to thermometers for taking the temperature of brewers' mash, fluids, and grain. The bulb H is placed in a cylindrical receiver E, the whole being attached to a strong handle. At the base of the receiver is a seating *d* for a clack valve *c* sliding on the guide-bar *b* attached to a cross-bar *a*. When inserted in the mass to be tested some of this mass is forced through the valve, which closes on withdrawal. The temperature of the thermometer is thus maintained until it can be observed, while the bulb of the thermometer is protected from injury.

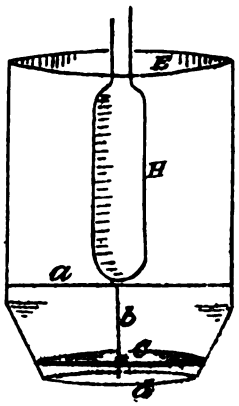

14,523. Thompson, W. P., [*Culbertson, H.*]. Nov. 10.

Sight-testing apparatus.—Within a fixed stand A is mounted a revolving holder B for a (preferably double) prism C adjusted accurately so that the line of sight passes through the median line. At a definite distance is placed a screen upon which is painted a small circle to act as the object. The size of this circle and its distance are so arranged that to normal eyes the two images produced appear to touch one another, but with long or short sight these images overlap or are separated. Corrective lenses are fitted into the holder D. To determine astigmatism the prism holder is revolved by the handle E, which acts as an index on a scale; to normal sight the images move round one another, touching throughout; but where astigmatism exists they overlap or separate in certain positions.

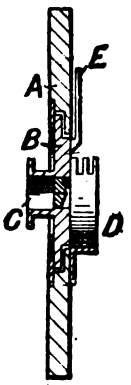

14,548. Dessendier, J. B. Nov. 10.

Photometers and actinometers for use in photography. The actinic power of the light is estimated by the rapidity with which a mixture of hydrogen and chlorine combine under its influence. For this purpose hydrochloric acid is electrically decomposed in the bottle A when the circuit of the battery B is closed, and the component gases led to the larger leg of a U-tube C when the cock D is opened by the closing of one of the circuits of the battery B^1. The U-tube is filled with liquid up to the zero point (line *x y*) and blackened below this point; the longer leg can be exhausted of air by a bellows E, and a sliding cover F works over this leg and is connected, by a cord passing round the pulley G,

Digitized by Google

with a float H on the liquid in the other leg. The pulley carries an index-hand K moving over a scale L and completing circuits of the magnets M and M¹ respectively at either extreme position; these magnets M and M¹ control the cock D. Various cocks are fitted to the U-tube to control the apparatus by hand. The action is as follows:—Having exhausted the air in the longer leg of the U-tube by the bellows, and consequently caused the liquid to rise, the index-hand makes contact for the circuit of M, opening the cock D and completing circuit for the battery B so that the gases are generated. When the gases have driven the liquid back to zero position the cock-closing circuit is completed and the supply circuit broken. The apparatus is then exposed to the light to be tested, which is admitted through a narrow slit in the guard tube, and the rapidity of the movement of the index-finger, as the gases combine and the liquid rises, measures the actinic power. A record may be kept on a drum revolved by clockwork, the pencil being traversed along the drum by a screw rotated by a descending weight and controlled by an electric escapement from the rotating pulley G.

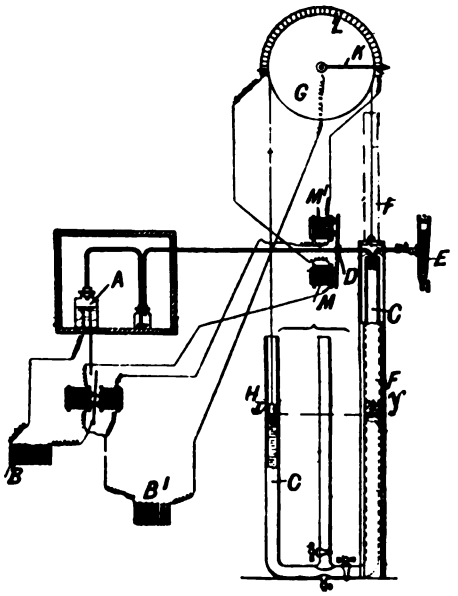

14,555. Hicks, J. J. Nov. 10.

Thermometers.—Relates to registering-thermometers and consists in making the head A of the index needle B flat, so that it can be used with an oval or flattened bore; the thermometer has preferably a lens front.

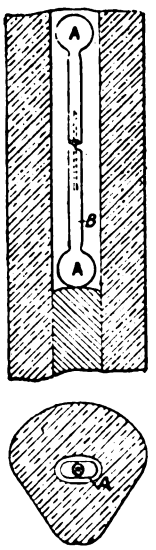

14,650. Read, W. Nov. 12.

Lenses combined with drinking-cups. The cup is collapsable, as shown in Fig. 1, and consists of a series of conical rings diminishing in size; the lowest A is fitted at the bottom with a lens or "eye glass" B, Fig. 2, for the use of jewellers, mining prospectors, &c. The various rings are formed with special devices for preventing their falling apart; and, when collapsed, they may be folded or placed in a case such as C.

(*For Drawings see next column.*)

14,650.

FIG. 2.

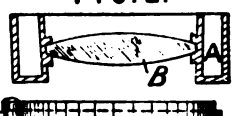

FIG. 1.

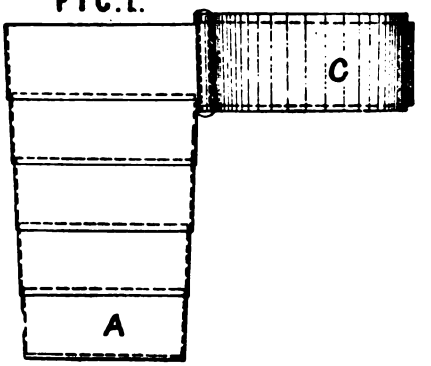

14,730. Watkin, H. S. S. Nov. 13.

Barometers.—Relates to the class of aneroid barometers, where the index-finger is capable of two or more revolutions over an extended scale. (1) The spiral spring A which controls the motion of the index-finger B usually has a tendency to buckle. To prevent this the spring may be enclosed in a shallow box C; or, it may be replaced by a helical spring surrounding the index-finger spindle D; or, the spindle may have a helical groove formed thereon round which passes a cord attached at one end to a helical spring; or, the spiral spring

Digitized by Google

may be placed round an independent spindle connected with D by reducing-gear, so that it turns through a much smaller angle than the index-finger. (2) To show which of the two or more

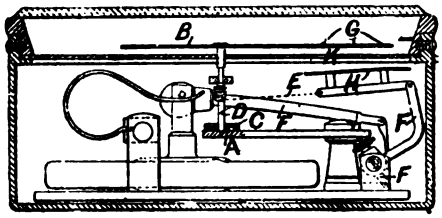

concentric scales is to be read, various devices are used, actuated by the chain E connecting the vacuum chamber lever F, F with D. In the Figure, the finger B has three pointers G, one for each scale, and which to use at any time is indicated by that number on the plate H which lies under the aperture K in the dial plate. A spiral scale is sometimes employed, in which case the dial itself revolves, and the pointer travels in an adjacent spiral groove.

14,811. Griffin, F. Nov. 15.

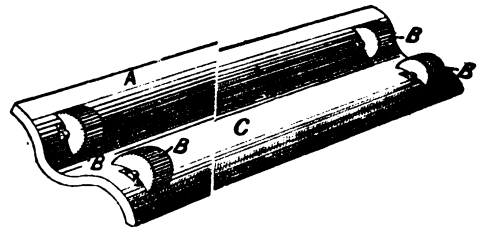

Parallel rulers.—A plate A of any suitable material, curved as shown, is mounted on four wheels B, B. In ruling, the fingers are placed in the concavity C, and the pencil or pen drawn along either edge.

14,891. Sutton, S. H. Nov. 17. *Drawings to Specification.*

Rulers.—A tube-shaped pen, pencil, or other case forming a calculating-apparatus or ready-reckoner and time-teaching appliance for children is also adapted to serve as a ruler.

14,899. Gare, T. Nov. 17.

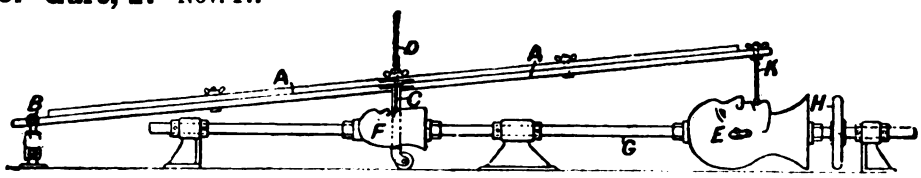

Pantographs.—The apparatus is intended for copying designs in colour, cutting materials, profiling sculpture, &c., and the invention consists in substituting for the ordinary pen or pencil of a pantograph a special form of pen (capable of holding several colours to be used together or successively), a rotary tool, or tool with chisel movement, &c. In the Figure the apparatus is shown as arranged for profiling sculpture. A is a pantograph which can in addition to its usual movement be moved vertically about the hinge B; the pen is replaced by a rotary tool C driven by a flexible shaft D. The model E and the block F on which the model is to be reproduced are fixed on a shaft G which can be turned by the hand-wheel H. The tracer K is moved over the model E and the rotary tool C copies the outline in the block F; by turning the shaft H slowly the entire block may be carved. In the case of colour, a bottle is used having a number of radial compartments each holding a different kind of colour. The liquid or powdered colour, sand, &c. may be applied by an air blast. For cutting fabrics a rotary tool is employed, and for engraving a chisel tool actuated by a flexible shaft. Several such tools may be used simultaneously.

14,931. Burns, W. Nov. 17.

Spectacles; telescopes; microscopes; lenses, holders for. Relates to elastic frames for enabling lenses or plates to be applied in situations where it is desired that they should be readily inserted or removed. They are made of india-rubber or other extensible material with a groove for the reception of the glass, and are attached by cement &c. The invention is applicable, among other purposes, in connection with the lenses of spectacles, telescopes, and microscopes.

Digitized by Google

14,960. Levetus, H. Nov. 18. *Drawings to Specification.*

Compasses, magnetic.—A compass is combined with the lid of the case for a collapsable drinking-cup, so that the dial may be seen from the outside when the cup is closed.

15,000. Simpson, W. S. Nov. 18.

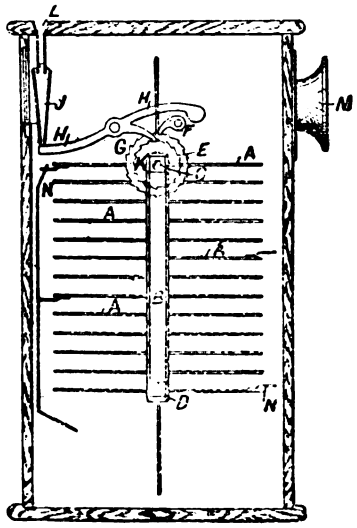

Stereoscopes.—Relates to coin-freed apparatus for exhibiting stereoscopic views &c. A series of stereoscopic views, photographs, &c. are mounted in frames A, A, A attached to the links of an endless chain B or the like passing over pulleys C, D. Motion in the wrong direction is prevented by the ratchet E and detent F, while the apparatus is normally locked by the pawl G on the counter-balanced lever H gearing with the ratchet-wheel K. When a coin is inserted through the slit L it falls into the pivoted hopper J and depresses the lever H, setting the spindle of the ratchet-wheel K free. After a certain number of views have been observed through the eye-holes M, a projecting finger N on one of the frames pushes the coin off the lever H, which then locks the wheel K, the coin falling down into the till. The eye-holes may then be closed by a shutter, or the next frame may hold an advertisement instead of a view.

15,187. O'Reilly, W. P. Nov. 22.

Magic-lanterns.—The apparatus can be adapted for use as either a photographic camera, photographic enlarging lantern, or magic-lantern. The bellows *a* is made so that it can be detached from the front and back *b* and b^1. The bellows is attached to frames *a*, a^1 made to fit in grooves *c*, *c* in *b*, b^1. The inner surfaces of the camera ends *b*, b^1 are lined with blackened tin plate *d*, *d*. The front is secured to the baseboard *e* by a screw b^2, and the back to the sliding piece e^1 by the screw b^2×. The focussing-glass and slide are fitted in the groove *g*. When used as a magic-lantern a metal case is

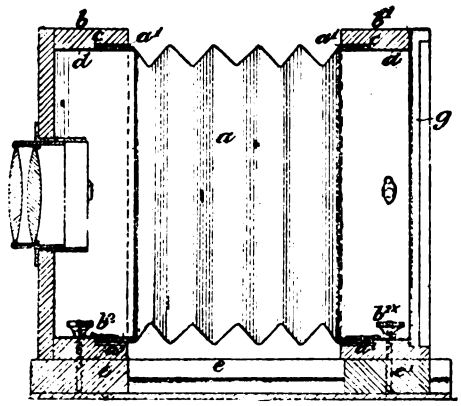

substituted for the bellows. A tin back and reflector is slipped in the groove *g*, and the conical front with slide holder attached in any suitable manner.

15,192. Bruce, E. S. Nov. 22.

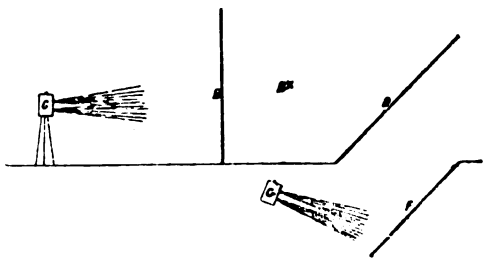

Dissolving-view apparatus. — The object is to cause a portion of the view, *e.g.* the foreground, to stand out in bold relief. For this purpose the background is shown by the lantern C on the transparent screen B. The foreground is shown by the lantern G on the sloping screen F, and a reflection thereof on the sloping sheet of plain glass D stands out clearly in relief at B×.

15,697. Parker, J., and **Lee, D. T.** Dec. 1.

Tripod stands for cameras, colour boxes, &c. The legs A are held in their extended positions by a clamp which also connects them to the camera &c. The head of the bolt B engages a slotted plate C on the underside of the camera &c. D, and by screwing up the winged nut the plates E are held between the claws of the clamping-plates F, G. When metallic legs are used, balls on their upper extremities are gripped between two clamping-plates. Half-balls on the sides of the

Digitized by Google

wooden legs may be gripped by corresponding recessed clamping-plates. Instead of the head of the bolt engaging a slotted plate C the bolt may be formed with fingers gripping a ball on the

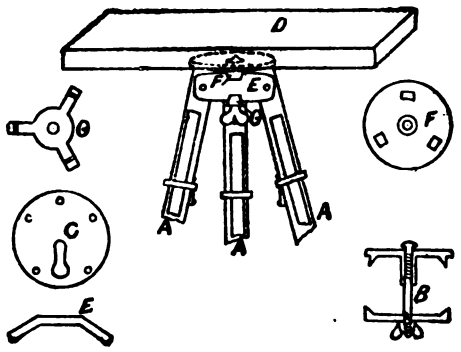

underside of the camera D. Another form of clamp is described, consisting of a band passing round grooved segments of a sphere and tightened by a nut. The telescoping portions of the legs are secured together by sliding rings and wedge pieces.

15,786. Barnard, E Dec. 3.

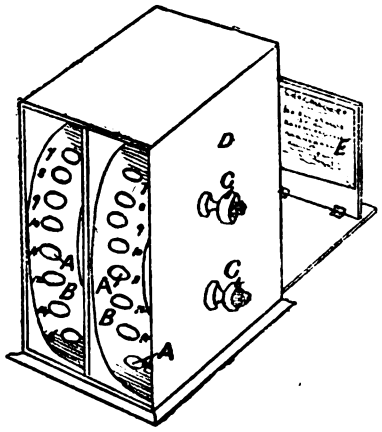

Sight-testing apparatus.—Spectacle lenses A are arranged on two flexible strips B which can be wound from one to the other of two rollers C mounted in a case D. The front of the case (which has been removed) has two eye-holes opposite the space between the rollers. The back is open, and behind it is a board E of test type placed at the normal reading distance from the eye-holes. The test type is observed through the lenses as they are brought in succession to the eye-holes. The strips can be used separately so as to suit odd eyes. In order to look at distant objects the board E is hinged so that it may be turned down out of view.

15,842. Potts, J. Dec. 4.

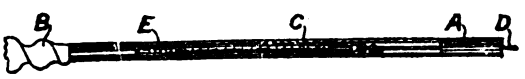

Thermometers for silos, stacks, &c. A tube A with auger end B is screwed into the stack, and a maximum thermometer C is then let down into it by a cord D to obtain the temperature. The bottom of the tube and the protecting-case E of the thermometer are perforated to facilitate access of heat to the thermometer. The case E has an india-rubber plug at the bottom to prevent breakage of the thermometer by shock against the bottom of the tube.

15,873. Kingdon, Z. H. Dec. 4.

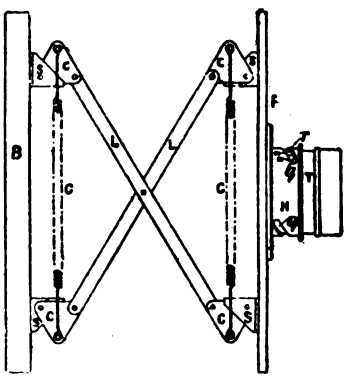

Magic-lanterns.—The fronts and backs of photographic cameras, magic-lanterns, and similar apparatus are connected by systems of links or levers, which are constrained by springs, stops, catches, &c. The front and back can thus be separated or pushed together by one simple movement. In the Figure they are shown connected by the diagonal links L, L, to the ends of which are pivoted triangular links C, C, which are themselves pivoted to the brackets S, S on the front and back. The springs G, G, which are connected to the links C, C, maintain the tensions on the links L, L. Other arrangements are described, in one of which stretcher levers are jointed like the blade joint of a knife, while in another the stretcher bars or levers have stops near their joints which prevent them from doubling backwards except a small amount past their dead centres. The focussing is effected by moving the lens T by the rotation of a sheath H with inclined slots q, q, which act on studs r, r. The senses of touch and hearing may be used for focussing and adjusting lenses, by the action of a spring on notches &c.

Digitized by Google

16,202. Heath, G. W. Dec. 10. *Amended.*

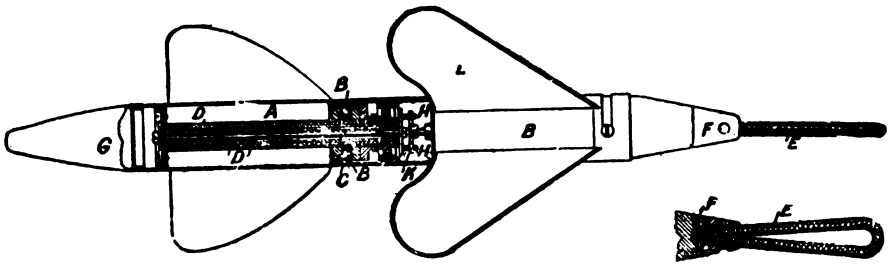

Logs.—Relates to various detail improvements in both towing and taffrail logs. The Figure shows a section of the former. The end pull friction of the rotator A is reduced by antifriction balls B or by a series of coned rollers, the balls or cones being mounted in a loose ring C; also the rotation spindle D is carried by a long hollow bearing with a loose sleeve between to further decrease the friction, and is connected at one end with the external sleeve D¹ forming part of the rotator; the former arrangements are also applicable to the taffrail log. The rotary parts are oiled through holes in the fixed casing B, or by a slow-dropping lubricator on the fixed casing of the taffrail log. The line is attached to a loop E with the two ends knotted together so as to be held within the screw cap F, or the knot may be made on the line and passed through a lateral hole in a hollow cone at the front of the rotator: an air chamber G is formed at the back of the log to keep it well immersed. The rotations of the main spindle D are communicated to the register by pins H, H on a sort of double crank K at the end of the spindle or by wheel gearing. The balance wings L of the towing-log are placed at the front of the fixed casing. In the taffrail log special arrangements are made in connection with the dials and for locking the bezel holding the glass cover. The line is attached near the register to a triple line which passes through the three corners of a triangle of brass termed a "regulator," and is then again united into a single line; for lightness and strength the strands of the line have, some or all, a core of copper.

16,414. Popplewell, W. W., [*Trueb, J.*]. Dec. 14.

Thermometers for use in connection with apparatus for regulating steam, air, or hot-water heating systems. A vessel A, preferably formed of a series of tubes closed at the top and open below to the hollow base, is filled with a suitable fluid and communicates by a passage b^3 with a cylinder *c* fitted with a piston D, the rod of which is provided with rack teeth which gear with the teeth on the pivoted segment F. The cylinder *c* is filled with oil from the adjacent vessel E, which communicates with it above and below by passages b^5 and b^2, and is fitted with a stop valve b^4. The segment F forms one arm of a three-armed lever, the other two arms F^1, F^2 forming index-fingers for indicating respectively, upon suitable scales, the temperature of the room and the temperature at which the apparatus is set. This three-armed lever is pivoted at f^3 and is attached by an adjustable set-screw f^2 to a ring G^1 also pivoted at f^3 and secured to a curved lever G. This lever rests upon a horizontal antifriction roller carried by a lever H and resting at h^3 upon the upper end of a vertical rod H^1 pressed upwards by the spiral spring H^2. By means of the curved lever G the pressure upon the spiral spring is kept constant during the oscillation of the piston. The lever H carries also another antifriction roller *h* which bears against a vertical lever L pivoted at h^8 and attached at the other end to a spring lever connected to the supply valve. The supply valve is arranged in a casing to which the heating-medium is supplied, and is connected by a link to one arm of an angle lever, the other arm of which is connected to a

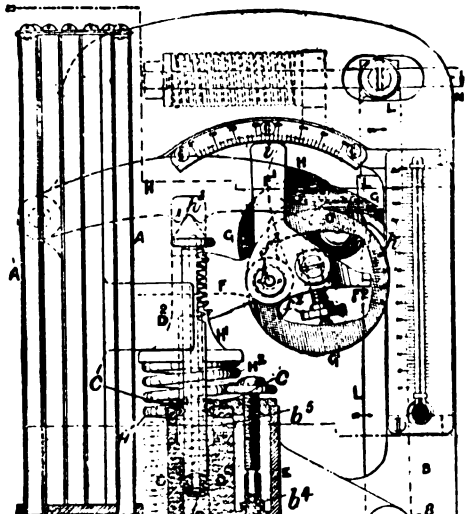

Digitized by Google

balancing-valve. In some cases the ring G^1 may be dispensed with and the lever G be connected directly to the lever L, and in a simpler form the levers G and L are also dispensed with and the lever H and the supply-valve lever are connected directly with the segment F and arm F^1 respectively.

16,464. Day, J., and **Cartwright, W.** Dec. 15.

Spectacles.—Consists in pivoting a second pair of lenses to the ordinary lenses so that they may be turned down in front of the first pair and thus increase the power for reading &c. The extra lenses *f*, *f* are fixed to a spindle *a*, which is provided with a button *b* at the end for turning it, by clips *c*, *c*, and the spindle works in bearings *d*, d^1 on the frame, one of which is slotted laterally so as to allow of the withdrawal of the second pair of lenses; *g* is a stop for facilitating the correct alignment of the lenses.

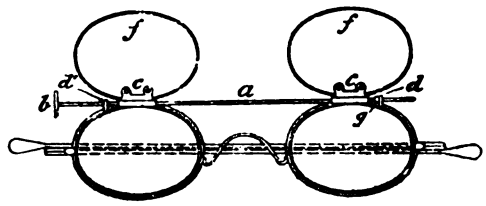

17,061. Goldsmith, E. M., and **Reizenstein, E.** Dec. 29.

Mathematical drawing-instruments.—Relates to instruments for laying-off or plotting geometric and other figures. A circular disc A is graduated at A^1 as a protractor, and has variously-shaped figures cut out of it for the purpose of guiding the pencil in drawing figures and curves. A central perforation G is made through which a pin may be passed and the disc rotated about it: also radial lines of perforations into any two of which a pin and pencil point may be inserted for describing circles. The right lines 3, 4, 5. . . . are for describing regular figures, triangle, square, pentagon, &c., and the scrolls H, H and pear-shaped hole J for plotting out various curves approximately.

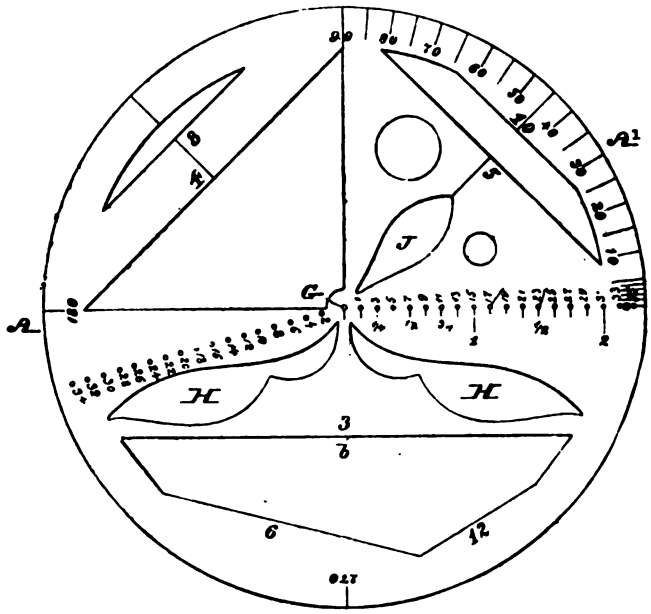

Digitized by Google

A.D. 1887.

146. Weekes, C. Jan. 5.

Sounding - apparatus.—Relates to buoys for sounding, intended to be thrown to a distance from the ship, with or without a light line attached, by means of a rocket or gun. One form is shown in the Figure; it consists of a cylinder A attached to a box B containing a spool C on which a cord E is wound and fixed at the free end to a weight F, which is heavy enough to sink the whole apparatus. The bottom of the box is closed by a plug G fixed by a washer of dry paper pulp G¹. The upper end of the cylinder carries a signal flag, blue light, or detonating substance and fuze. When the buoy reaches the water, the paper pulp G¹, softening, allows the plug G to fall out and the cord E to unwind from the spool. If then the length of the cord is sufficient the buoy will be seen floating on the surface, or the explosion of the detonating substance will be heard. If the buoy sinks the depth is known to be greater than the length of the cord.

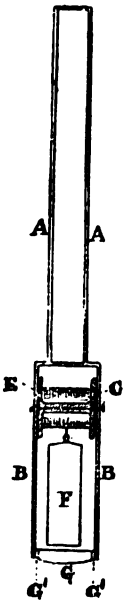

627. Jackson, L. C. Jan. 14.

Rulers; scales; protractors.—Relates to a rolling ruler which is also adapted to serve as a scale and protractor. The ruler A has a scale B attached by a joint C at one or both ends, so that when the roller is rolled on wheels D from one position to another the exact distance of the movement may be controlled. The edge of the scale may also be graduated in angles with regard to a point E on the ruler, so that the instrument may be used as a protractor. A sector joint may be made in the scale so that two series of parallel lines can be drawn inclined at any desired angle.

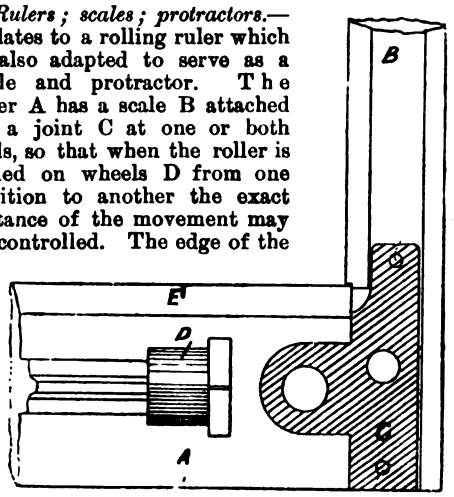

798. Lubin, S., Frawley, J. J., and **Abraham, A.** Jan. 18.

Eyeglasses.—The bridge B is fixed to the lens frame A of a pince-nez by a screw D passing into the stud C. Upon this stud, and similarly fixed, is a strip of metal E which is curled round at its end, and to which is pivoted the nose-clip F by means of a central lug G. This arrangement enables the glasses to be set at any required distances from, and angle with, the eyes, while the clips adjust themselves readily to the shape of the nose.

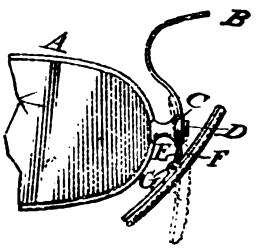

Digitized by Google

1082. Clark, A. M., [*Villepigue, A. E. D. F. de*]. Jan. 24.

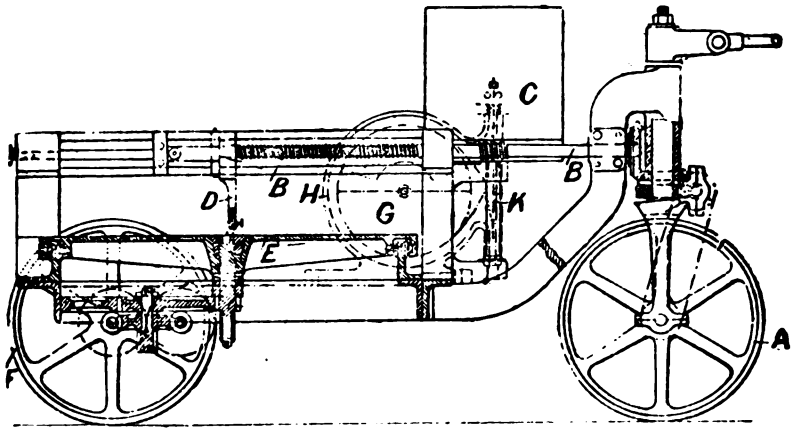

Roads, determining inclines and curves of. —A carriage mounted on three equal wheels is drawn along the road. The front or guiding wheel A is geared with a worm shaft B which rotates a drum C on which the gradient diagram is taken, and draws forward the pencil D on the circular table E to which the paper for taking the length and direction diagrams is fixed. A central spindle of this table is connected by differential gearing with the two hind wheels F, which revolve independently, in such a manner that when the carriage moves along a straight line the table is stationary, but when it turns a corner, or goes round a curve, one of the wheels revolving faster than the other causes the table to revolve. It follows that the pencil will describe a radial line (proportionate to the distance travelled) so long as the carriage moves straight forward, but will deviate proportionally as the carriage turns to either side. For obtaining the gradient diagram a float, consisting of a metal cylinder G with a liquid-tight segment (shown in dotted lines), floating in mercury in a cylindrical casing H, is connected by flexible bands with the rod K which carries the pencil for marking the cylinder C.

1324. Joseph, I., [*trading as* J. Davis & Co.]. Jan. 27.

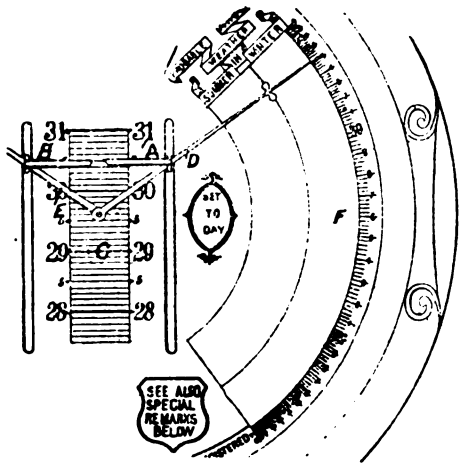

Barometers. — The movement of the reading-indices A, B over the central scale C is magnified by the index-fingers D, E, which pass through loops on two vertical racks at the back of the dial and move over magnified scales F for delicate readings. One finger corresponds to the current date, and the other to the day before, and each is set by turning a pinion gearing with the proper rack by means of a key. Below the dial a series of small dials are fixed for recording the readings of previous days.

1346. Stevens, H. Jan. 28. *Drawings to Specification.*

Levels for billiard or bagatelle boards or tables. The loose piece which closes the end of a folding bagatelle board is adapted to serve as a marking or scoring appliance, and is fitted also with a spirit level, the combination with which is claimed.

1364. Farrell, W. T. Jan. 28.

Levels and plumb-rules.—Relates to a combined gauge and level designed for marking the mouldings and mitre lines on stone. The stock A has a longitudinal slot for the graduated blade D to work in, and a second slot *a* at right-angles thereto in which works the spindle of a pointer *b* on a scale carried by the sliding piece B. This spindle has an arm projecting from it which is embraced by the legs of the blade D so that the pointer *b* indicates the angle at which the blade is set with the stock. A clamping-screw is fitted on the end of the spindle to lock the parts in any desired position. The tracer E is slotted from end to end, the inner facings being rough, so that a slight pressure by the fingers binds it on the blade. Fig. 1 shows the instrument ready for marking longitudinal mouldings, the stock being placed on the top of the stone

Digitized by Google

and moved along it. In an analogous manner the mouldings round a circular base may be marked. Fig. 2 shows the method of marking mitre lines. The blade D is in this case wedged at the proper

FIG. 1

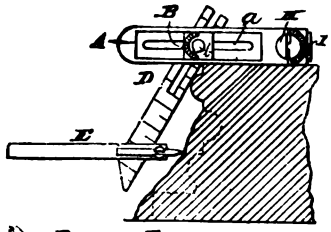

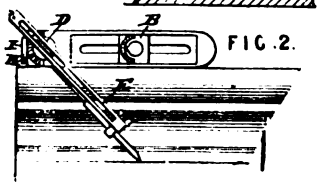

FIG. 2.

angle into the slots between the two parts of a revolving socket H, and the scriber E moved up and down on the blade. I is a small plumb-bob for levelling the horizontal planes of the mouldings.

1581. Boyer, J. Feb. 1.

Anemometers.—The invention is described with reference to a speed indicator for locomotives &c., but is applicable also to the measurement and recording of the velocity of wind. The main shaft A of the indicator, which receives motion from a wheel axle by a

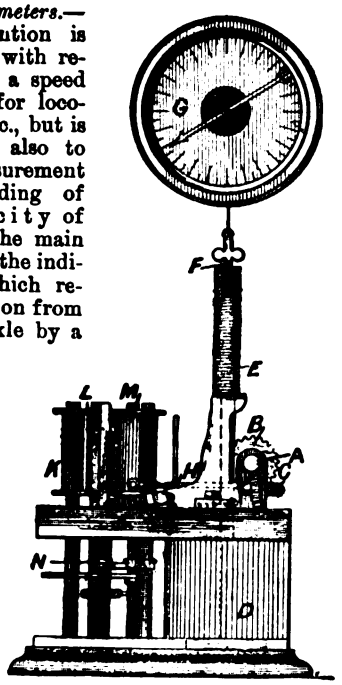

strap and pulley, actuates bevel gear B, C driving a rotary or other pump D; the bevel gear includes a sliding clutch to ensure the pump being driven in the same direction when the engine is reversed. A piston and cylinder are arranged close by in connection with the pump, which draws fluid from above, and forces it in below, the piston; as the piston rises against the tension of a spring E surrounding its rod F it exposes more and more of a leakage port until equilibrium is established. The piston-rod is connected with an indicator G and carries a pencil H for tracing a record on a paper strip stretched between drums K and L and over the drum M. These drums are all driven by special gearing from the shaft A, K and L being mounted in frictional contact with their shafts so as to allow slipping when the paper is too tightly strained owing to the changing diameter of the rolls. The strip is held against the drum M by spring-controlled rollers, which, with the pencil H, are connected by a system of links N so that they can be simultaneously thrown out of action.

1770. Murrie, J. Feb. 4

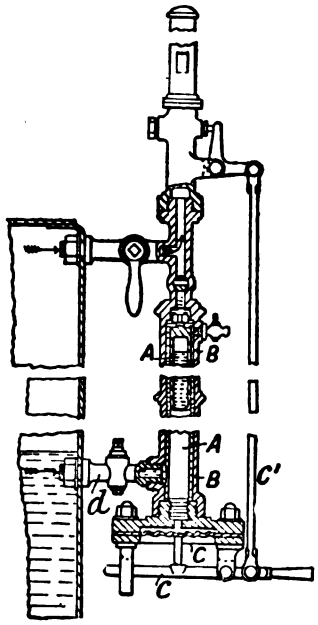

Thermometers.—Relates to an improvement on the inventions described in Specifications No. 303, A.D. 1885, and No. 2520, A.D. 1886, and consists of means for indicating and regulating the temperature, pressure, and water level in boilers and other closed vessels. A vessel A, closed at its upper end and containing water or other fluid, is enclosed in a casing B connected with the water space of the boiler by a tube *d* at the lowest water level. The lower end of the tube A is open and the liquid in it communicates either directly as shown, or through a coiled or other pipe, with a diaphragm C. The chamber B is filled with water so long as the level in the boiler is above the tube *d*, but when it falls below this steam will displace the water in B and will cause the water in A to boil and the

Digitized by Google

diaphragm C to be moved outwards by the extra pressure produced in A. The diaphragm carries a stud which actuates levers c, c^1 which may sound a steam whistle or other alarm as shown, or may operate a safety-valve, or may cause the contents of a water reservoir on the top of the boiler to be emptied into the latter, thus forming an automatic feed regulator. In order to keep the temperature of the diaphragm as low as possible, a long coiled pipe may be interposed between it and the bottom of the vessel A, and to this pipe may be connected a gauge graduated to show pressure and the corresponding temperatures.

1884. Harrison, M. Feb. 7.

Bearings, instruments for determining.—Relates to an instrument for finding the position of a vessel without a compass from the given positions of three landmarks, and thereby correcting compass errors. Over a circle A graduated in points of the compass and angles move three radial arms B, C, D, graduated from the centre to a scale of distances. On the arm C slides a graduated circle F, at the centre of which are pivoted arms G, H, graduated for distances like B, C, D. The mode of using is as follows:—The true bearings and distances from each other of the three landmarks X, Y, Z being known, the arms B, D are set to the bearings of lines X Y, Y Z and simultaneous angles are taken from the vessel between the middle landmark Y and the other two. The arms G, H are then set so as to make these angles with the arm C. The circle F is then slid along the arm C and the arm turned till by trial the arms G, H cut the arms B, D at the known distances of Y from X and Z. The pointer in line with the arm C then shows on the scale A the true bearing of Y from the vessel, and the reading of the edge M on the arm C gives its distance. By comparing the bearing thus found with the compass bearing, the error of the ship's compass can be obtained.

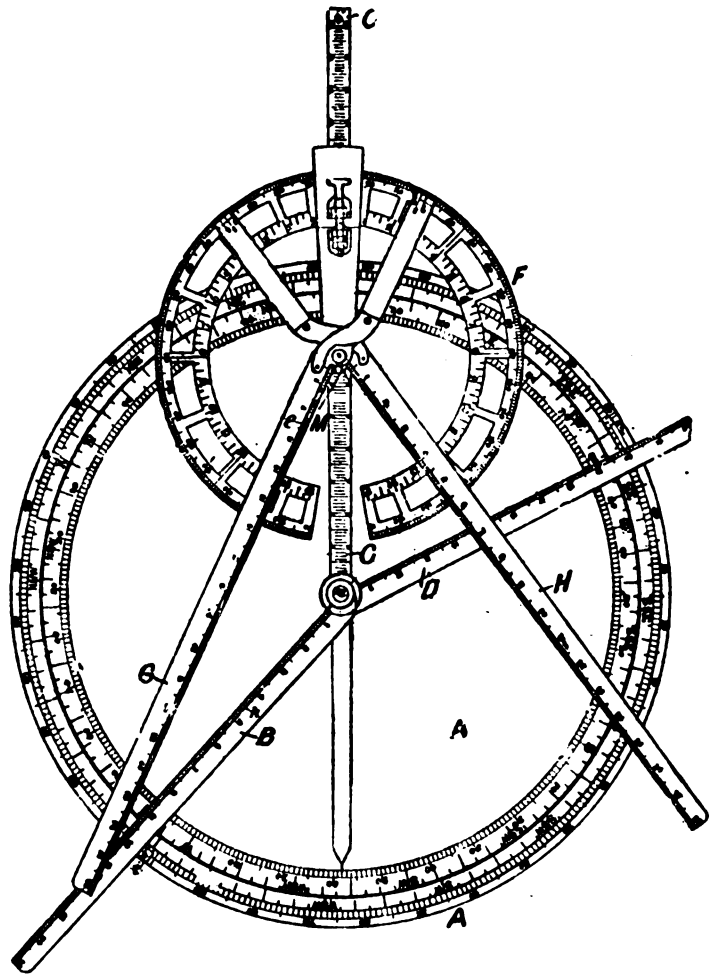

1905. Woolfert, A., and **Ketterich, O.,** [*trading as* Albert & Otto]. Feb. 7.

Opera-glasses, handles for cases of. The ends of the flexible handle, preferably made of metal or other links, pass through slots in the metal case or fixing-plate a. The end links d are connected to springs c and have wire stops e. When not in use the springs draw the handle close to the face of the case a; when in use the springs are expanded till the stops e come close to the slots. The plate or case a may be in two parts.

(*For Drawing see next page*)

Digitized by Google

1905.

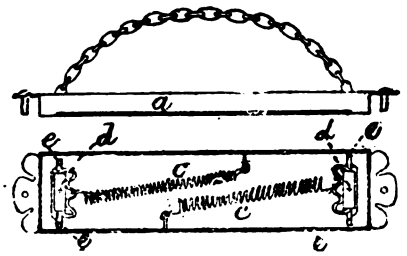

1926. Lake, H. H., [*Spencer, R. L.*]. Feb. 7.

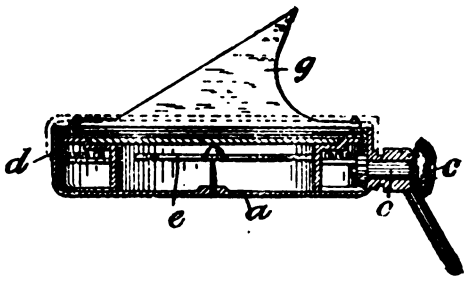

Compasses, magnetic.—Relates to a portable sun-dial and compass. Within a sheet-metal case *a* is placed a magnetic needle *e*, and above this an annular card *d* with downwardly-turned flange, in which are formed teeth to engage with a pinion on the spindle *c*. Spanning the card and attached thereto is the hinged style *g*, which can be turned down when the instrument is not in use. The card is marked with the cardinal points (a few degrees being shown on each side the north point to correct for the compass error) and with time graduations. To use the sun-dial the case is held horizontally and the dial rotates by means of the milled head *c*, until the needle shows the meridian to be true. Around the edge of the card 31 equal divisions may be marked, and a fixed pointer provided on the case so that the instrument may also be used as a calendar.

2020. Heath, C. Feb. 9.

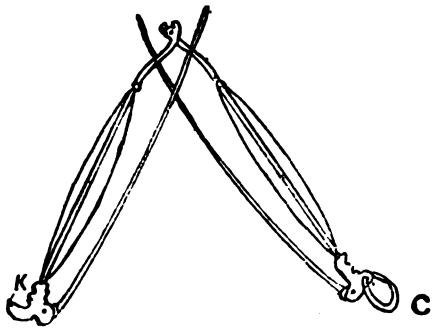

Spectacles.—The frames are hinged at the centre of the nose piece, and the arms are made about half the ordinary length. A loop C and catch K are provided for fixing the spectacles when folded, and a cord may be passed through the former for suspension from the neck of the wearer.

2137. Millar, G. A. Feb. 11.

Spectacles and eyeglasses, cleaners for. Consists of two leaves of soft, flexible material, such as felt or leather, smeared with rouge or other polishing-powder; the spectacles &c. are rubbed between them.

2249. Engelhard, L. Feb. 12.

Sight-testing apparatus.—The eye of the patient is placed against the funnel-shaped support A adjustable vertically on the standard B; behind this eye-piece revolve two discs C, D carrying cylindrical and spherical lenses respectively around their circumferences. At the head of the standard B is fixed a combination of lenses E by which the distance of the far point of a normal eye is reduced for convenience in the subsequent operation. On the graduated bar F slides a support G for test letters, and behind the instrument at a distance of 9 feet is placed a plane mirror. For testing the far and near point, the patient observes the test letters, placed at his side, in the plane mirror, suitable lenses being brought before his eye by means of the discs C, D but the combination E being removed. The cylindrical lenses in C can, by reason of their disc being mounted on a revolving

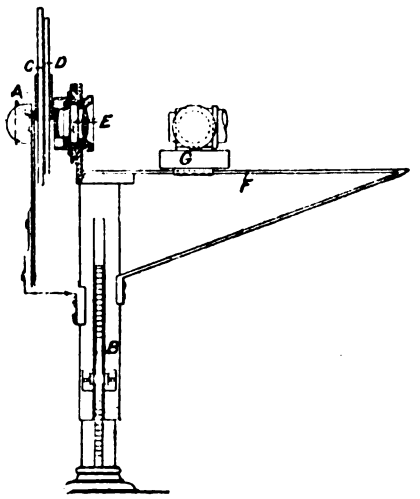

arm, be set with their axes at any angle so that the proper combination of cylindrical and spherical

Digitized by Google

lenses, where astigmatism occurs, can be discovered. Further tests are made by replacing the combination E and putting the test letters on the sliding support G; these are first observed without any assistance from the lenses in the discs C, D, but the support is moved on the bar F and the graduation for clear vision noted. Next the support is moved to the extreme end of the bar, and the last result checked by bringing the requisite lenses on the discs C, D into use. In cases of strabism a revolving prism is employed to test the distortion. As a final confirmation of to the whole diagnosis, the eye itself is examined by a special form of ophthalmoscope, the disengaged eye meanwhile observing some distant object such as a white card with blue rings for the purpose of relaxing the ciliary muscles. The patient and operator look into opposite ends of a telescopic tube with the necessary magnifying-lenses; light is directed through a branch tube and suitable reflectors and condensers to the eye of the former, and the retina rendered clearly visible.

2345. McArthy, D. Feb. 15. *Drawings to Specification.*

Pyrometers.—A copper rod or coil in a baker's oven, the expansion of which operates the dampers controlling the air supply to the furnace, operates a pinion outside the oven, the said pinion having an attached pointer moving over a dial to indicate the temperature of the oven.

2493. Biggs, F. J. Feb. 17.

Field glasses.—Consists in fitting a stop-watch A to the field glasses B by means of a loop on the back thereof sliding over an adjustable finger on the body of the field glasses. The method of attachment may be varied. A glass panel in the case of the instrument allows the watch to be seen without removing the glasses when they are not wanted.

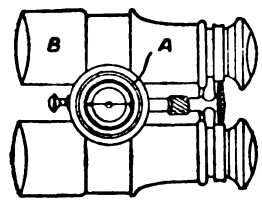

2790. Mason, W. F. Feb. 23.

Thermometers combined with clocks. The temperature of a baking-oven is shown by any of the ordinary instruments on a time dial having a hand to indicate when the batch was set in. A clock face may be used, and the clock may sound an alarm at the time for drawing the oven.

2836. Frankenberg, E. Feb. 23.

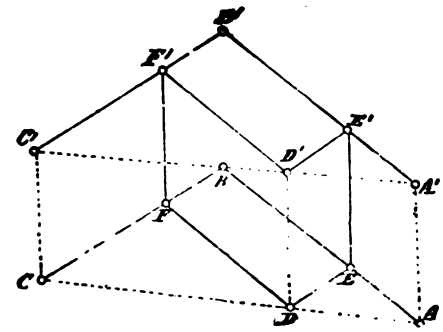

Pantographs for use in machine-embroidering, and for producing designs on lithographic stones &c. Two pantograph linkages A, B, C, D and A^1, B^1, C^1, D^1 are coupled together by pivoted bars A A^1, E E^1, D D^1, F F^1, and C C^1, so that both move simultaneously. The driving or tracing and driven or describing points may thus be placed on the bars C C^1, D D^1, or on branches projecting from the same, instead of being confined as in the pantograph to the line A D C. Any number of driving or driven points may be used.

3018. Walters, W. M. Feb. 26.

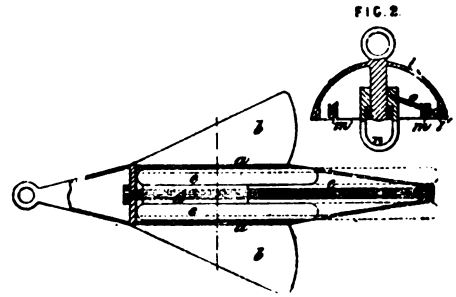

Logs.—In a taffrail log the cylinder *a* carrying the fins *b* surrounds a screw *c* on which is a nut *d* having long straight wings *e*. The wings slide between guides and by turning the screw are projected to adjust the speed of rotation. In order to give an alarm if the rotation of the tow line is checked, it is divided and the fore part is tied to a bell dome, Fig. 2, having burrs *m* round it at intervals, while the aft part is tied to a swivel *n* carrying the striker *o*. When the fore part of the rope is held the aft part continuing to rotate takes the clackers over the burrs and sounds the bell. The bell may be replaced by a rattle and both are applicable to towing-logs as well as taffrail logs.

Digitized by Google

3089. Silveira, F. A. da. Feb. 28.

Thermometers. — Relates to clinical thermometers. Within a shallow box, suitable for applying to parts of the body, is mounted an index-hand A worked by a compound metal strip B coiled into a spiral, the end of the hand showing through a graduated slot. At the other end the index hand carries a marker C tracing on a graduated strip of paper D drawn forward by clockwork between the rollers E and F.

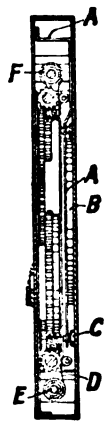

3161. Ferguson, F. O. March 1.

Compasses and dividers.—The head stem E is fluted and provided with a swivelling cap A.

3285. Stuart, G. March 3.

Adjustments for telescopes and "other "scientific instru- "ments." The mechanism is described as adapted for adjusting the sight-bars of guns, but it is stated to be applicable for adjustment as above mentioned. The spindle A has a coned end B upon which a worm is cut to gear with a rack C. The worm is drawn back out of gear when large movements of the bar are required.

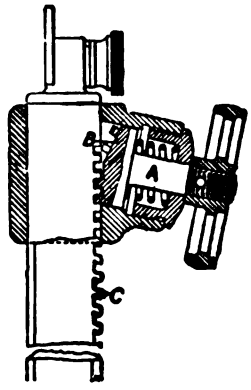

3419. Thorne, J., and **Burr, E. B.** March 5.

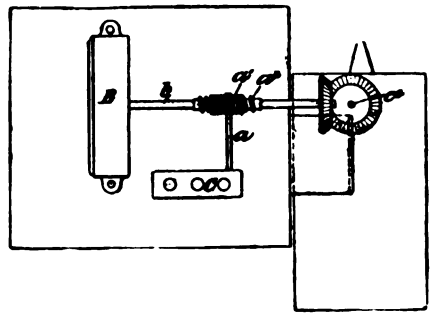

Logs; current meters.—Consists in combining the special speed indicator described in Specification No. 6931, A.D. 1886, with a log rotator so as to indicate the speed of a ship; if desired, a log register may also be combined driven from the same rotator. The log rotator (not shown) has a worm on its spindle which drives the shaft c^3, mitre-geared with the shaft b. The speed indicator B consists of a copper drum rotated in a magnetic field, the induced currents being utilized to actuate the index-finger. The copper drum is rotated from the shaft b. On b is fixed a worm a^2, gearing with the worm-wheel a^1 on a spindle a, the rotation of which actuates an ordinary log-register c.

3689. Beck, W. H., [*Soc. F. Benoist et L. Berthiot*]. March 11.

Lenses and spectacle glasses, grinding and polishing. The Figure shows the arrangement for grinding cylindro-convex glasses. The glasses are fixed on segments attached to a revolving cylindrical drum a, and subjected to the action of a tool x curved to correspond with the required curvature of the glasses. The tool arm x^1 passes loosely through an eye in the rod q which receives a "coupling rod" motion from the cranks r, r^1 fixed upon vertical shafts k, k^1 driven by bevel gear from the countershaft f. The drum a receives both a rotary and reciprocating motion in the following manner; it is mounted on a shaft b which reciprocates in its bearings by means of its connection with the eccentric m on a cross-shaft o. This cross-shaft is bevel-geared with a shaft d parallel to the shaft b and connected with the countershaft f by gearing c, c^1, c^2. The rotary motion of the shaft b is taken from the shaft d by means of gearing e. By altering the shape or arrangement of the drum a and making slight changes in the motion, concave and spherical glasses may be ground or polished.

(*For Drawing see next page.*)

Digitized by Google

3689.

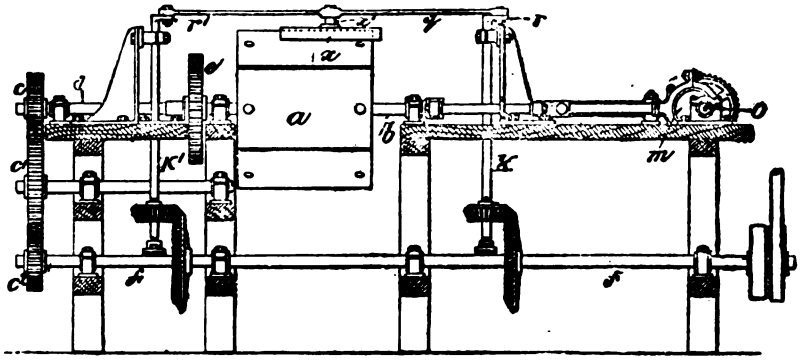

3827. Landon, E. I., [Executrix of *Landon, H. R.*], **Thackeray, W. T. W.,** and **Richardson, H.,** [Administratrix of *Richardson, J.*]. March 14.

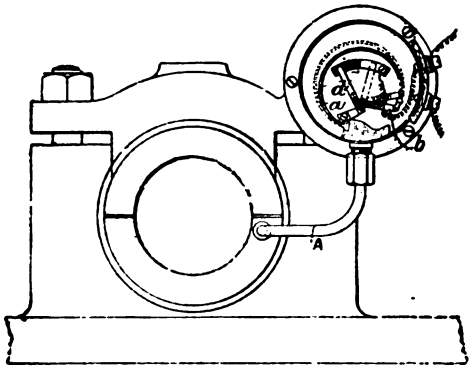

Thermometers.—Consists essentially of a reservoir in connection with a "Bourdon tube," both of which are filled with an easily-expansible gas or liquid and so arranged that the movements of the "tube" shall operate an alarm. The Figure shows the invention applied to a bearing; the reservoir A is connected to the "tube" *a*, of which the free end moves, by the adjustable link *b*, the contact-maker *d*. This contact-maker may pass over one or more contacts in connection with one or more electric bells, or it may be arranged to control a clockwork or other mechanical alarm. The apparatus is especially adapted to indicate heating of the brasses of connecting-rods of marine engines, in which case a portable battery and bell may be attached to the rod.

3859. Lovibond, J. W. March 14.

Colours, surfaces, textures, and the like, comparing and testing. — Relates to improvements on the invention described in Specification No. 12,867, A.D. 1886, by which the colours of transparent solids or liquids are standardized or measured by comparison with standard coloured glass strips and

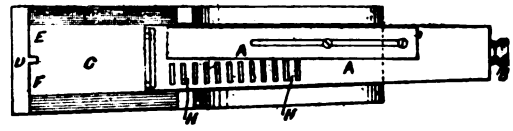

sometimes a coloured background. The instrument is now adapted for estimating, measuring, or comparing the surface, texture, and appearance of opaque bodies, materials, or fabrics, as well as for comparing colours. For comparing colours by transmitted light, the glass strips described in the Specification quoted above are now partially or wholly replaced by liquid or glass wedges. The wedge is moved across the field of view till it interposes a stratum which matches the solid or solution under examination. The Figure shows the arrangement for comparing opaque objects by reflected light. The observing-tubes A, running from the single eye-piece B, terminate in an open space C which admits light to a stage D divided into two parts E, F which may be fitted with blocks on which fabrics to be examined may be stretched, or with trays to hold powders &c. For measuring the intensity of colour of an opaque object, the object is put upon the part E, and its colour is compared with that transmitted through the glass strips H, or the wedges, from the white or coloured surface of the part F. The instrument may be inclined by a pivoted strut at the back.

4100. Stebbing, J. March 18.

Rulers. — Consists of a polygonal roller, plane or fluted; the flutes may extend the whole length

Digitized by Google

of the surface A, or may be confined to end pieces B.

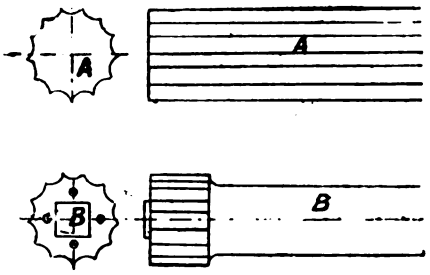

4135. Haight, H. J. March 18.

FIG 1

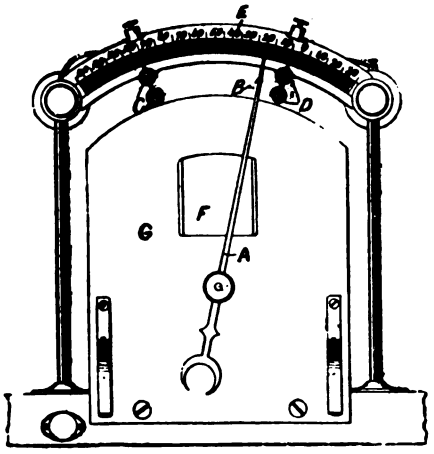

Thermometers.—The object is to obtain a thermoscope which will show the temperature and keep a record thereof, indicate the highest and lowest temperatures during a given period, and sound an alarm bell or display a signal when certain predetermined temperatures have been reached, any or all of such recording &c. devices being used as required by circumstances. Fig. 1 shows a view of the receiving-instrument; the index A, which receives its motion electrically from a distance, is provided with an insulated point B, by which contact is made between one pair of the light coiled springs C, D. These contacts are adjustable along the scale plate E, and fixed by changing screws at the desired temperatures. Circuit is thus closed for an electromagnet the armature of which carries a vertical rod; this rod, when moved by the attraction of the armature, operates a second sliding rod, which, thrusting together two contact-plates, closes the circuit of an alarm bell; it also passes through two slots in pivoted arms, which by its movement close together and bring two signal shutters attached thereto into sight within the aperture F in the face-plate G. A special circuit-breaking appliance may be used for cutting out the bell circuit when desired. The index A may also operate maximum and minimum fingers in the usual way. When a permanent record is

FIG.2

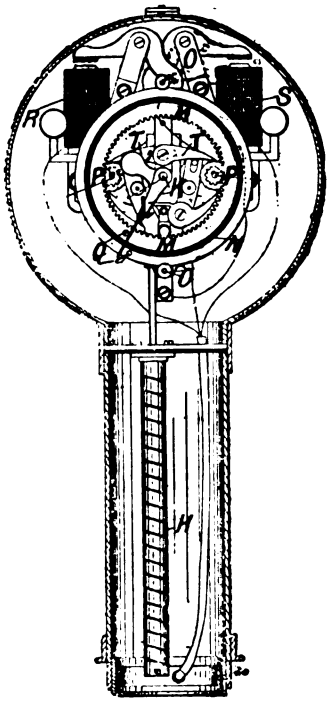

required, a drum driven by clockwork draws a ruled strip off a second drum, and over a flat plate. The tracing-pencil is drawn down a guide-rod by a cord passing round a pulley on the index-spindle, against the pressure of a helical spring. Fig. 2 shows the transmitting-instrument. The thermostatic coil H rotates the spindle K on which is the contact-making arm L. A metal ring M, divided into two parts by the insulating-ring N, is supported externally by the rollers O, O, and internally by the pinions P, P gearing with internal teeth on the ring; each separate part of the ring carries a contact-stud Q, separated by a little more than the distance moved by the arm L, for one degree change of temperature. As this arm makes contact with one or other stud, according as the temperature is rising or falling, circuit is completed for one or other of the magnets R, S, and the vibration of the respective armature causes the rotation of the spindle of the corresponding pinion by means of one of the pawls T, T, thus rotating the ring M and again breaking contact. A shunt circuit, including a local battery, may, by somewhat modifying the details, be employed to relieve the main line of this work. A number of the receiving-instruments may be placed together in one case, where the temperatures of several rooms &c. have to be observed together. The drum of the recorder may be actuated by a

Digitized by Google

pawl on the armature of an electromagnet, energized at given intervals by a clockwork movement; but, where several recording-instruments are employed, the drums may be revolved by being geared with a motor shaft or shafts actuated by a descending weight. The main motor shaft carries a disc, on which escapement teeth are arranged, and the necessary control is exercised by a pallet on the armature of a magnet, included in the time transmitting circuit.

4198. Verner, W. W. C. March 21.

Scales and protractors; clinometers; compasses, magnetic.—Relates to drawing-boards for surveying and military purposes, and consists in constructing them with rollers for holding and stretching the paper, with clamping-screws for securing the rollers, and with various scales engraved on the board. To the board are fixed a head-piece B, B and a foot-piece C, C. A plate F with a screwed socket M is fixed to each end of the head-piece, and through these sockets pass thumb-screws L, the unscrewed ends of which serve as pivots for the rollers E, E. Each of the rollers E is hollow and slotted on one side at H, and the paper is secured thereto by inserting the edge in the slot and then turning round the roller. The paper is held in the stretched state by screwing home the screw L, so that the roller is clamped

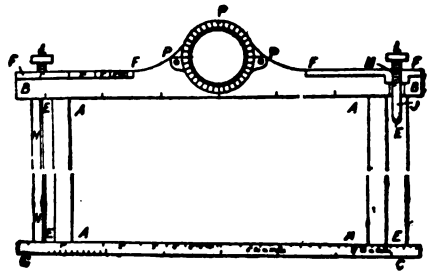

between the screw L and the foot-piece C. A compass is fitted in the graduated frame P, P. On the back of the board a semicircular protractor with a support for a plummet is provided, so that the board may be used as a clinometer, and small boards have at the back a wrist strap secured to a pivoted pin. The foot and head pieces are engraved with various scales.

4270. Rouse, J. H. March 22.

Stands.—Relates to an adjustable stand or pedestal for lamps and other articles. The head or receptacle A, which receives the lamp &c., is connected by a collar B to the tube C, which is closed at the bottom by a cap D. This cap carries a clutch formed by a braided-wire tube E, which grips the guide-rod H. The crosshead I of the tube K slides in vertical slots in the tube C. By depressing the collar of the crosshead the operator causes the flange L of the tube K to compress the braided-wire tube E, which expands, and releases its hold upon the guide-rod H. The tube C is then free to slide in the tube M until the tube K is released, when the weight of the tube C and the parts attached thereto stretches the tube E and causes it to clutch the guide-rod H. The tube K is normally supported out of contact with the tube E by the spring N. The invention is applicable to flower holders, music stands, and other articles; or the head may form a shelf.

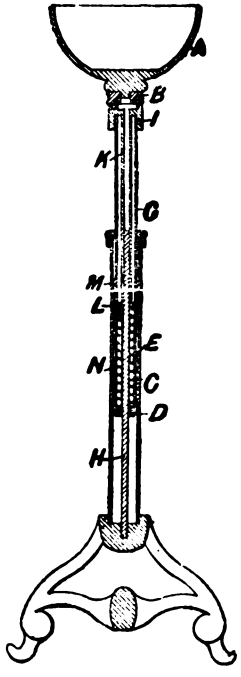

4545. Abel, C. D., [*Siemens & Halske*]. March 26.

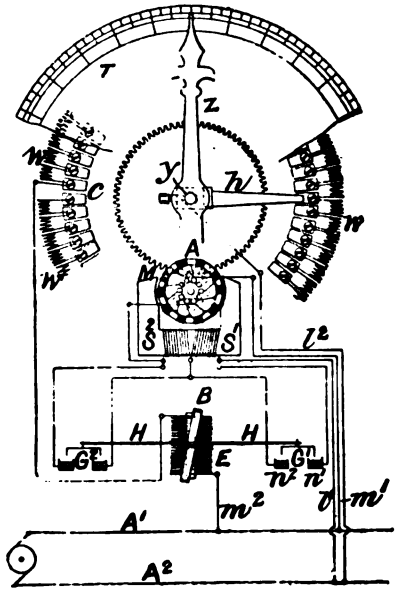

Current meters.—Relates to electrical apparatus for measuring and indicating quantities of any kind, such as the difference of potential between two points of an electric circuit, the velocity of a stream, &c. The Figure shows the invention as applied to the measurement of potential difference. Branching from two mains A^1, A^2 the potential difference between which is to be measured are

Digitized by Google

two circuits. One of these, the regulating-circuit, is formed of conductors l^1, m^1 and the field-magnet coils S^1, S^2 and armature coils A of an electromotor M. The second or measuring circuit m^2, l^2 contains a solenoid E, resistance coils W, and a contact-lever h; a pivoted iron frame B acted upon by the solenoid E carries an arm H provided with forks G^1, G^2 which by the inclination of the frame may be made to dip into one of two pairs of mercury cups, one pair n^1, n^2 of the latter being connected with the coil S^1 and the other pair with the coil S^2. When the potential difference is normal the forked lever is horizontal, the two coils of the field magnets neutralize each other, and no rotation of the armature takes place. If the potential difference alters, one or other of the coils is short-circuited, the motor armature rotates, and this, by means of suitable gearing, results in the movement of the pointer z (which indicates the electromotive force on a scale T) and contact-lever h; in this way resistances are cut out or inserted until the normal strength of current in the measuring-apparatus is again reached. In modifications, the solenoid and pivoted frame may be replaced by two electromagnets and a step-by-step ratchet mechanism substituted for the electromotor.

4614. Loeb, B. March 28.

FIG. 4.

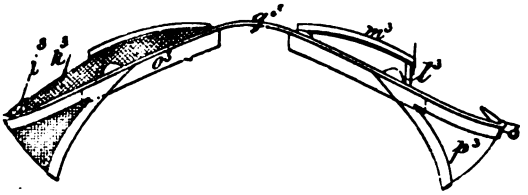

Eye-protectors for firemen &c. The wire-gauze casing k^3 is secured to the frame g^3 by clips i^3. The eye-glasses are fixed in projecting frames m^3, behind which are cooling-chambers o^3. The frame is provided with sponge holders p^3 for cooling the eye. Mica shields may be provided instead of the gauze.

4710. Unge, W. T. March 29.

Telemeters. — Two telescopes A and B, mounted together but having both a common and independent adjustments, and a tablet C, graduated alike on both sides, are used, specially-constructed folding tripod stands being provided for setting up the instruments. The telescope A has cross-lines for sighting, while the telescope B has a reflecting-surface behind the apertures D in its sides to turn its optical axis through about a right-angle. When the telescopes and tablet are set up at either end of a base line at right-angles thereto, the tablet will be seen by reflection in the field of view of the lower telescope; if, now, the telescopes and tablets are interchanged into parallel positions (the lower telescope being turned on its axis through 180°), the tablet will occupy a symmetrical position in the field of view, and by adjustment of the reflecting-surface the reference mark E on the tablet may be made to coincide in both positions with the zero of a scale marked on the glass plate F of the telescope. In using the apparatus the base line is chosen as nearly as possible at right-angles to the line joining one end to the distant object. The telescopes and tablet having been set up at either end and adjusted by the dioptic G of the tablet and dioptic plane H on the telescope frame, the two telescopes are turned together by the screw K until the reference mark E and zero line M of the tablet are brought into coincidence with the zero line on the glass plate F. After this the telescope A is moved independently till the distant object is in view, clamped, and the distant

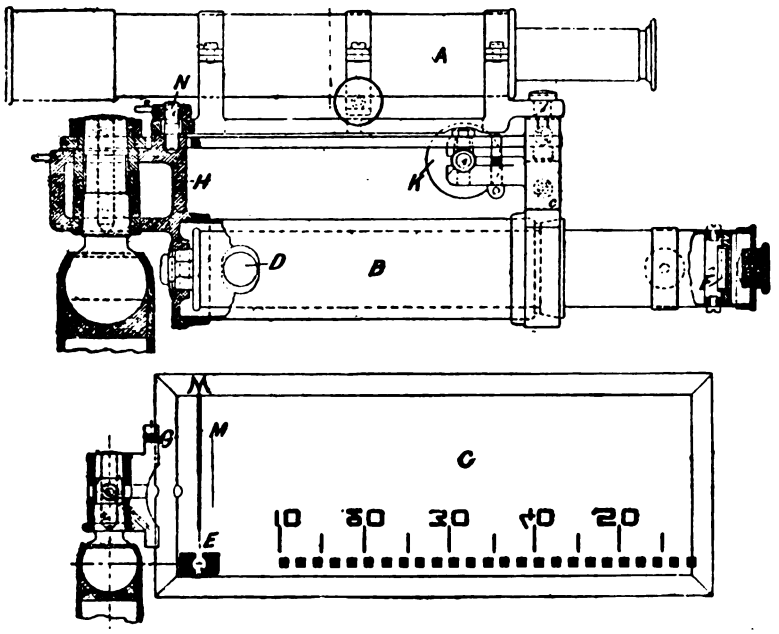

Digitized by Google

object covered by the cross-lines. A note is now made of the portion of the tablet scale cut off between the zero line and a second vertical line on the glass plate, the tablet scale being graduated empirically so as to give readings $\frac{B}{K}$ where B is the base, K a constant depending on the focal length of the instrument, &c. The tablet and telescopes are next interchanged, and in consequence the image of the distant object is displaced in the telescope A; the adjusting-screw K is therefore turned until the image is again covered by the cross-lines, bringing the telescope A into a position making with the former position an angle (α) equal to that subtended by the distant object at the base line. This adjustment causes a displacement of the zero line of the tablet in the telescope B which is read off on the scale of the glass plate F graduated to give a reading K sinα. The product of the two readings gives B sinα, that is, the required distance. Where the base line cannot be taken exactly at right-angles to the line joining the telescope and distant object, the distance found is corrected when necessary by a percentage scale marked along the slot in which works the clamping-device N of the telescope A, this scale showing the reduction necessary for different angles of obliquity. For finding the distance between two distant objects, their distances from the point of observation and the angle they subtend is first observed. Two graduated arms are set to the said angle, and on these arms the distances are laid off to any scale. The distance between the points is then a matter of simple measurement on an equal scale.

Tripod stands.—Each leg of the stand is jointed at the middle. The upper portion is formed of two parallel bars, and the lower part of a single bar which can be folded about the joint and made to lie compactly between the bars of the upper part. The three legs can also be folded upwards so as to project above the head of the stand and form a protection for the pivot of the instrument which is carried by the head.

4768. Ogden, T. D. March 30.

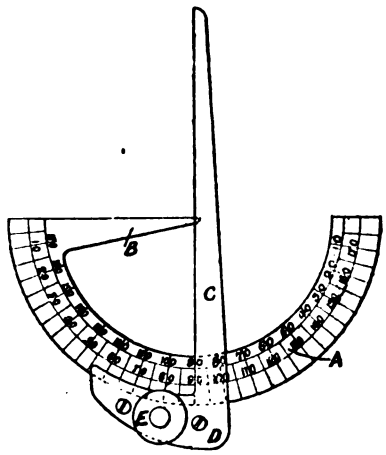

Protractors.—Consists of a circular arc A with a finger B running to the centre, the outer edge being radial. A second adjustable finger C with radial edge is provided, the part D of which has a groove fitting the outside edge of the protractor; this finger may be clamped in any desired position by the screw E, which tightens the edges of the groove on the circular rim. The required angle can then be drawn with the radial edges as rulers. The finger C may terminate at the centre, instead of passing beyond it, for drawing angles within the protractor only.

4804. Coles, W. J. March 31.

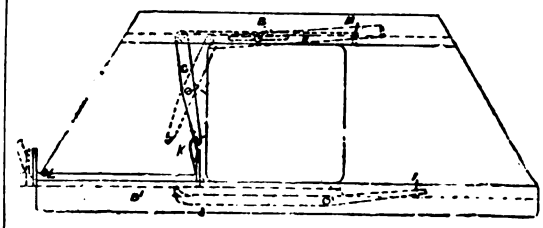

Magic-lanterns, slide-carriers for. The slides are pushed forward in the carrier grooves B, B^1 by a sliding-device L, and are automatically centered by being gripped between the projecting end K and a projection M on the slotted lever E. E is pivoted to a lever C which is directly operated by K. Having centered the first (No. 1) slide, the sliding-device L is drawn back and a new slide (No. 2) introduced and pushed forward as before; after meeting No. 1, it forces it forward until lever E rises so that No. 1 passes under M and falls down the step in the groove B^1, while No. 2 is centered as before. No. 1 now rests on one end I of a lever, the other end J of which is consequently lifted and blocks the groove B^1 so as to prevent No. 3 slide being introduced till the first has been removed. Instead of the sliding-device L, an L-shaped lever pivoted at the upper left-hand corner of the carrier may be used.

5235. Beck, F. W. April 9.

Hygrometers.—A spiral of vegetable fibre, from the seeds of a plant *Erodium gruinum* or "Stork's "bill," is fixed at one end, the other end being constrained to move over a flat spiral scale of three

Digitized by Google

turns. On absorbing moisture the fibre uncoils, the position of the free end indicating the amount of moisture in the air.

5357. Smith, G. April 13.

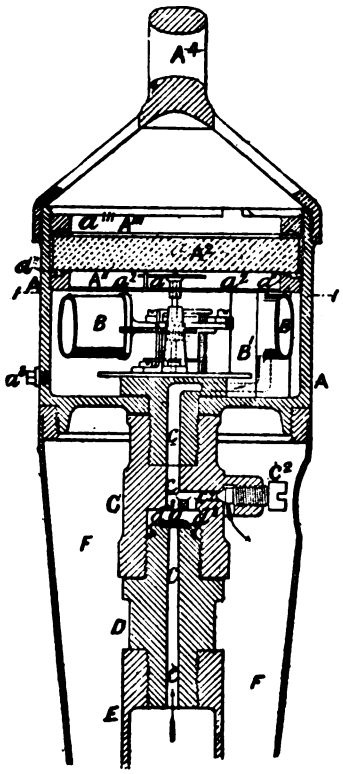

Barometers; sounding-apparatus. — Relates to pressure indicating and recording apparatus for use in ascertaining heights and depths. The apparatus consists essentially of a "Bourdon gauge" having a valve opening one way only, so that the index-finger takes up the position due to the extreme pressure, high or low, to which the instrument is exposed. It is thus applicable for ascertaining altitudes or taking soundings at sea. The Figure shows the arrangement for the latter purpose. The sensitive tube B commencing on the right and terminating on the left is enclosed in a cylindrical casing A, and works the index-finger *a* over the dial a^2 in the usual manner. There may be a second index-finger loose upon the spindle and moved by the finger *a*. The dial is graduated in fathoms corresponding to the pressures, and is visible through a thick glass A^2 which is fitted airtight into the top of the casing by means of india-rubber washers a^{11}, a^{111} and brass screw rings A^{11}, A^{111}. The interior of this case is filled by air at the pressure of the sea level admitted through a hole closed by the screw a^3. The gauge tube communicates with the outer pressure by a passage *c* leading through two connections C, D screwed together to a chamber E open at the bottom to the water, but having a gauze cap to prevent entrance of solid matters. This cylinder is of considerable volume, so that the water may never reach the gauge, the pressure being transmitted to it through the air first occupying the whole chamber. The check valve is placed at the top of the connection D. It consists of a disc *d* carried between two pieces of oil-silk, and fitting a slight depression in the end of the connection D. To ensure its closage, the valve is covered by a thin strip of vulcanized india-rubber d^3, or backed by a spiral spring. In order to restore the gauge to the ordinary pressure after the observation, an inlet c^2, closed by a screw C^2, is provided above the check valve. Instead of this, however, there may be a rod extending to the bottom of the chamber E, by which the check valve can be raised. At the top of the casing A, a suspending-ring A^4 is attached, and from the bottom extends a cone F protecting the parts C, D, E, and carrying, if necessary, sinking-leads. The apparatus for ascertaining heights differs from this only in making the check valve open outwards and placing it at the bottom of the chamber E.

5465. Pound, H. April 14.

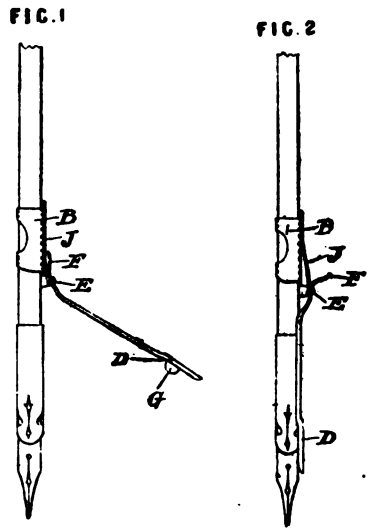

Ruling-pens.—The penholder is provided with means to prevent the nib from coming in contact with the ruler while ruling lines &c. A bent lever D, F is pivoted at E to a movable clip B; a spring J presses on the arm F and tends to force the device into the position shown in Fig. 2, a clip G securing it in that position. On pressing in F, the arm D is raised and the nib may then be dipped into the ink.

Digitized by Google

5470. Kendall, P. F. April 15.

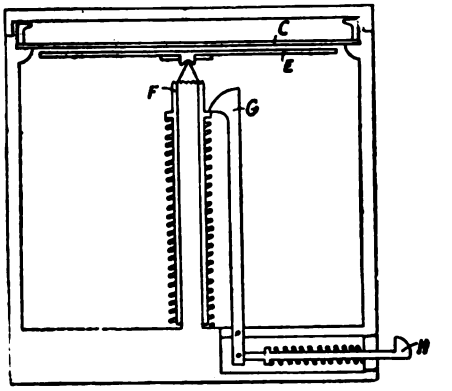

Compasses, magnetic, for use in determining the direction of the dip of rocks in deep bore-holes. The instrument is lowered by a tool on to the core, to which it is attached by cement or a peg. When the needle card E has come to rest, the tool is raised to liberate the spring trigger H G, which releases the notched tube F. The tube F is then forced upwards by the spring surrounding it, and lifts the card E off its pivot and secures it against the glass cover C. The core can then be extracted and its orientation determined.

5900. Price, C. W., and **Corsham, R.** April 22.

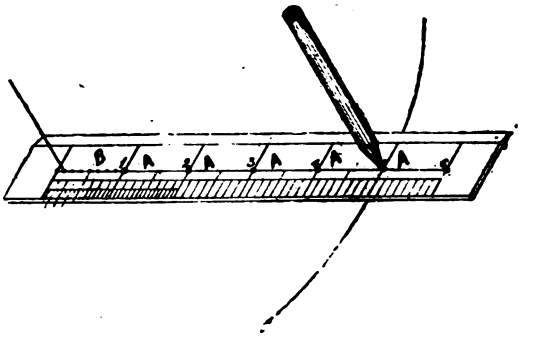

Scales; circle-describing instruments.—The scale is pierced with a series of holes A, A at the inch divisions or otherwise, through which a pencil point may be inserted, and with a series of smaller holes B at the divisions of the first inch for a pin point. By this arrangement circles may be described of any radius less than the length of the scale.

5913. Cumming, W. S., and **Crawford, D.** April 23.

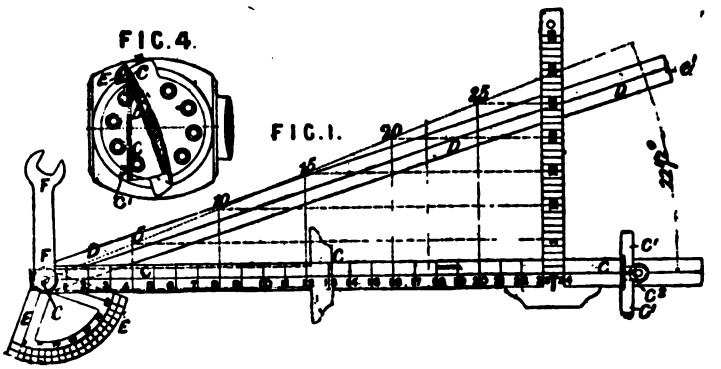

Angle-measuring instruments.—Relates to apparatus for measuring the pitch of screw propellers. An instrument for this purpose is shown in Fig. 1 and the method of using it in Fig. 4. It consists of two thin steel blades C, D, each about two feet long, jointed by a stud *c* with thumb-nut. A centre line is clearly marked on each blade and one, C, is divided on a scale of ¼ inch to the foot to represent the circumferences of circles from one to twenty-four feet in diameter. A T-square, divided on a similar scale into feet, and a protractor E also form part of the instrument. To measure the pitch of a screw the blade C is applied to the turned end of the boss and the axis placed horizontal by means of the spirit level C^1, C^1 secured on the blade C. The angle at any point in the blade is then taken by means of the blades C and D, the former being held vertical while the other is laid across the face or the blade as shown in Fig. 4, and the angle between their centre lines measured by the protractor E. To ascertain the pitch at the diameter at which the angle was measured, the T-square is placed with one edge on the division on C corresponding to that diameter, and the number on the T-square where the centre line D cuts the same edge read off, which gives the pitch. If the pitch is constant it can be found at any diameter in a similar way. If the blades of the screw are

Digitized by Google

bent forward or back, circles are scribed across them at the distances where the angles are to be measured, and the blade D is bent and held to the face of the blades along these lines. A wrench F is provided for tightening the nut holding the blades together. The whole apparatus can be packed in small compass.

5991. Howe, A. C. E., Foord, P., and **Barber, W.** April 25.

Wind vanes, indicators for. A weather cock or wind vane is fixed to a long vertical metal rod or tube, which passes down to the staircase, hall, or any other suitable place. This rod revolves on ball bearings, wheels, or rollers, and carries at its lower end a pointer which moves over a disc marked with the points of the compass. The disc may have protuberances for indicating the direction of the wind in the dark, or to the blind, by touch. The vertical rod may pass down a ventilating-pipe or speaking-tube.

6280. Dobie, T., [*Dobbie, J. G.*]. April 29.

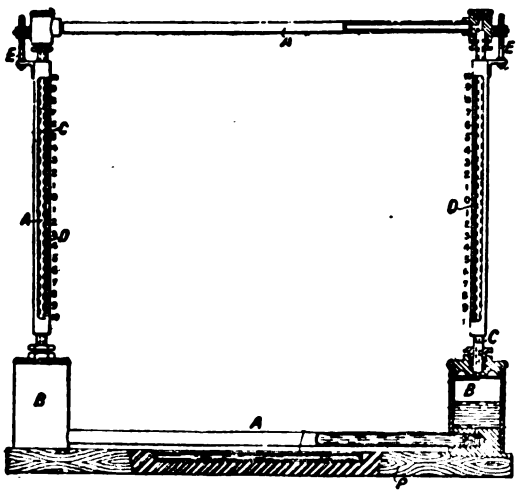

Levels; clinometers.—The difference of level, or angular displacement from the horizontal, of a ship, structure, or object, is measured by observing the difference of level of liquid in two upright tubes C, which are connected together by tubes A at the top and bottom. These upright tubes carry scales D, which are graduated to give the difference in level of the ends of the ship, or of the liquid in the tubes, or in any other suitable manner. The lower tube and the vessel B may contain mercury, and the upright tubes water, spirit, or other liquid. The height in each upright tube stands at zero when the base-plate P is horizontal, the scales being adjustable by screws E. A spirit level is fitted in the sole-plate P.

6377. Shettle, J. May 2. *Amended.*

Rulers.—A ruling-shell, preferably concave at the side nearest the roller and convex at the other, is pivoted by end pieces to a cylindrical roller; the shell rests upon the paper as the cylinder is moved up or down by the fingers.

6383. Bosshardt, F., [*Hahn, A. F.*]. May 2.

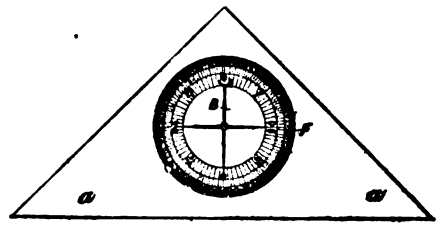

Levels; clinometers.—Relates to a combined level and clinometer for general use. A wooden block *a* carries, in a central cavity covered by a glass F, a free pendulum which keeps an index-finger B always vertical, so that inclinations can be read off on a graduated dial behind it.

6459. Johnson, W. D. May 3.

Tripod stands for surveying-instruments, cameras, &c. The table I has a plate H which screws on to a head having a convex surface f^2, resting on the concave surface A of a fixed plate with lugs *a* to which the legs B are jointed, a central spindle F with thread *f* working in a tube C¹ projecting from the

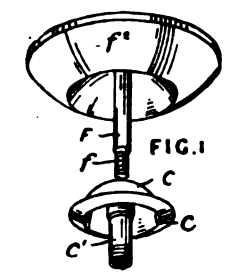

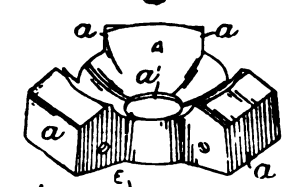

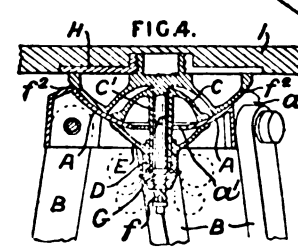

cup C and receiving another cup E. The edges *e*, *c* of the cups E, C are caused to grip the plate A by a winged nut D. When the table is levelled,

Digitized by Google

the aperture a^1 allowing sufficient play for the spindle F and tube C^1, the parts C, E are made to clamp the fixed plate A, and the head, with its spindle F, then gives a horizontal rotary adjustment quite independent of the levelling-arrangement. The spindle F may be clamped by the winged nut G.

6489. Reynolds, F. S., and **Reynolds, A. W.,** [*trading as* Reynolds & Son]. May 3.

Compasses, magnetic, determining errors of. The apparatus is placed on the glass cover of the compass, a brass fitting at the centre of which is passed through one of a series of holes A pierced in the base-plate B along its central line; movable weights C are employed to balance the instrument and get a true level. On the base-plate are mounted a slotted curved sight-vane D, a mirror E, and shades F, F pivoted so that they can be brought into use or turned back as desired. A vertical thread G runs from the point of the sight-vane to the point of the base-plate. To take an observation, the apparatus is turned on its axis, and the mirror so adjusted by the milled heads on its spindle that the observer sees the reflection of the object (through the slot in the sight-vane) cut by the thread G, and brought to bear upon the

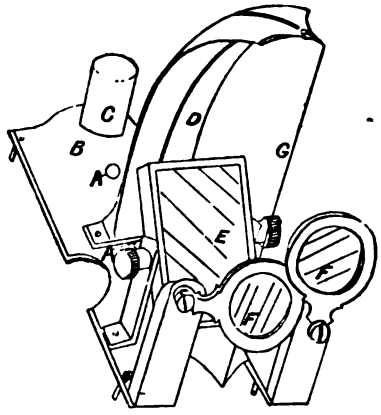

points of the compass card; the magnetic bearing can then be read off at once, to be compared with the known azimuth of the object.

6539. Caulfeild, F. St. G. May 4.

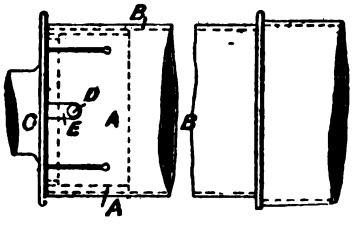

Surveying - instruments; levels. — Consists in attaching the collimating diaphragm, cross-lines, &c. used in surveying and levelling instruments to an independent tube A, which slides into the inner sliding tubing B holding the eye-piece C. The tube is gripped by the slotted mouth of the tube B, and is retained in accurate position by studs D fitting slots E. in B. The tube A, with its attachments, can thus readily be inverted by partially withdrawing it from B till the studs are clear of the slots, and then turning it round.

6730. Himly, M., Leiser, F., and **Bardtholdt, J.** May 8.

Hygroscopes. — Objects endowed with the property of changing their colour when subjected to damp &c. are produced by coating, painting, or impregnating with a solution of magnesium platino-cyanide in any suitable medium. Artificial flowers, cards, or pictures may be thus treated, or the solution may be employed as a sympathetic ink. The objects preserve their original colours until breathed on or otherwise damped, when they will temporarily assume a pink or red colour, or a colour partaking of these tints.

6741. Klif, J. May 7.

Squares for carpenters' and builders' use. The object of the invention is to facilitate the setting-out of mortises and stair-stringers, finding the centre of circles, setting out radial lines, ascertaining the heights of buildings, the lengths of rafters, braces, and the like, &c. The square A, B has its two arms slotted down the centre and graduated with convenient scales. Two scales C, D, also slotted and graduated, are used in combination, the parts being fixed in the required positions by screw studs. In Fig. 1 the instrument is arranged for finding the centre of the plate E, the scale D being fixed so as to bisect the right-angle of the square with one edge, and C at right-angles to D. In Fig. 5 one only of the scales is used, being fixed across the square, as shown, so as to set off stair-stringers. When drawing radial lines of a circle &c., the square is dispensed with, and a slotted cross-piece is fixed by a stud at right-angles to one of the scales. On this cross-piece two slotted arms are fastened at equal distances from one edge of the scale, projecting equally so as to lie against the circumference of the circle. A somewhat similar combination may be used as a T-square.

(*For Drawing see next page.*)

Digitized by Google

6741.

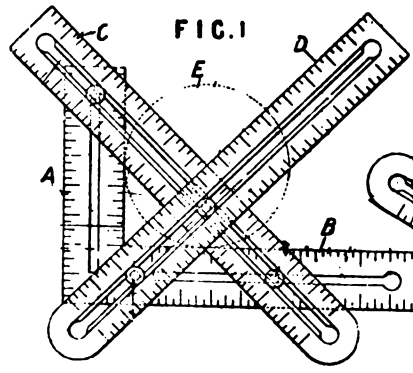

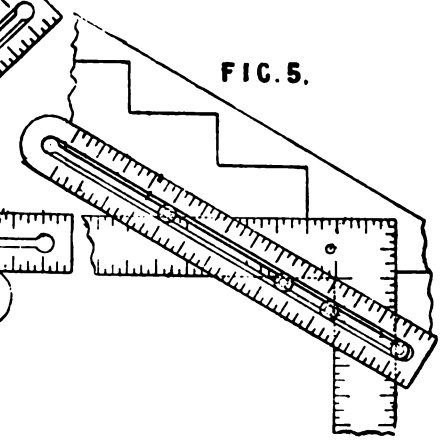

6780. Deans, J. W. May 9.

Tripod stands.—Relates to tubular telescopic stands. The stem is tubular and forms a casing for the feet. The outer tube *a* has at its lower end a boss *b*, internally screw-threaded at b^2 and with its under side b^1 dished. The three feet *d* are jointed by pins c^2 in grooves in a screwed plug *c*, c^1 which fits the boss *b*. When in use, the plug is screwed home, pressing the feet *d* against the dished part b^1 holding them in position; when not in use the feet *d* are turned up and passed, their outer ends first, into the tube *a* and the plug again screwed home.

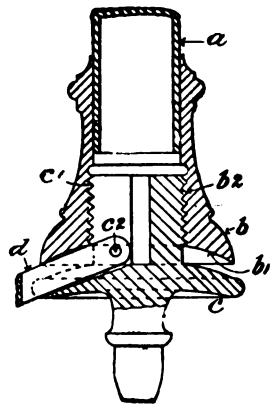

6907. Thompson, W. P., [*Lebret, A. E.*]. May 11. *Drawings to Specification.*

Barometers; hygrometers; weather indicators.—The dials of barometers, hygrometers (of the Saussure type), and other weather-prognosticating instruments are made to turn instead of the index-hands, and are coloured so as to supply the sky to a landscape screen in front. The sky varies in shade according to the weather. The dial has also a series of pictures appropriate to the words "fair," "stormy," &c. The material of the dial is preferably mica or something equally light. Barometer and hygrometer dials of different sizes are sometimes mounted upon the same spindle so that the indications of both appear together and correct each other. The hygrometer dial may be coated with a substance which changes colour according to the humidity of the atmosphere.

7122. Cooper, A. J., and **Wigzell, E. E.** May 16.

Sounding-apparatus.—The Figure shows one form of the part of the apparatus which is let down into the water, the details of other forms being varied, but maintaining the same principle. A Bourdon tube A, as it straightens out under pressure, works the wheel B by means of intermediate gearing C. The teeth of this wheel are insulators, but have a conducting-substance let into them, so that the circuit of a battery on board the ship is made and broken by the contact-spring D as it slips over the teeth, and the depth-registering hand is moved over the dial of the indicator by means

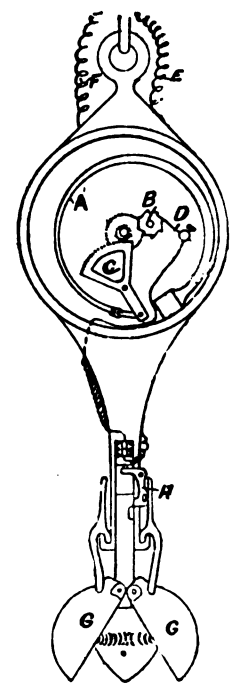

Digitized by Google

of an electric escapement. The conducting-wires E, F are combined with the sounding-line, which is paid out from the ship by a special drum constructed so as to ensure perfect electric contact during the operation. G, G are spring sand grippers for bringing up a sample of the bottom, and a trigger arrangement H is provided which breaks the electric circuit when the grippers close on the instrument striking the bottom; when this takes place, a tablet, with the words "Reached the "bottom" thereon, is raised behind a window in the indicating-dial.

7132. Michel, J. Aug. 16.

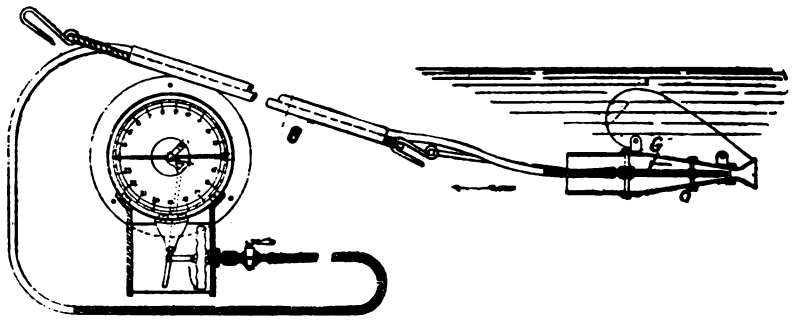

Logs. — Two concentric tubes G, the outer cylindrical in front but conical behind, and the inner of uniform bore, are drawn through the water with the vessel, being either attached to its hull or towed by a line. The inner tube is connected by a flexible tube with an aneroid gauge. The passage of the water through the contracted space between the two tubes creates a partial vacuum in the gauge depending on the speed, which is consequently shown on the dial. The vacuum-producer is prevented from rotating by flat vertical and horizontal fins. When the apparatus is attached to the vessel's side, the effect which the varying pressure (due to greater or less immersion in pitching and rolling) has upon the vacuum is balanced by a second aneroid chamber which communicates with the water at the same place as the vacuum-producer. The diagrams of the two chambers are connected by a link to the centre of which one end of the lever which operates the index-finger is jointed. It is stated that, in order to render the action of the pointer more sensitive, a very small orifice, preferably in a cock, is formed for the admission of air into the vacuum tube.

7182. Walters, W. M. May 17.

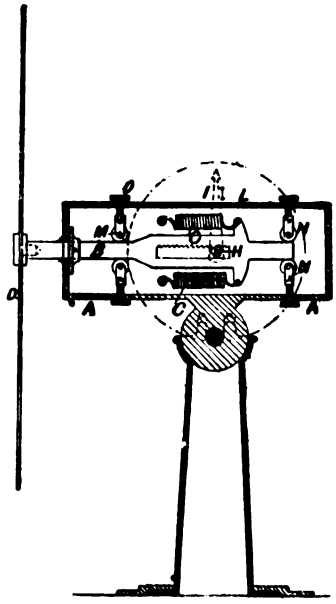

Anemometers. — The pressure of the wind is measured. Within the case A a bar B is mounted so as to be capable of longitudinal motion. The rear of the bar is attached to springs C, and in front it projects from the case and carries a disc D at right-angles. A toothed slot in the centre of the bar engages a pinion H on the arbor of a pointer I which moves over a graduated dial L. This dial has several circles of graduation corresponding with different sized discs D. The case A has universal adjustment in order that the disc D may be presented normally to the wind. As shown, adjustable rollers M, N support the bar B; but in a modified apparatus the rollers are replaced by sectors; or the bar may slide in a tube containing a spring.

7469. Capito, C. A. A., [*Prytz, P. K.*, and *Rung, G. A.*]. May 23.

Logs; current meters.—The tubes p, p^1, with their ends m, m^1 bent respectively against and with the current, are connected to tubes q, q^1 which in turn communicate by branch tubes with pressure gauges I^1, I. Two other branch tubes r, r^1 are provided, uniting into a common pipe t through which air is forced so as to bubble slowly out of the ends of the tubes p, p^1. A difference of pressure is thus set up in the tubes q, q^1, which is shown on the scales of the pressure gauges

Digitized by Google

graduated in any convenient manner according to the application. In a modification, one pipe only may be used and one leg of the mercurial pressure

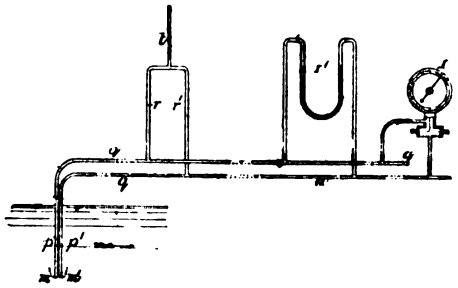

gauge, or one side of the diaphragm of the aneroid, be exposed to the atmospheric pressure. Registering and recording apparatus may be added.

7914. Rood, R. June 1.

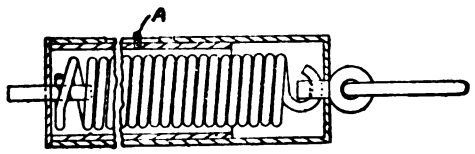

Logs; current meters.—Relates to a log for registering the speed of vessels, which can also be used for measuring the speed of currents. A pair of telescopic tubes, connected internally by a helical or other spring as shown in the Figure, can be fixed at one end aboard the ship, the other end having attached to it a line and plummet which is thrown overboard. The elongation of the tubes caused by the water pressure on the plummet is observed by means of a pointer A moving on a scale of knots or miles on the outer tube, which shows the corresponding speed.

7986. Bailey, M. June 2.

Sounding-apparatus.—Relates to pressure &c. alarms for use with any apparatus working under pressure, such as steam boilers, sounding-apparatus, &c. When the pressure exceeds a given limit a weighted piston or valve is raised so as to complete an electric-alarm circuit, and at the same time to admit steam or other fluid under pressure to a chamber from which it escapes to give an alarm, by breaking a disc of fragile material which covers a hole in the side of the chamber. An alarm is also given in a similar way, when the water level is too high or too low, by a float which raises the above-mentioned piston or valve. In place of this latter alarm a test cock may be placed in the side of the chamber so that by opening it the emission of water or steam determines the liquid level. A vertical section of a convenient form of the apparatus, as applied to a steam boiler, is shown in the Figure. An open tube *a* has screwed on its upper end a flange *z* to which is bolted a flange *i* in such a way that it is electrically insulated from it. Into this second flange *i* is screwed a length of

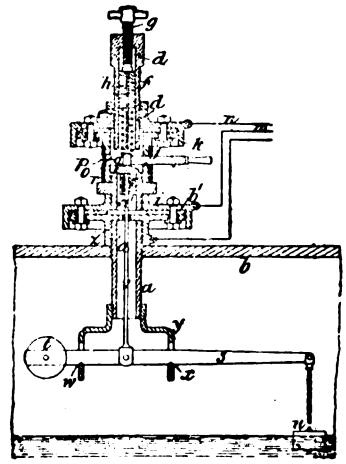

tube *a*, on the upper end of which is seated a valve *c* loaded by a spring *e* which abuts against a piston *f*, of which the position in a tube *d* can be altered by a screw *g* to determine the pressure on the valve. The tube *d* is screwed into a flange *k* bolted to, but insulated from, a flanged tube *j* screwed into the length of tube *a*. In the side of the tube *j* is an opening *q* closed by the cylinder of fragile material *r*. This is surrounded by an outer cylinder *o* in which is a hole *p* which is placed opposite *q* when it is desired that a warning of over-pressure or abnormal water level be given by the escape of steam. Should the pressure become excessive the valve *c* is lifted and comes against a rod *h* to complete an electric circuit through the conductors *m*, *n* leading to a generator and an alarm. At the same time steam is admitted to the chamber above the valve, so that the cylinder *r* over the opening *q* is destroyed, and the escaping steam gives audible and visible warning. The water-level alarm apparatus is shown in the lower part of the Figure. A float *u* depends from a lever *s* which normally rests on the knife edges *w*, *x* and carries a balance weight *t*. When the water level is too high or too low the lever *s* swings about one of the fulcra *w*, *x*, and by means of the rod *v* lifts the valve *c* and sounds the alarm as described above with reference to the high-pressure apparatus. A lever is provided to test the working of the apparatus, and dead weights or weighted levers may be employed to load the valve *c* in place of springs. In some cases the tube *a* descends below the working level, so that on opening a cock the emission of water or steam determines the water level. A pointer working over a scale on the tube *d* may be fitted to the piston *f* to show the load on the valve *c*.

Digitized by Google

8013. Pass, E. de, [*Rougeot, P.*]. June 3.
Drawings to Specification.

Thermometers combined with feeding-bottles. The feeding-bottle is provided with a shoulder through which the thermometer passes, being cemented in position so that the graduations may be read from the outside.

8600. Gordon, J. June 15.

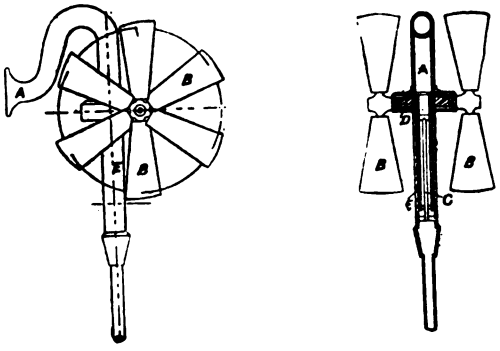

Anemometers.— Relates to improvements on the invention described in Specification No. 8920, A.D. 1886. The instrument consists of an open-mouthed tube leading to spring-controlled bellows which work the indicator &c.; the present invention relates to the method of keeping the mouth of the tube turned to the wind. The end of the open-mouthed tube A carries bearings for the spindle of two vanes B, B and swivels about the pointed rod C. The vane spindle has a worm formed thereon gearing with a worm-wheel D rigidly attached to the fixed part E of the air tube. In case of a change of wind the vanes rotate, and the worm on their spindle, engaging with the fixed worm-wheel, turns the head of the apparatus till the vanes again present their edges to the wind, and, in so doing, move the mouth of the tube to the required direction. A momentary change of wind has no influence on the apparatus, as the gearing requires time to act.

8714. Reynolds, W. J. June 16.

Compasses, magnetic.—The bowl A of a liquid compass is formed from copper or the like by the spinning process in the shape shown with a flange and lip at the top. On the coned bottom is fixed a ferrule F by means of the screw centre G, the head H being covered by a screw cap I with india-rubber cushion J. The rubber acts as a guard, while the compass can be filled through the hole E on removing the ferrule and screw centre. The glass is fitted into the flange of the bowl, and secured by the rings K and L, which are drawn together by screws *a*; on the ring L are the gimbal arms M, while between K and the glass is a packing of tinfoil and india-rubber. To allow of expansion in the liquid by heat, two collapsable vessels R, R are provided with air passages leading into a hollow

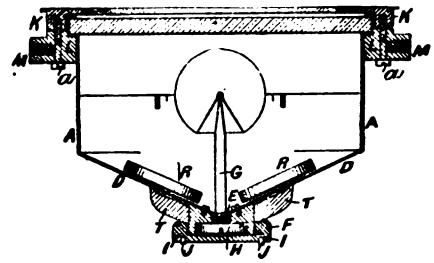

in the balancing weight T. In transparent compasses the coned bottom is dispensed with, the card centre being fixed to a cross-bar, and the bottom glass plate attached in a like manner to the top.

8754. Ready, A. J. June 17.

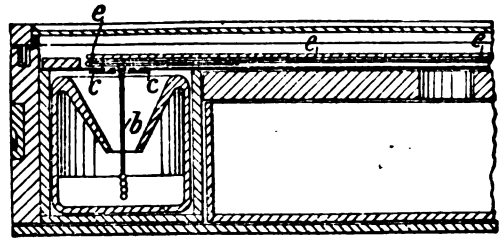

Colours, testing.—A liquid is allowed to travel along a bibulous strip under capillary action. The liquid is drawn up from a reservoir by a wick *b* hanging from a button *c*. The absorbent strip is laid along a lath *e* and turned underneath it at the end so as to touch the wick on the button. In modifications, the liquid rises up a vertical strip or radiates from a centre. Coloured liquids may be compared as they advance along parallel strips of paper.

8985. Stanley, W. F. June 24.

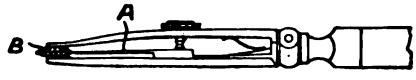

Dotting-pens.—Consists in employing an intermediate nib A (or two or more intermediate nibs for broad dotted lines) to increase the capillary attraction for the ink, and ensure a better supply to the rowel wheel B.

Digitized by Google

8998. Cross, A. K. June 24.

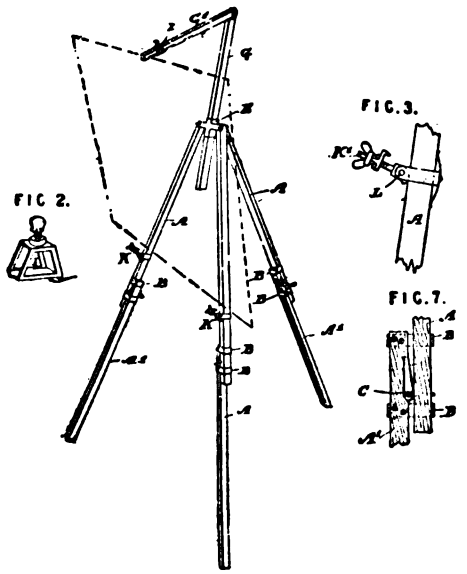

Tripod stands for easels. Three legs A are pivoted to a casting E through which passes a rod G secured by a thumb-screw. This rod is jointed in the middle, the part G^1 being notched and provided with a sliding piece I, Fig. 2, for securing a drawing-board or canvas shown in dotted lines. The legs A are in two parts, the lower A^1 carrying two bands B, B in which the upper parts slide; they are secured or released by turning a pin C, oval in section, Fig. 7. The canvas is supported on pieces K, Fig. 3, which are adjustable and secured by the pins K^1. Each pin is pivoted as shown at L; hence, the heavier the canvas, the tighter the grip.

9202. Thompson, W. P., [*Taylor, C. W.*]. June 28.

Eyeglasses.—To prevent undue strain when folded, the connecting-spring B of a pince-nez is knuckle-jointed in the middle, the hinge-pin C being parallel to the focal axis of the lenses.

9454. Stanley, W. F. July 4.

Spectacles.—The object is to obtain strength of frame while making the upper edge invisible. For this purpose the upper half of the eye-frame is plain cylindrical or semi-cylindrical wire sunk in the glass, the lower half being of the usual hollow section frame wire. Or the arrangement may be inverted.

9487. Goodrich, A. S., and **Moore, J. J.** July 5.

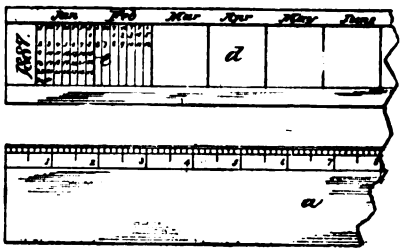

Rulers combined with calendars. On the lower face of the graduated ruler *a* is formed a shallow channel *d* with grooves at the side, into which a cardboard calendar strip *e* is slipped, so that it may be withdrawn for changing when necessary; the names of the months may be marked on the ruler itself.

9520. Weeksler, B., and **Becker, M. I.** July 5. *Drawings to Specification.*

Compasses, magnetic, combined with calendars. Relates to rotary dial apparatus for determining the day of the week on any date, which may be combined with a compass or other article.

9801. Boult, A. J., [*Fischer, J. M.*]. July 12.

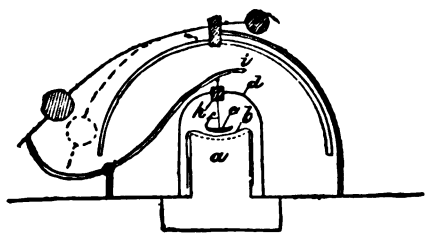

Thermometers.—A flexible air-vessel *a*, with concave or undulating top, is covered by a thin metal or (for low temperatures) vulcanite casing *b*, which,

Digitized by Google

as the air expands under an increasing temperature, raises the disc *e*. To *e* is attached a rod *f* passing through a guide *h* in the bell cover *d*, and so operating the lever *i*, which is arranged to release the hammer of an alarm bell at a certain desired temperature. In a modification, the movement of the rod *f* may complete the circuit of an electric alarm bell.

9814. Douglas-Hamilton, A. H. July 12.

Stereoscopes; telescopes.—In order to adjust the distance between the optic axes in stereoscopes and binocular telescopes, one or both the tubes are mounted eccentrically in rings, which can be rotated in their bearings. Instead of the whole tube being thus mounted, the eye-piece and object glass may each be mounted eccentrically, so that they can be turned separately.

9900. Dale, H. F. July 14.

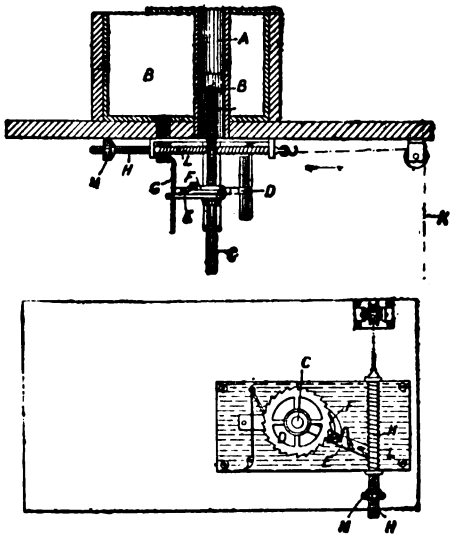

Microtomes.—The substance to be sliced is pushed up from the vertical tube A, surrounded by the freezing-chamber B, by the screw spindle C on which is fixed a ratchet-wheel D. An arm E, loose on this spindle, carries the actuating-pawl F, and is vibrated by a depending wire G on the reciprocating rod H, worked by a treadle through the connected cord K. The rod H is controlled in its motion by the coiled spring, and its play is limited by the adjustable nut M, so that for each stroke of the treadle the screw may be raised the exact distance required. By this arrangement both hands are left free to manipulate the cutting-razor &c.

10,502. Game, J. A., and **Aflalo, M.** July 28. *Drawings to Specification.*

Rulers.—According to the Provisional Specification rulers are formed with an envelope or sheath of absorbent material to act as a blotting-appliance.

10,527. Chamberlin, F., [*Chamberlin, H.*]. July 29. *Drawings to Specification.*

Sounding-apparatus.—Relates to means for ascertaining the depth of water by means of sound. In an open-bottomed chamber near the bow some audible signal is made by blowing a whistle, ringing a bell, &c. The time elapsing between this signal and its reflection from the bottom, as heard in a bell-mouthed tube extending to the keel near the stern, is a measure of the depth.

10,595. Hicks, J. J. July 30.

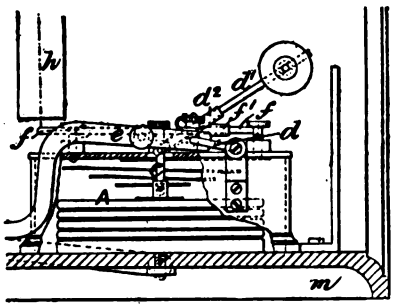

Anemometers.—The pressure chamber A is constructed in bellows fashion of a series of corrugated discs united at the rims and at central holes. A crank *d* carrying an adjustable loaded lever d^1 in a sleeve d^2 receives the movements of the pressure chamber through a link *c* jointed to d^1 and imparts them through arms *e* and *f* to a recording-pencil and an index-finger respectively. The record is made on a drum divided into hours only, and is read by a separate scale. The index is actuated by a cord *h* from the arm *f* in opposition to a spiral spring. The arm *f* is adjustable in a sleeve f^1 like the lever d^1. The frame and case *m* is made of cast iron so as not to warp. The corrugated bellows chamber may be used with any other recording and indicating mechanism.

10,712. Mileson, H. G. Aug. 4.

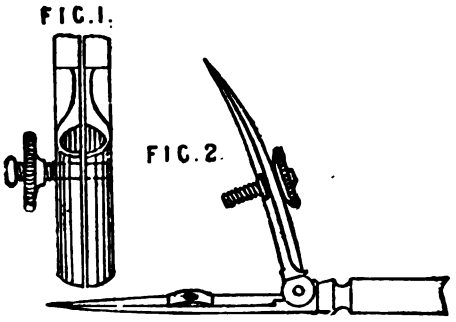

Mathematical drawing-instruments.—Relates to means for preventing the loss of adjusting nuts and screws. In Fig. 1 the end of a stud is shown enlarged, and Fig. 2 shows a screw with a small

Digitized by Google

collar secured to it, inside one limb of a ruling-pen, to prevent its withdrawal and to dispense with a spring for opening the pen. The above devices may be modified to adapt them to screws or studs for various purposes.

10,744. Eyre, G. E. B., and **Spottiswoode, W. H.** Aug. 4.

Parallel rulers.—The connecting links are internal and so hidden when the rule is closed; the rule may be graduated for use as a scale or measure suitable for draughtsmen, architects, engineers, &c.

10,841. Berry, J. L. Aug. 8.

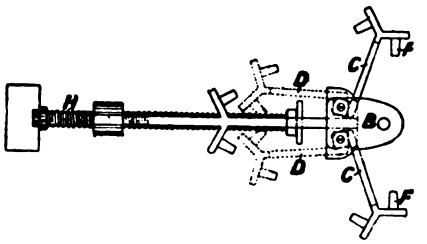

Tripod stands.—Relates to folding tripod tops, which may be combined with clamps, for use with photographic cameras. Two of the arms C, C of the tripod top are hinged at the centre and fold up into the position D, D. The usual studs F, F are furnished for attaching the tripod legs. To form a clamp, one of the limbs C of the top is prolonged and bent down, the end forming a nut for the screw H.

11,032. Reid, J. Aug. 12.

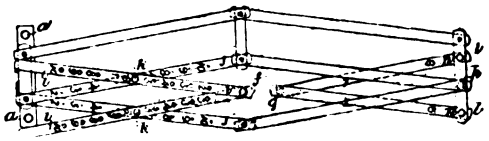

Pantographs.—A link parallelogram is pivoted at one angle to a hinge, which may be secured to a drawing-board by screws *a*, and is provided at the opposite angle with a socket *h* to carry a copying-pencil or tracing-point. An interior parallelogram, formed with the sides *j*, *j* of the former by two links *i*, *i*, carries a socket *f* for a point or pencil. The bars *i*, *j* are pierced with holes so that the relative movements of *f* and *h* may be varied by using different sets of corresponding holes for the joint pins *k*. The numbers marked against the holes show the scale of inches to the foot (reduction or enlargement) which will be obtained by using the tracing-point in *h* and copying-pencil in *f* or *vice versâ*. For making an equal-sized copy a holder *g* is used instead of the holder *f*. It is carried at the junction of rods *n* which are fastened at *l* to a cross-strip that is kept parallel to itself by links parallel to two sides of the parallelogram. Heavy cylinders are provided for weighting the pencil.

11,317. Simpson, W. S. Aug. 18. *Drawings to Specification.*

Kaleidoscopes; stereoscopes.—Relates to a coin-freed apparatus for exhibiting kaleidoscopic or stereoscopic effects. The coin falls on a tipping-lever and completes an electric circuit through a lamp or turns on a gas light in order to illuminate the designs, views, &c.

11,320. Hartmann, G. Aug. 19. [*Complete Specification but no Letters Patent.*]

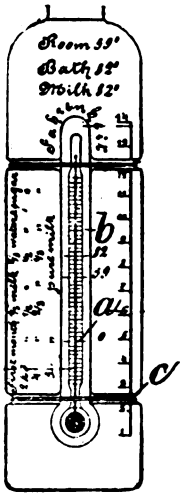

Thermometers combined with feeding-bottles. A thermometer *a* is attached to the feeding-bottle, preferably in a groove *b*, and a scale may be attached by the elastic &c. bands *c*. Various instructions and a scale for quantities may also be impressed on the bottle as shown.

11,362. Lake, H. H., [*Aguettant, B. L.*]. Aug. 19.

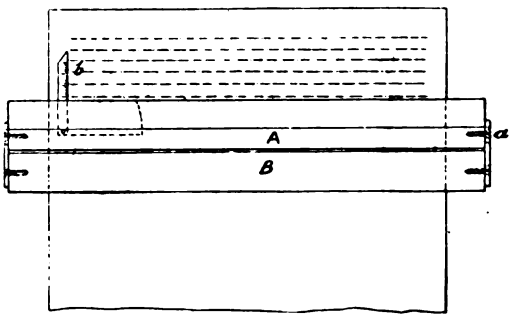

Parallel rulers.—The straight-edge A is attached by links *a* at the ends to a roller B, and has a pivoted gauge *b* to measure the distances between the lines.

Digitized by Google

11,578. Shepheard, G., and **Holman, H. F.** Aug. 25.

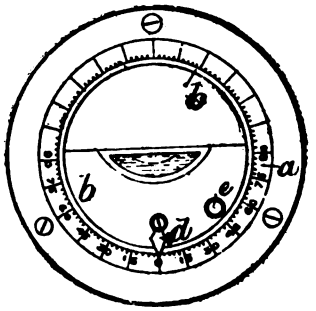

Clinometers; levels.—Relates to sighting-arrangements for guns, applicable for determining slopes &c. A graduated ring *a* is fixed by a plate to the breech of the gun &c., and carries a movable ring *b* which supports a spirit level. The ring *b* is provided with a pointer *d* and handle *e*. The ring *b* is turned for any desired elevation, and the breech lowered until the spirit level is horizontal. The apparatus may be fitted to a field carriage to determine the slope of the ground.

11,602. Walker, H. C., and **Heffer, H. C.** Aug. 26.

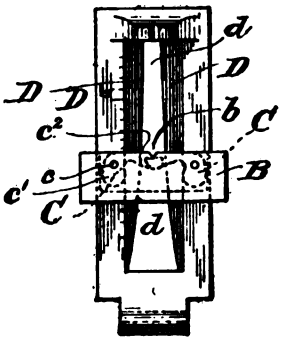

Range-finders in connection with gun sights. The back sight is provided with two levers C pivoted at *c* and weighted at *c*', of which the horizontal arms *c* block the aperture *b* in the slide B when the back sight is not vertical. D, D are plates attached to the back of the leaf and with a tapering space *d* between them. By holding the leaf horizontal the distance of a man or other object of known height may be inferred by observing his apparent height between the plates D, D. The range-finding plates may be fitted separate from the back sight, and may have a magnifying-glass.

11,621. Simpson, W. S., and **Oliver, W. S.** Aug. 26.

Kaleidoscopes.—The apparatus is intended for displaying kaleidoscopic effects, and may be coin-freed or not, as desired; it may also be combined, if desired, with apparatus for the automatic sale of goods. The Figure shows an arrangement of the mechanism to be worked by hand. The rotary motion is given by a pinion D on the spindle E

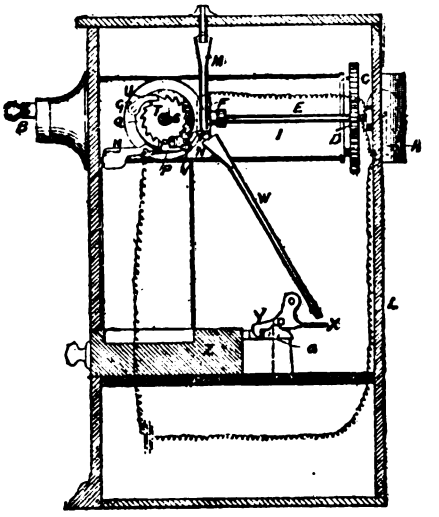

geared with a toothed wheel C on the rotating part; E is geared with the driving-shaft S by means of bevel-wheels F, G. When coin mechanism is not used, the body of the kaleidoscope is pivoted on a stand so as to be adjustable at any required angle for getting the best light, but in the arrangement shown in the Figure the disc Q on the driving-shaft is normally locked by a tooth P on the coin-lever N. On the insertion of a coin, which falls into the pivoted shoot M, the lever N is depressed and the shaft S may be rotated until the projection V tilts the shoot M and discharges the coin. So long as the coin remains in the shoot M the circuit of an electric lamp H for displaying the kaleidoscopic effects is completed. After the coin has passed down the shoot W it may be utilized to release the catch X, Y of a goods-delivering drawer Z; it is finally discharged by the cam *a* further tilting the catch X, Y as the drawer is pulled out. In a modification, the kaleidoscope may be rotated by clockwork, the movement of the coin-lever being utilized to free a locked wheel in the clock train, and also to complete an electric circuit; the coin is in this case discharged by the further tilting of the coin lever &c. under the action of a snail-wheel. Preferably the eye-piece B of the kaleidoscope is binocular, prisms being employed to split the image by reflection. In the Provisional Specification it is stated that the kaleidoscope may be turned by springs, clockwork, or electric power, and that views or advertisements may be exhibited round the edge of the field.

Digitized by Google

11,808. Thompson, W. P., [*Draper, D.*]. Aug. 31.

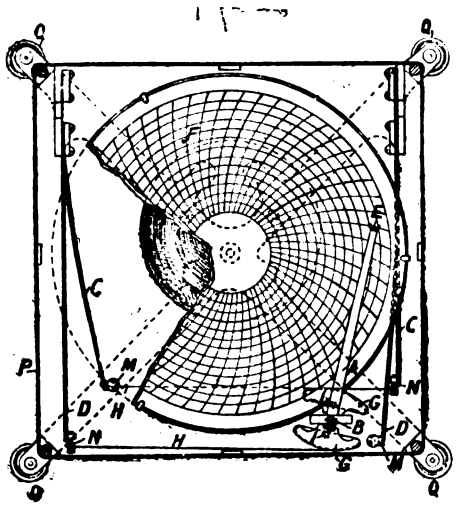

Thermometers.—The indications are registered on a revolving disc. An arm A, centered at B, is turned by the flexions of two pairs of bimetallic strips C, D fixed at one end. The arm carries a pen E which marks a card F rotated by clockwork. The turning-pin of the arm carries two segments G, round which are taken fine wires H connecting the separate strips of each pair. To prevent slipping upon the segments the wires are wrapped upon pins I thereon. The leverage of the strips is adjusted by screws N, and the tension of the wires by pins M. The card shows temperature by concentric circles, and weeks and days by radial lines curved to the path of the pen E. The whole is enclosed in a flat perforated case P resting upon spiral springs Q.

11,964. Heath, G. W., [*Walters, W. M.*, partly]. Sept. 3.

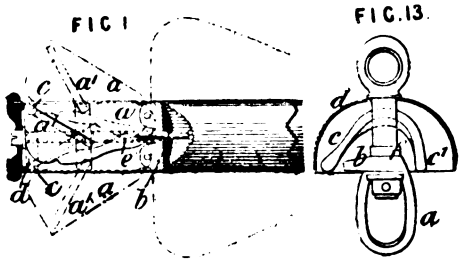

Logs.—The pitch of the helical vanes of the rotator is arranged to give a falsely high rate of speed, but two radial vanes *a*, *a*, Fig. 1, pivoted to the partition *b* are provided in addition which may be adjusted to project to any required extent and so reduce the speed so far as is necessary. To admit of the adjustment, the blades are slotted at a^1, a^1 and receive pins *c*, *c*, projecting from a nut *d*, travelling on a screw *e*. In some cases the slots a^1 are arranged at the opposite end of the vanes to that shown; or the nut *d* may be fixed on a toothed rack moved by a pinion and handle. Again, the vanes may be adjusted by a scroll disc, or they may be linked to the nut *d*, or otherwise capable of being adjusted. In towing-logs an alarm, Fig. 13, is arranged to indicate any jamming or irregular movement of the rotator relative to the towing-rope. Such obstruction will cause the towing-rope to rotate, and consequently the shackle *a* to which it is attached on board. The cam *b* turns with the shackle against a spring *f* and, striking the end c^1 of the hammer *c*, sounds the bell *d*.

11,985. Harcourt, A. G. V. Sept. 3.

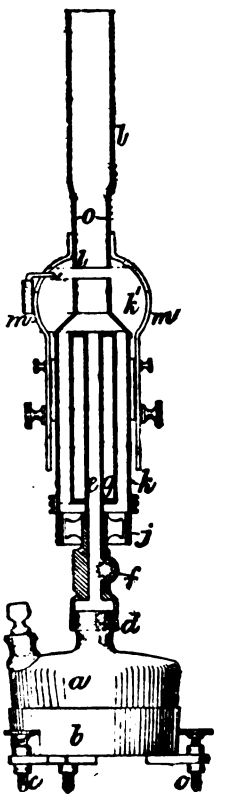

Photometers, standard lamps for. The lamp consists of a vessel *a*, similar to that employed in a spirit lamp, placed in a stand *b* with levelling-screws *c*, a plumb-line being used to obtain a correct vertical. A cap *d* fitted with an ordinary wick-raising appliance *f* carries the wick-tube *e* which is surrounded by a jacket *g* through which a steady supply of warm air passes, causing a very stable flame. A gallery *j* mounted on the cap *d* supports the chimney *k*, which is contracted at k^1 to a mean between the diameters of the tubes *e* and *g*. An extension *l* of the chimney, widening at its upper end, is connected to the part *k* by metal straps *m*, and the opening between the parts *l*, *k* can be adjusted by screws or by gauging-collars of various sizes. When the top of the flame is visible in the slot *o* of the extension *l*, a standard light of one half, one, one and half, &c. candles is given off from the lamp according to the adjustment of the opening between *l* and *k*. The oil burnt is preferably "Pentane," which volatilizes and burns with a bright steady flame without charring the wick.

Digitized by Google

12,337. Bloor, T. Sept. 12.

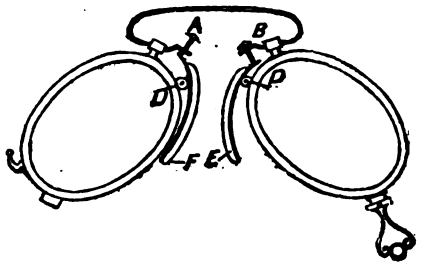

Eyeglasses.—The nose-pieces E, F are pivoted at D so that the distance between them can be varied by screws A, B applied to their upper ends.

12,601. Leportier, T. Sept. 17.

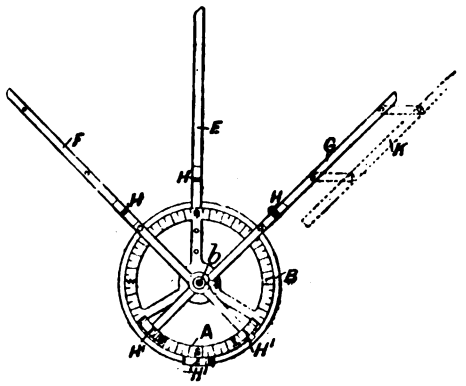

Angle-measuring instruments; bearings, instruments for determining; course correctors.—Relates to portable apparatus for measuring angles, specially adapted for laying down on a chart a vessel's true position at sea. The apparatus is gimbal-mounted and provided with a heavy weight to steady it; it consists of a graduated ring A or equivalent turning on a central pivot *b* over a bed-plate B. To the ring A is fixed an arm E, and sights H, H¹ are carried by the arm and back plate or ring. On the central pivot also work two arms F, G with corresponding sights. When three known points are in sight, the vessel's position can be determined by sighting the three points with the arms E, F, G, then transferring the instrument to the chart and placing the arms to cut the known points. The centre of the instrument, which may be marked by a style pushed through the hollow spindle *b*, then shows the position of the ship. Where only two known points are visible, the central arm E is set to the ship's head, and then placed on the chart lying along the ship's course. A parallel ruler K is fitted to the arm G to facilitate the moving of the instrument so as to keep the arm E parallel to itself. Shadow pins may also be fitted to the pivot *b*, and a sight H on one of the arms F or G for correcting the course &c.

12,668. Lyall, E. Sept. 19.

Surveying - instruments. — Relates to extensible linear measures, such, for example, as a levelling-staff, the object being to make the extended scale read continuously from the fixed portion when the staff is only partly extended. The fixed portion of the scale is marked on the part *a*, which has a groove *c* at the back and side grooves *d* to allow of a part *b* sliding freely; any equivalent for the grooves may be employed. The part *b* carries two rollers *g*, *g*, one at each end, round which passes a length of measuring-tape *f*, or an equivalent, fixed at one point to the top of the part *a*; on this tape the extended scale is measured, and will read continuously from the end of the scale on *a* whatever the position of the extended part *b*. A binding-screw or the like is provided to fix the part *b* in any required position.

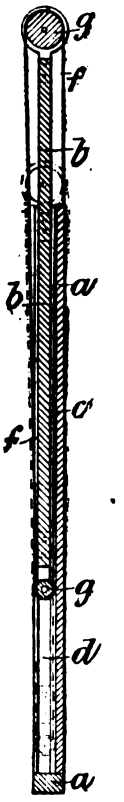

12,880. Reynolds, W. J. Sept. 22.

Compasses, magnetic.—Relates to a method of producing metal plates for compass cards, or other purposes. A disc of glass is painted to correspond with a compass card, and a raised edge of putty is applied all round. Hydrofluoric acid is then poured in to eat away the portions not painted. The glass is then washed and the paint removed, and the raised surface is roughened. This is coated with blacklead, and the plate introduced in a bath of sulphate of copper. The plate is then coated by electrolysis with the required thickness of copper, and a plate of copper suitable for a compass dial is thus produced.

12,963. Siegert, A., and Dürr, W. Sept. 24.

Specific gravity estimating apparatus for measuring the density of gases. Consists of a balanced beam

Digitized by Google

carrying at one end a large sealed globe, and at the other end a U tube containing mercury &c. This is enclosed in a case which is filled with the gas to be tested. The position of equilibrium of a pointer carried by the globe indicates the density on a graduated arc. The inner limb of the U tube has its end closed and contains air; the expansion and contraction of this air render the readings independent of temperature and pressure.

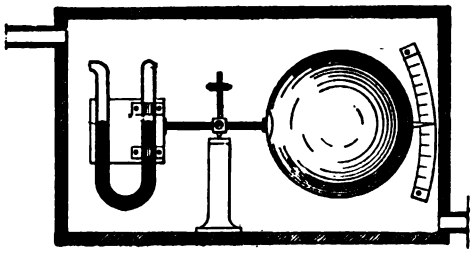

12,964. Boult, A. J., [*Pereles, F.*, and *Liska, F.*]. Sept. 24.

Parallel rulers.—The straight-edge A is connected by metal strips D, bent into a semicircular form, with a strong wire E, which is bent up at the middle so as to form a tang for securing the handle G. The roller B is centered loosely on the ends of the wire E, and may be covered by some ink-absorbent material, such as several thicknesses of blotting-paper. Slight modifications in details of construction may be made.

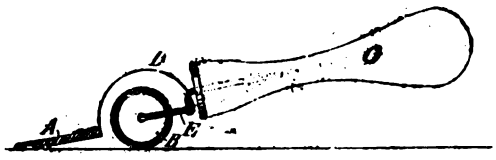

13,186. Elliot, J. M. Sept. 29.

Lenses, fittings for. Relates to diaphragms and shutters for photographic and other lenses. This apparatus consists generally of a pair of reciprocating perforated slides with actuating, regulating, retaining, and releasing mechanism, which may be used as a shutter for long or rapid exposures, or as an adjustable lens diaphragm. The shutter may work in the diaphragm slit or be placed in front of the lens. The two reciprocating slides B and C are actuated by a pin e which is fixed on a transverse moving slide E^1 and slides freely in slots inclined in opposite directions in the slides. A crank-pin e^1 on the disc f works in a curved slot e^2, e^{11} in the transverse slide E^1. The disc f is actuated by a spiral spring connected to its axle f^2. The regulating-mechanism consists of two parts, one for regulating the size of the maximum aperture of the shutter, and the other for regulating the length of the exposure. The maximum size of the aperture is determined by the stroke of the transverse slide E^1, and this can be regulated by adjusting the position of the axle f^2 of the crank disc, which is carried on a transverse slide. The length of the exposure is regulated by giving more or less tension to the spiral actuating-spring. For long exposures a stop pawl h can be adjusted by an eccentric g^1 to arrest the crank disc by the stop f^3. The retaining and releasing mechanism consists of a pawl g gearing into the ratchet teeth on the edge of the crank disc, and actuated by the pneumatic piston H^3 and slotted spring lever, which fits on the pin g^2 on one end of g. In a modification, there are several slides overlapping and moved simultaneously to different extents by suitably-inclined slots.

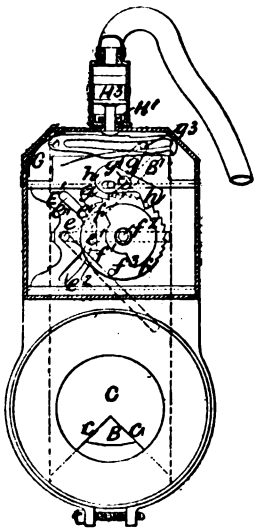

13,313. Boorman, J. A. Oct. 1.

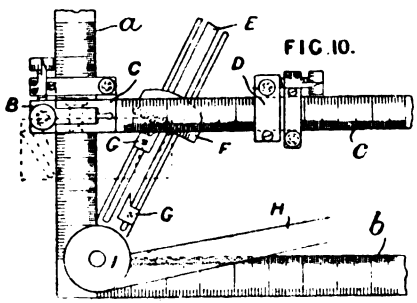

FIG. 10.

Angle-measuring instruments for ascertaining the angle of a line passing through a point at a given distance from vertical and horizontal planes, and

Digitized by Google

especially for use in making bevel and mitre wheels. The Figure shows an instrument for getting the angles of bevel-wheels for shafts at right-angles and the sectional dimensions of their teeth. The arms *a*, *b* of a quadrant are graduated to any suitable scale. A reading-slide B on the arm *a* carries a graduated straight-edge *c* parallel to the arm *b*, and this straight-edge carries a reading-slide D. Both slides are provided with vernier screws. There are two pivoted radial arms E and H, the former lying beneath the quadrant arc and reading by its central line, and the latter lying above the arc and reading by one edge. Upon the arm E are two coursers G with pointers coincident with the central line, and a slide F with graduations on its inner edge which is at right-angles to the central arm. These graduations give the faces and flanks, each graduation corresponding to an eighth of an inch in pitch. The slides C, D are set to the radii of the wheels obtained from the ordinary tables, using eighth pitches. The arm E is turned till one of the coursers G fits in the angle between C and D, when it is fixed by the milled headed screw I. The arm then reads the angles of the pitch cones. With the slide F and the arm H are determined the angles of the top of the teeth and the bottom of the interdental spaces. By the slide F also and the straight-edge *c* the greatest diameter of the blank is ascertained.

13,332. Decoudun, J. Oct. 1.

Photometers for photographic use. Varyingly translucent plates are brought in front of the image on the ground-glass plate of the camera, and the image, which is at first simply blurred, gradually becomes a uniform dark tint; the intensity of the light is then estimated by the plate used. The Figure shows a method of carrying the invention into effect, which is simply given as an example. An opaque disc A has small holes *a*, *a*, *a* and larger holes *b* perforated in it radially. The disc is then covered by segments B of gradually-decreasing translucency. The disc A can be rotated close to the ground-glass plate by the thumb-piece C, only one line of perforations being visible at a time through slits in the back and front of the case D. When the light through the small holes is nearly obscured, while that in the larger is still visible, the intensity is read off by a reference number or letter on the disc showing through an aperture in the back of the case D.

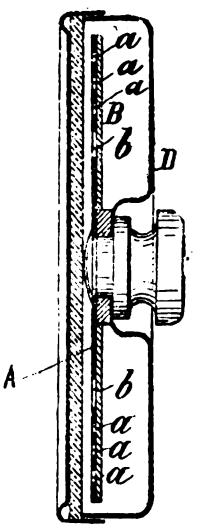

14,169. Hicks, J. J. Oct. 18.

Specific gravity estimating apparatus. — Consists in fixing wings or projections *e* to the weighting-bulb *b* or weight of hydrometers and saccharometers for the purpose of preventing rotation in the fluid. The projections also act as feet upon which the instrument can stand when removed from the fluid. By lengthening the projections as indicated in dotted lines, they serve to protect the floating bulb *a* from injury when the hydrometer &c. is laid on its side.

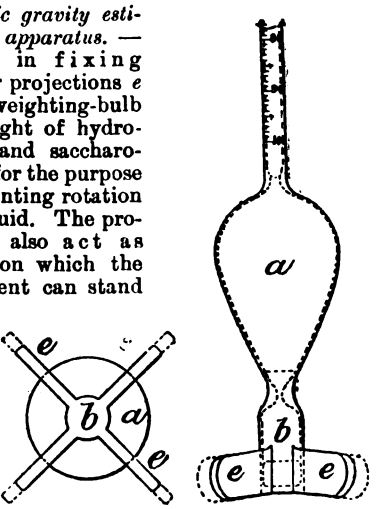

14,171. Steward, J. H. Oct. 19.

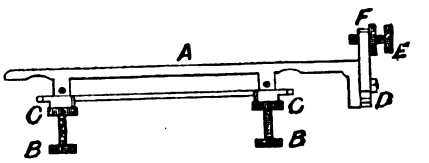

Magic-lanterns.—A slide-runner A is mounted adjustably on the stage by means of screws B, B and lock-nuts C, C. On the stage or the runner an adjustable stop E is pivoted with a lock-nut F for fixing it in position; when panoramic slides are used the stop may be turned out of the way on its pivot D. For existing lanterns the adjustments are mounted on a framework attached to the ordinary slide stage by screws or the like.

14,216. Crampton, P. J. R. Oct. 19.

Levels.—Relates to electric apparatus for automatically discharging a ship's guns at the instant that the ship is on an even keel. Fig. 1 shows a part-sectional elevation, and Fig. 2 a plan of one form of the apparatus. *a* is a cross-frame, carrying the four contact-points b^1, b^2, b^3, b^4, of which the points b^1, b^3 are connected by the wire *c* and the points b^2, b^4 are connected by the wire *d*. The frame *a* is kept parallel with the plane of the horizon by plungers *i*, floating on mercury in the vessel *k*, which is in the form of a tubular cross. Above

Digitized by Google

the frame a hang the four arms e^1, e^2, e^3, e^4, with platinum points corresponding to b^1, b^2, b^3, b^4. The arms e^1, e^2, e^3, e^4 are pivoted to the centre piece f, and e^1, e^2 have their points connected by the wire g,

FIG. 1

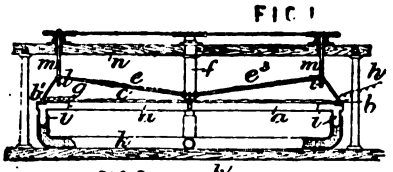

FIG. 2

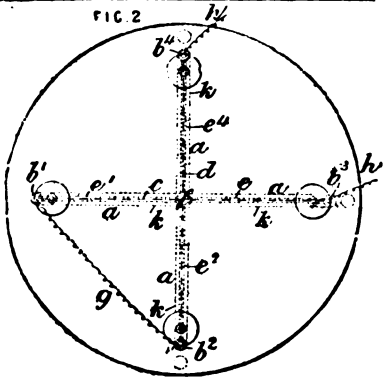

while the points on the arms e^3, e^4 are connected to the two poles of the battery by the wires h, h. The circuit is therefore not closed until the four points on the arms e^1, e^2, e^3, e^4 simultaneously touch the four points b^1, b^2, b^3, b^4, *i.e.*, until the ship is on an even keel. In one modification, the tubular cross is replaced by two separate tubes crossing each other, and in another modification only two points are used and the lower contacts are made by the mercury.

14,424. Cook, H. W. Oct. 24.

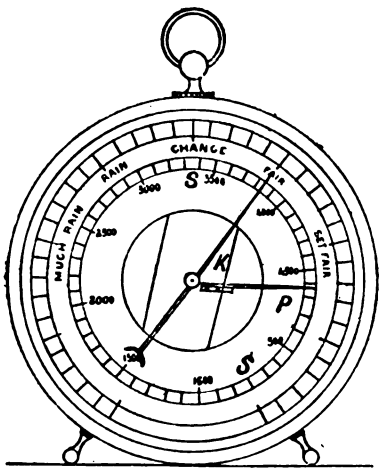

Barometers.—Consists in making the barometer K to revolve within its case, a scale S of altitudes being provided in addition to the ordinary scale. If the pointer P, which is rigidly attached to the revolving part, be brought to the level at which it is known the instrument is situated, the index will show the pressure corrected to sea level; and *vice versâ*, if the index be set, at an unknown altitude to the sea-level position, the altitude is shown by the pointer P. A scale to show actual pressures may also be employed, and if desired the pointer P and scale S may be placed on the cylindrical surface of the case.

14,509. Callendar, H. L. Oct. 25.

FIG. 2.

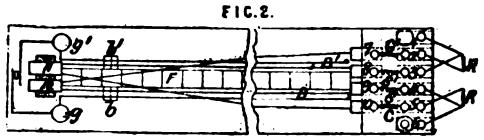

FIG. 4.

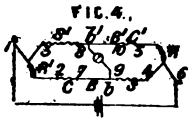

Thermometers. — The apparatus is designed to act by means of the change of electric resistance in a wire at different temperatures, and it is constructed on the principle of the Wheatstone bridge. If R be the resistance at t° and R_o at o°, then approximately $\frac{R}{R_o} = 1 + at + \beta t^2$, a and β being constants for a particular wire. In some metals β is positive and in others negative, so that by a proper combination of two or more metals the third term may be eliminated, and a wire obtained of which the resistance variation is proportional to the absolute temperature within a certain range. Fig. 2 shows the instrument as actually constructed. Fig. 4 is a diagram indicating the principle. The whole apparatus is duplicated, the two coils R, R^1 which are exposed to the heat, and which are generally wound up together and insulated, being connected to the six copper plates 1—6, as shown. These copper plates are placed under a slab of ebonite, in which holes are pierced; the sides of the holes and the copper beneath form cups, which are filled with mercury. Six other plates 7—12 are also provided, of which 8 and 11, 9 and 12 are connected by the bridge wires B^1, B, 7, and 12, 10, and 11 are also connected. The plates 1 and 6 carry binding-screws for the battery terminals, while the sliding connections b, b^1, moving along the central scale F and kept always approximately opposite each other, adjust the resistances so as to bring the needles of the galvanometers g, g^1 to zero. S, S^1, C, C^1 are resistance coils contained in a box with legs dipping into the mercury cups so as to make the connections as indicated. As near as possible the temperature coils R, R^1 are made equal and similar, as also are C, C^1 and S, S^1, while the

Digitized by Google

four last are wound up together in a box and insulated so as to compensate for each other's changes of temperature. It is further arranged that C + R should be nearly equal to S in resistance. In the diagram, Fig. 4, when a balance is obtained in the bridge by shifting the contacts b, b^1, $\frac{z + S^1 + 8b^1}{R^1 + z + C + 7b} \quad \frac{z + S^1 + B^1 + C^1 + z + R}{R^1 + z + C + B + S + z}$ 1 nearly, where z is the resistance of each of the wires connecting the coils R to the plates 1, 2, 3. . . . . Hence $R^1 = S^1 - C + 8b^1 - 7b$. By proper arrangements the quantity $S^1 - C$ may be made a constant, so that the change of temperature will be proportional to the movement of the contacts b, b^1 on the bridge wire.

14,741. Amour, J. H. Oct. 29.

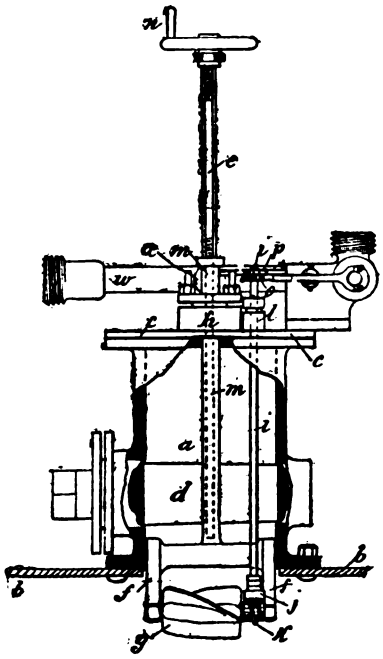

Logs.—The rotator g is carried by a forked bracket f at the end of a hollow internally-threaded rod m. This rod and the spindle i, which receives motion from the rotator by worm gear j, k, pass through stuffing-boxes h, l respectively on a plate c, which closes the end of the chamber a. A hole is made in the side of the hull b of the ship, and the chamber a is fitted over this so that the rotator &c. can be pushed forward, when required, into the water by means of the screw e and hand-wheel n. A cock d is provided, through a port in which the rotator &c. can pass freely when in the position shown in the Figure; if, however, it be desired to remove the plate c and its attachments, the bracket f &c. is drawn back through the cock d, and the latter then turned so as to close the chamber a and prevent water from leaking into the vessel. The spindle i may operate a counter directly, but if registration is desired at some distance from the rotator a pneumatic or electric indicator is employed. In the former case a double cam o, p is fitted to the spindle i, which operates valves, alternately connecting the pipe m with the engine condenser or other vacuum-producer, and with the air; the pipe m communicates with a cylinder having a spring piston, the consequent reciprocations of which drive the counter. The electric indicator may be operated by a single cam on the spindle i, which makes and breaks circuit at each revolution for an electromagnet. The core of the magnet is thus caused to reciprocate and work the counter.

14,783. Dobbie, J. C. Oct. 31.

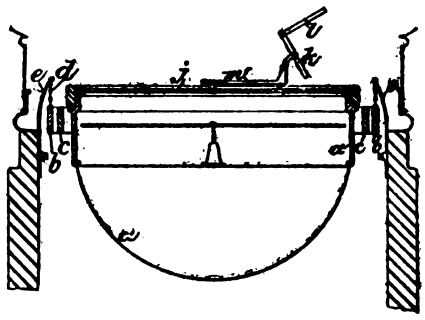

Compasses, magnetic.—In mariners' compasses the gimbals b, c, in which the bowl a is swung, are suspended by chains d from springs e secured to the binnacle. When there is only one gimbal ring it is attached to bow springs disposed horizontally. The triangular mirrors k, l, pivoted to each other, are swung in a fork at the end of an arm m pivoted at the centre of the glass j. The arm m is turned till the normal reflection of the object is seen on the centre line of one mirror, when its azimuth is read from the reflected scale in the other mirror.

14,809. Wrench, A. Oct. 31.

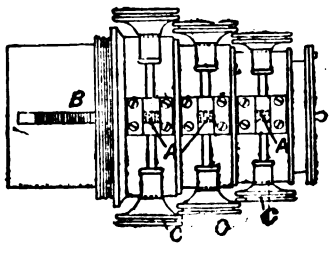

Magic-lanterns.—Relates to the objective tube, and consists in making it telescopic with several joints, each being adjusted by pinions A, A gearing into racks B, B on the next tube. The Figure shows the tube when at its shortest length, each

Digitized by Google

joint reaching the same limit to the left. By turning the milled heads C, C the tube can be greatly lengthened.

14,868. Foster, W. H. W. Nov. 1.

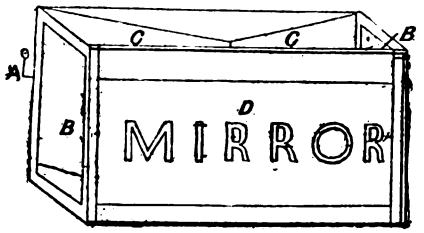

Reflectors.—Consists in placing a mirror of convenient shape in a box in which apertures are arranged to receive light, the mirror then reflecting it in any required direction. The Figure shows the invention as applied to advertising, light being received from two sources A, one at either side, through the apertures B, B, and thrown by the mirror C upon a perforated plate D. A similar arrangement may be employed for fixing in front of a railway engine, to show its destination.

15,012. Lucas, F. R. Nov. 3.

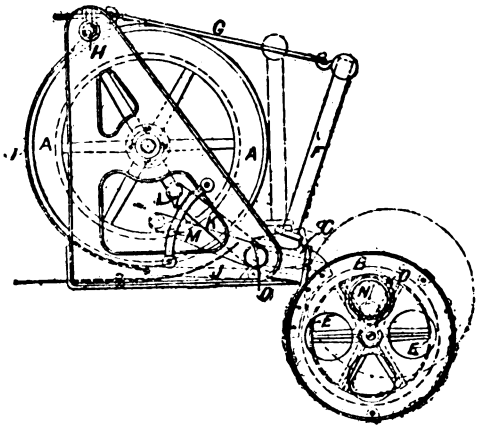

Sounding-apparatus.—The line reel is braked automatically as soon as the lead touches bottom. The line runs from the reel A through a block C, pivoted on the shaft D, and over a guide-wheel E, in a frame which swivels on the block C. A lever arm F projects from the block C and is connected by a spring G to one arm of a bell crank H near the top of the reel. From the other arm of the bell crank a brake strap I passes round the reel to a link J from a short arm on the shaft D. When the line is running off its tension keeps the wheel E down, slackening the brake strap. But when the lead touches bottom the spring G draws in the lever F and applies the brake. An arm K, which projects from the shaft D and has a pawl L to engage a toothed arc M, serves to keep the brake applied when the apparatus is not in use. The sounding is read from an indicator N, which is inserted into a ring O till it gears with the guide wheel E.

15,223. Barrett, H. Nov. 8.

Compasses, magnetic, mounts for. The mount or bezel consists of a ring A of metal cut through at the top and with a turned-over rim or edge. One end of the band is provided with a ring *a* which, when the band is closed, is held by a rivet *c* between two other rings *a* on the other end. Fig. 1 shows the mount in the open position ready for the reception of a compass &c. The mount may be suitably ornamented.

15,234. Bradley, R. Nov. 8.

Spectacles.—The wings or "temples" are of steel, sheathed in gold or other precious metal, and are attached to the hinge in a special manner. The sheath is put

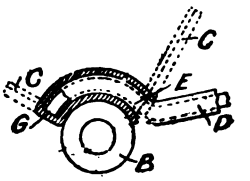

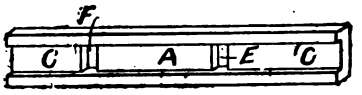

on as a circular tube and then drawn out to fit the rectangular core, the tips being formed by the flattened projecting ends of the sheaths. The Figures show the attachment to the hinge, the object being to avoid soldering the wing, and so affecting the temper of the steel. The central portion A of a grooved metal strip is curved and soldered to the hinge B, leaving free ends C. The end of the wing D is then passed through a slot E in the metal strip, and the free ends of the strip are folded back so as to form a sleeve. A second slot F in the strip leaves the end G of the sleeve open instead of blind, as shown.

15,251. Sperry, C. Nov. 8.

Logs.—A double pipe is passed through the bottom of the vessel, having its end closed, but a lateral opening in each member, one in the direction of the ship's head and the other of the stern. The difference of pressure set up in the two members when the ship is in motion is communicated to two chambers separated by a flexible diaphragm, the movements of which are used for obtaining the indications. In the connecting-tubes is a special arrangement of vessels containing mercury by which the indications are rendered

Digitized by Google

steadier and the liquid with which the diaphragm chamber is filled is sustained at the proper height. The movements of the flexible diaphragm are communicated by a bell-crank lever and other

FIG. 2.

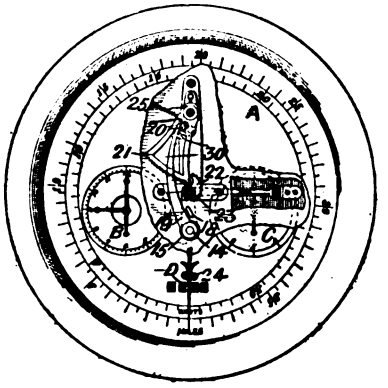

FIG. 4.

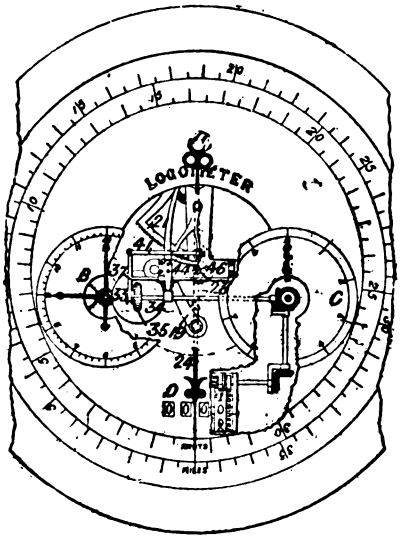

connections to the shaft 14, Fig. 2, carrying an adjustable curved arm 19 actuating the scroll sector and wheel 21 and 22. The point of contact of the arm 19 with the small wheel 20 on the sector, is adjustable by means of a screw 30 and the contact is maintained by a spring 25. The scroll gear is provided to allow of the speed indicator being graduated in equal divisions, the pointer 24 being fixed on the axis 23 of the scroll-wheel 22 and traversing the large dial A. B is the dial of a chronometer which drives a friction disc 33 at uniform speed. On the axis 23, Fig. 4, is fixed a pinion 46 gearing with a toothed sector 44 connected by a link 41 with a sliding frame which carries a friction-wheel 34 on the disc 33 fitted with antifriction wheels 35 around its periphery. The wheel 34 turns a spindle which is bevel-geared with the index spindle of the dial C showing fractions of a knot run, and also with a counter D having special Geneva-stop wheel gearing which shows the total number of knots. As the flexible diaphragm moves with changing speed of the vessel, the pointer 24 swings round and shows the speed of the vessel. At the same time the wheel 34 is moved more or less from the centre of the disc 33, and drives the indicator C and register D at a corresponding speed so as to show the total distance run.

15,513. Sudmann, J. Nov. 12.

Thermometers. — Two compound strips C, C^1 are fixed at the top to two lateral brackets *a* projecting from a board A. Their free ends are connected by links *e*, e^1 with a rotary disc *d* at the bottom of the board. Two parallel rods c^1 projecting from the disc hub embrace a pin *l* projecting from the tail of a toothed sector *i* which is pivoted in a frame *p* on a post *r*. The sector gears with a pinion *k* the arbor of which bears the dial hand Z. The joint pins at the inner end of the links *e*, e^1 can be adjusted in radial slots in the disc by a second disc with cross-slots; and the pin *l* can be adjusted in a slot of the sector by a screw *h*. The magnification given by the index can thus be varied. The board A is pivoted at *n* on a fixed board B, from which the post *r* carrying the frame *p* projects. By this arrangement with an eccentric *s* for turning the board A the index can be set without disturbing the working parts.

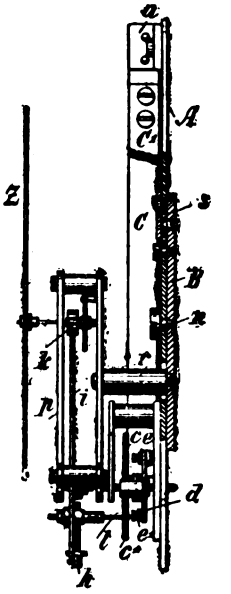

15,591. Sirieix, L. Nov. 14.

Compasses, magnetic. — Relates to a means of correcting deviations. The card B is provided with three parallel magnetic bars set on edge, one placed diametrically, and the other two, *c*, *e*, at equal distances on either side. A second double card *l*, l^1 is mounted below, the two parts being united by three similar magnetic bars set edgewise. In addition to these, the upper card *l* carries four pairs of thin magnetic bars set respectively on either side of four diameters symmetrically arranged. This compensating-arrangement is capable of vertical adjustment by means of the screw rod K and of a slight rotation limited by the stops S, S on a non-magnetic cross-bar F. The ends of the bar F are fitted with soft iron blocks G, G, and the cards *l*, l^1 are

Digitized by Google

adjusted so that their poles are opposite these blocks, the supporting-bar F being placed transversely to the length of the ship. Where there is

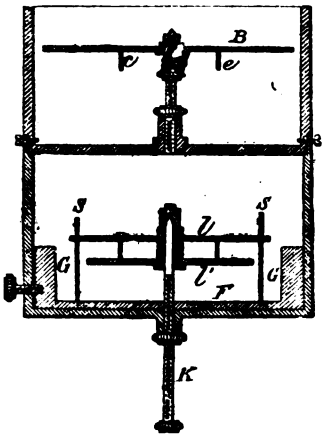

much vertical iron on the ship, a second non-magnetic bar with vertical soft iron strips at its end is pivoted on the rod K and adjusted fore and aft.

15,844. Phillipsbourne, C. Nov. 18.

Barometers; thermometers.—Consists in mounting a barometer, an ordinary thermometer, and a minimum thermometer upon the same slab of porcelain or other material.

15,907. Gibbons, G. B. A., and **McEwen, C. J.** Nov. 19.

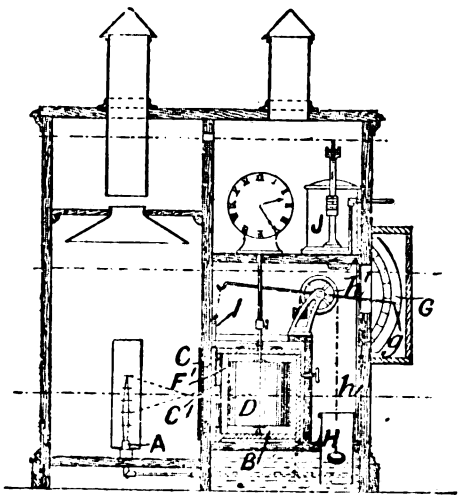

Photometers for gas power. A standard burner A is arranged in front of a brass plate C with slot C^1 for admitting rays to the chamber B, lined with black velvet. The light after passing through a second slit in a brass plate F^1, with flanges to keep off reflected light, falls on sensitive paper wrapped around the clockwork-revolved drum D and causes a photographic record of the height of the flame to be traced. A horizontal cross-wire, interrupting the light as it passes through the slit, causes a white band in the diagram which acts as a reference scale of candle power; several such cross-wires may be employed, if desired. J is an ordinary governor. A record of the pressure is kept, preferably in the following manner:—The float H is connected to a counterweight by a cord *h* passing over a pulley h^1, by which the pointer *g* is moved over a scale G. At the other end of the pointer a triangular wire I is suspended so that its horizontal base intercepts the light passing through the slit; a white "pressure" line is thus left simultaneously on the diagram.

15,951. Nordenfelt, T., [*Matern, B. von*]. Nov. 19.

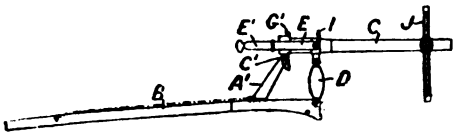

Range-finders.—Relates to a range-finding gun for use with infantry and machine-guns, and intended to be fired at a high angle so that there will be an appreciable difference in elevation for a small difference in range. The distance of the point of impact is read from the range strip of the sight. The gun C is hinged by the pin C^1 to the arm A^1 on the board B. D is the elevating-screw and I, J the sights. The breech block slides vertically and is raised by the bridle-piece E, the handle E^1 of which carries the firing-pin. The upper end G^1 of the pivoted extractor is struck by the breech block during its ascent, and the empty cartridge case is thrown out. The gun and its mounting can be folded up for removal.

16,598. Hall, F. J. Dec. 2.

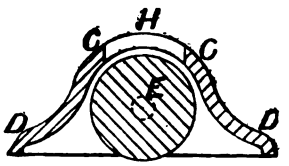

Parallel rulers.—A ruler E is journalled in the ends of a cylindrical shell C, C, preferably of the section shown, having projecting edges D, D, which may be graduated if desired. An aperture H may be made near either end, and the roller graduated beneath to show the distance moved between each pair of lines ruled.

Digitized by Google

17,107. Cardwell, W. A. Dec. 12.

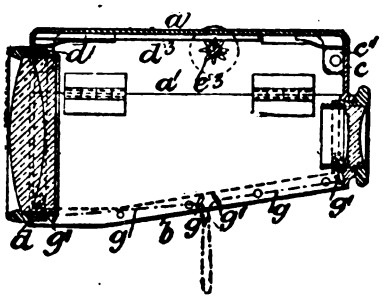

Opera, field, and marine glasses.—The framework is constructed so as to fold up when not in use, and occupy less space. The Figure shows the arrangement in section. The top *a* is rigid, and has side flanges a^1. The end *c*, carrying the eye-pieces, is hinged to the top in such a manner that it will be firmly held both in its vertical and horizontal position. The end *d* carrying the object glasses is similarly hinged to a focussing-slide, which is traversed in the top *a* by a rack d^3 and pinion e^3. The sides are formed by flaps hinged to the flange a^1, and the bottom is formed by a piece of flexible material *b*. The whole can thus be folded into a flat form, having the thickness of the flanges a^1. When required for use (after opening out the flaps) the lenses are turned into position by pulling a cord *g*, which is led through eyes g^1 on one flap and out through the flexible bottom *b*. Modifications are obtained by making the sides flexible, and having the bottom *b* either flexible or rigid.

17,227. Haddan, H. J., [*Guarracino, H.*]. Dec. 14.

Rulers are covered with blotting-paper or other absorbent material, or may be entirely composed of such material, laid on in layers removable when necessary. Advertisements may be printed on the several layers.

17,503. Cook, G. Dec. 20.

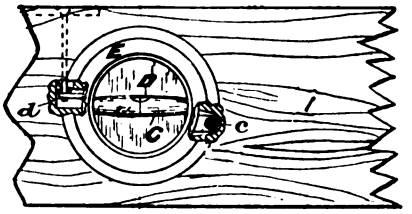

Levels.—The bubble-tube of spirit levels is made spindle-shaped and is placed across a hole through the block, so that the latter may be used on any face. The Figure shows the tube C mounted diametrically in a metal ring and protected by glasses D fitting rabbets round the ring. The bubble-tube ring is confined laterally by fixed conical rings E, but has a little play about a pivot *c* on one side, so that it can be adjusted by a screw *d* on the other. Another tube similarly mounted at right-angles to the tube C enables the block to be used for plumbing.

17,580. Andrews, H., and **Norton, J. A.** Dec. 21.

Range-finders.—Graduated scales *l*, l^1, for infantry and cavalry respectively, are engraved or photographed, together with the crossed sighting-lines *m*, m^1, on a disc of glass placed in the focus of the eye-piece of the sighting-telescope. The horizontal line *m* serves as the base of the range-finder. The telescope is shown in Fig. 1 in side elevation and attached to the gun. The telescope A is carried at its forward end by a ball-and-socket or other universal joint *a* on the bracket B, while its rear end is provided with a worm-wheel segment *d* into

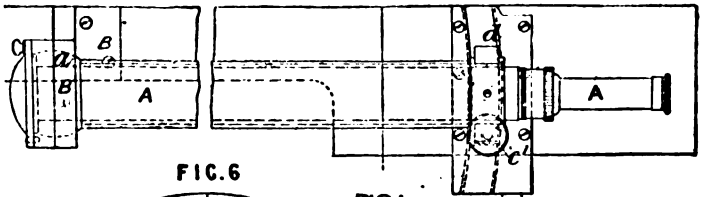

FIG. 1.

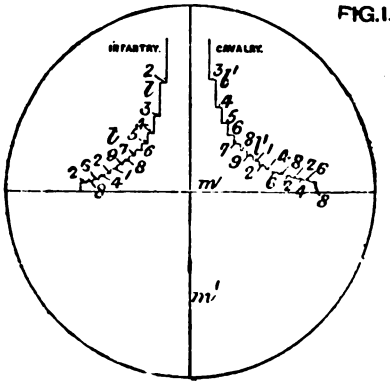

FIG. 6

Digitized by Google

which gears an endless screw operated by the hand-wheel *h*. A second wheel c^1 provides for lateral adjustments. Suitable scales are provided for use when adjusting the telescope horizontally and vertically. Means are provided for adjusting the focus of the telescope without displacing the range-finding scales and sighting-lines.

17,743. Hughes, G., [*Gire & Co.*]. Dec. 24. *Amended.*

Thermometers combined with feeding-bottles. A thermometer *t* is placed in a recess moulded in the side of the bottle and is covered by a plate of glass *f* secured in position by strips of vulcanized rubber &c. *g*. The suitable temperature for using the food may be marked.

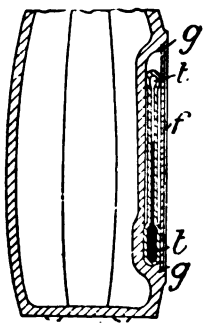

17,962. Bagshaw, W. Dec. 31.

Dividers for measuring the average length of the ordinates of steam-engine indicator diagrams. A dial *d* is mounted on the pivot *c* of the legs *a*, *b*. When the legs are opened a spring pawl *e* turns the dial an equal angular distance, and return movement is prevented, as the legs are closed, by a spring detent *f*. *h* is an index to show the distance the dial has moved. Supposing the diagram to be divided into ten parts, the ten ordinates are measured by the compasses, the legs being closed between each measurement, and the average ordinate is then read off, or obtained from the dial.

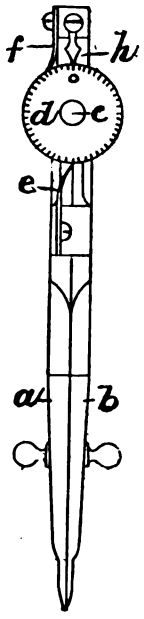

18,001. Baynes, W. M. Dec. 31.

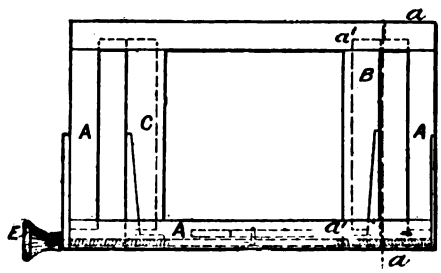

Magic-lanterns, slide-carriers for. The slide is held centrally in the carrier by sliding-pieces moved simultaneously by a screw. In the Figure, A is a rectangular frame of wood or metal, the top and bottom rails a^1, *a* of which are grooved to receive the ends of the pieces B, C, which are fitted at the bottom with nuts to take the screwed spindle E, which is carried in bearings in the frame. The screw is right-handed at one end and left-handed at the other, so that by turning it by means of the knob shown the pieces B, C are made to approach or recede.

18,026. Nowack, J. F., and **Bahlsen, H.** Dec. 31.

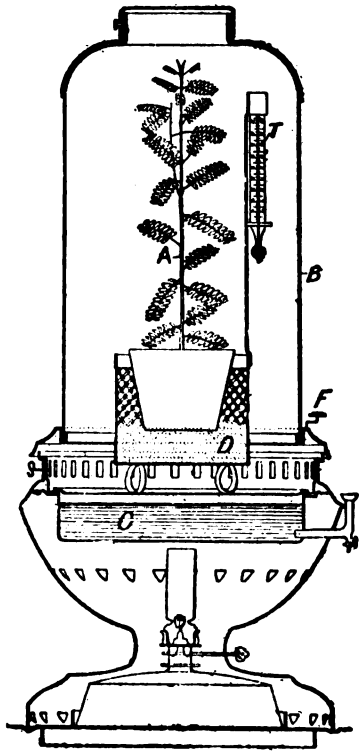

Weather indicators.—A certain sensitive tropical plant (*Abrus precatorius*) A is placed in a glass

Digitized by Google

ase B, the temperature being kept above 18° R. by a water bath C. The pot is placed on a bed of sand D, and the plant is shielded from direct sunlight by a blind. Suitable perforated ventilating-rings are provided at the top and bottom of the case. The case is fitted with a thermometer T and a magnetic needle F. It is stated that the leaves of the plant are opened, closed, or otherwise affected by the weather forty-eight hours before the corresponding change takes place. Earthquakes are announced by the bending of branches, and thunderstorms by irregularity of the leaflets. The branches also tend to set in the magnetic meridian, or at right-angles to the magnetic meridian.

A.D. 1888.

362. Broughton, V. L. D. Jan. 9.

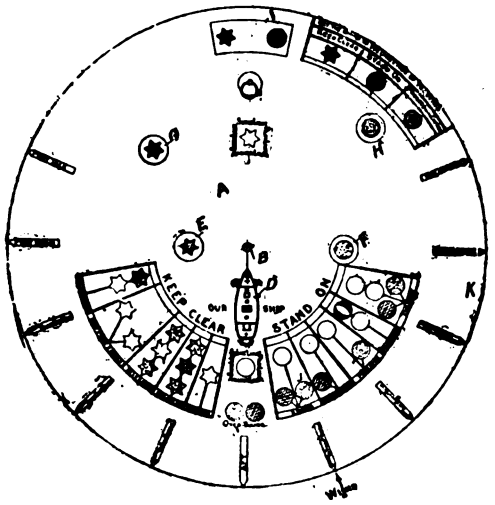

Course indicators.—The instrument is adapted to show the rule of the road at sea in special cases. A card or disc A, on which may be painted various special signals, is capable of turning about a pivot B over a plate K, so that the position of the wind arrow on K in regard to the diagram D, representing a ship, corresponds with the direction of the wind with regard to the vessel on which the observer is placed. Certain symbols on the plate K, the shapes of which (a star, circle, or circle with band) indicate the manœuvre to be performed, appear through apertures E, G, I, H, F in the disc A, and these symbols are of various colours. If, then, the disc A be adjusted correctly according to the direction of the wind, and a light observed in a certain direction corresponds in colour with the symbol in the aperture in the same direction, the shape of that symbol will show whether the ship is to "stand on," "keep clear," or "proceed with caution."

423. Le Prince, L. A. A. Jan. 10.

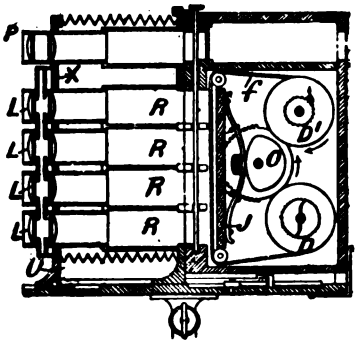

Magic-lanterns for zoetrope pictures. The invention includes a camera, as shown, for taking photographs of successive positions of moving bodies, and a similarly-constructed apparatus for throwing the successive pictures on a screen as in the magic-lantern. In the camera a number of similar lenses L, L, say 16, throw their images on

Digitized by Google

two strips *f* of sensitized paper carried on the rollers D, D¹ of two roller slides, which are fed alternately by the mechanism of the camera. Before exposure each film is clamped by a panel J forced up by a cam O. Extension tubes R, R are fixed on the lens tubes to exclude side lights. The instantaneous shutters consist of two rotary sectors which are moved forward by segmental wheels and brought back in rapid succession by springs; the shutters are connected by a suitable train of gear so that the exposures are made for each lens in the proper succession. In the lantern or zoetrope there is a similar series of shutters; the transparencies are fixed on suitable bands which are moved forward in a similar manner to the strips in the camera. The pictures are thus thrown on the screen in the same order as that in which they were photographed. A stand attachment is fixed to the camera with joints to allow the camera to be directed in any required direction. Focussing-lenses P are fixed on the top of the camera.

---

435. Defries, W. Jan. 11.

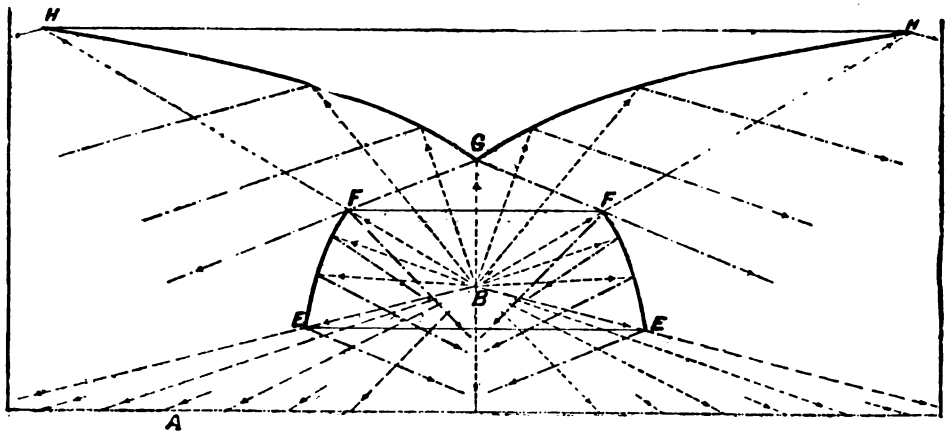

Reflectors.—The object of the invention is to distribute the whole of the available light uniformly or in a given proportion over the area to be illuminated. For the former purpose the area is divided into *n* preferably equal parts, and if any of these subtends at the source of light an angle greater than $\frac{1}{n}th$ of the total beam available, it is arranged to be illuminated by direct light only. Supposing there then remain *m* portions, the total beam is divided into *m* equal pencils. The reflector is so constructed that it directs upon each area a pencil of light which together with the direct pencil is equal to $\frac{1}{m}th$ of the whole available beam. In this way, by suitably increasing the number of divisions, a practically-uniform distribution is attained, and in a similar manner a distribution in any given proportion may be effected. The Figure shows a section of a reflector constructed according to this principle. A is a plane parallel to the area, divided as above indicated and receiving direct and reflected rays; the area itself is usually so distant that direct and reflected rays alike may be considered as emanating from the source of light B. In order to utilize the whole light, without unduly increasing the size of the reflector or making one part interfere with another, additional reflectors E F, E F, constructed on the same principle, are employed; these can always be introduced between the extreme rays employed for direct illumination and the extreme rays falling on the main reflector H G H. A special application to a masthead light is described and shown. In this case the reflector consists of five parts, top, bottom, back, and two sides, the last being so arranged that the light reflected from the back passes out behind them.

---

483. Reynolds, A. W., and **Reynolds, F. S.,** [*trading as* Reynolds & Son]. Jan. 12.

Compasses, magnetic.—Relates to a means for adjusting the centre pin of sighting-devices and dispensing with permanent centres fixed on the glass cover. The pin C is carried by a pinion gearing into four similar rack-bars B, B working in grooved plates A, A. The end of the pin has a square head for a key by which the pinion is turned, and the racked bars moved simultaneously outwards or inwards so as to bring the feet E at their ends against the compass verge. The pin will then be exactly central.

(*For Drawing see next page.*)

Digitized by Google

483.

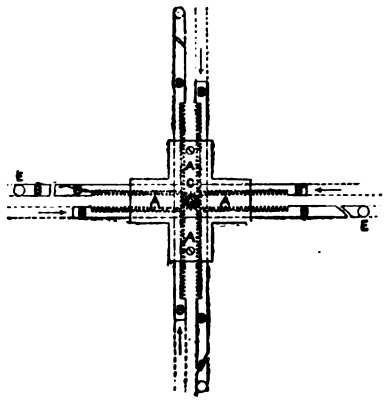

640. Sinclair, J. Jan. 14. *Drawings to Specification.*

Thermometers.—In thermostatic apparatus for incubators and foster-mothers, a thermometer is used into which wires are fused in the bulb at the graduations 104°, 105°, and 107° respectively. As the mercury rises, it closes various circuits controlling a damper in various ways. When the 107° graduation is reached, the circuit of an electric bell or other alarm is closed.

907. Barr, F., and **Watson, T. P.** Jan. 20.

Tripod stands for photographic cameras. Each leg is in two, three, or more parts A, B, C, tongued and grooved so as to slide one on the other. The upper sections consist of pairs of bars *a*, *a*, *b*, *b* connected by cross-pieces a^1, b^1 which also form stops; the lowest section C is solid and has a stop plate c^1. The middle and lowest sections have racks D, D^1 with which engage pawls E, E^1. The pawl E is disengaged by operating the push-piece e^2, but the pawl E^1 is automatically disengaged on closing up the stand by striking against the curved part a^3.

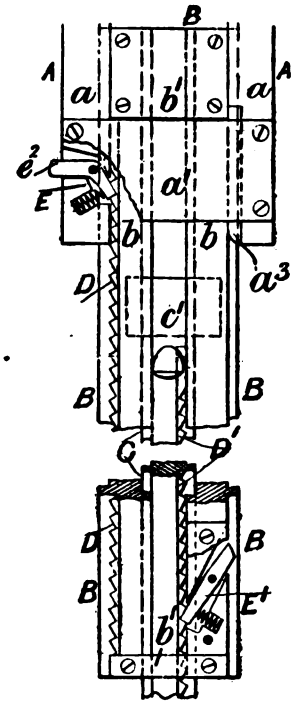

1204. Walker, H. C., and **Heffer, H. C.** Jan. 26. *Drawings to Specification.*

Range-finders.—Two plates are placed inside the body of a telescope transversely to the axis and with horizontal parallel edges between which the object is viewed. The distance between the edges of the plate is adjustable by a sleeve or other appliance sliding longitudinally along the body of the telescope and operated by inclined planes or other device. A secondary adjusting-screw is connected to the sliding sleeve to vary the distance between the plates to suit the different heights of cavalry, infantry, &c. When applied to a binocular field glass the same screw operates both sets of plates.

1213. Leighton, J. L. Jan. 26.

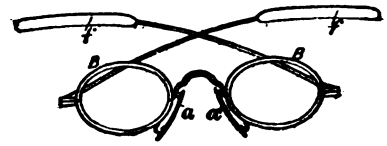

Spectacles and eyeglasses.—The spectacle or eyeglass frame B is fitted with two voltaic couples *a*, a^1 of suitable metals. The copper and zinc of the opposite pairs are connected by a fine wire on the bridge. The pairs have an absorbent material saturated with chloride of zinc, and dried. The plates are suitably shaped and attached to the frame. Similar plates may be adapted to the arms *f*, *f*.

1423. Smith, T. Jan. 31.

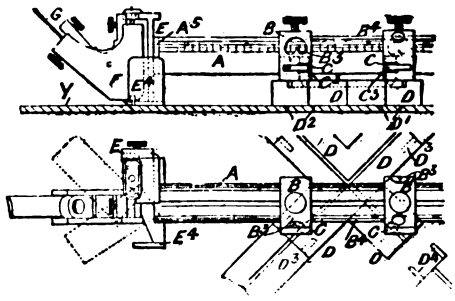

Ellipsographs. — The glass for oval picture frames, the oval holes in picture mounts, templets used in making oval picture frames, oval and circular designs, &c. are cut or marked out as follows:—On a graduated trammel bar A, adjustable in length, slide two sockets B, B^1 carrying pins C flattened at their lower ends so as to work in grooves in a trammel plate D capable of extension by extra pieces D^3, D^4. The sockets B, B^1 may be coupled by a bar B^4; they cannot turn on, but may be clamped to, the bar A, and they have pointers B^3 to enable them to be set on the bar A and springs C^3 to keep the grooved pins C in their

Digitized by Google

sockets. For cutting and bevelling mounts, the cutter G may be held in a vertical or adjustable inclined position in a case F pivoted like a castor in a frame E which is carried by a bracket on the bar A and rests on the cardboard &c. Y to be cut. A projection E^4 on the frame E serves as a push-piece by which to operate the trammel, the blade automatically keeping in position when properly fixed. For cutting glass or marking out designs a glazier's diamond or a pen is used fitted in a slightly-modified holder or end fitting which has adjustments to counteract the effect of uneven surfaces and springs to give a uniform pressure on the diamond or pen. The trammel plate may be fixed to the work by projections D^2, by suction cups, cement, &c. By using only one of the sockets B and pins C a circle can be cut or marked out.

1635. Crane, F., [*Pincoffs, M.*, and *Korolanyi, A.*]. Feb. 3.

Magic-lanterns.—A concave mirror *f* is engraved as a clock dial or with a design or an advertisement, and in front of it work the clock hands f^1, f^2 or a moving design or advertisement. The mirror is illuminated by a candle *b* kept at the top of a socket b^2 by a spring b^1, and the image of the reflector is projected on a screen by a lens *g* in a focussing-tube d^2. In place of the candle a lamp adapted to maintain the light at a constant level may be employed.

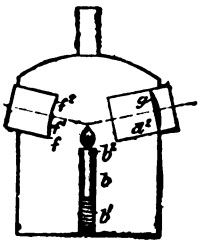

1700. Goyon, C. M. M. de, Duc de Feltre. Feb. 4.

Sounds, locating.—Relates to topophone apparatus for localizing or determining the direction of sounds, and consists of (1) an apparatus in which resonators are employed, Fig. 1, and (2) electrical apparatus in which microphones are used, Fig. 3. In the first apparatus, one or more resonators or receivers *a*, *b*, *c*, communicating through diaphragm chambers *e* with tubes *f*, *h*, *m*, *n*, are mounted in a bearing *i* fixed upon the deck or bridge of a vessel. The resonators are rotated in horizontal planes by a handle *x* on a disc *v* fixed to the tubular shaft *h*. When any of the resonators vibrate, a sensitive flame *p* in a lantern *q* is set in vibration, and when the maximum elongation of this flame occurs the mouths of the receivers are directed to the source of sound. A pointer Y fixed fore and aft indicates on the disc *v* the angle made by the direction of the sound with the course of the vessel. The maximum elongation of the flame may be measured by a rotary mirror *r* and scale *t*. The tubes *f*, *h* may be filled with air and be connected to a sphygmograph, or the vibrations of the air may be transmitted to an electric commutator acting on a series of rheostats in the circuit of a battery, the current of which is measured by a galvanometer. In the second form carbon pencils *b* of microphones are mounted on a sounding-board *a*, and are in the circuit of a battery *e* including a galvanometer *f* and, when desired, a telephonic receiver *g*. The sounding-board &c. is rotated about the axis *c* until the maximum sound is indicated or heard. This occurs when the direction of a sound is perpendicular to the board *a*. Several of the above apparatus may be combined, in which case they are fixed and may form the sides of a square or other polygon. The deflections of the galvanometer may be graphically registered, or a siphon or other recorder may be used instead of the galvanometer.

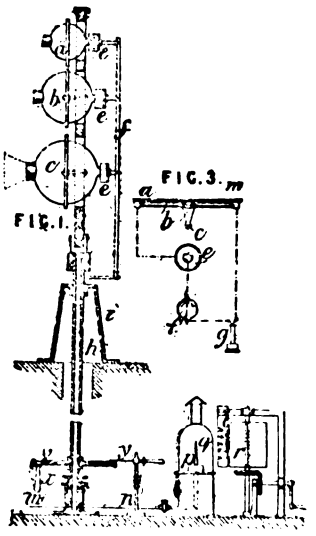

1789. Potter, R. Feb. 7.

Logs.—The rotator A with vanes B is journalled in bearings carried by the arms N, N and enclosed within a cylindrical casing C. The casing is fixed to the bottom or side of the strip, and a cord E, passing round a pulley D on the axis of the rotator, communicates the latter's rotation to a second pulley K in the vessel and thence to the register. K is mounted on a spring stand F, G, H, J, which ensures the tightness of the cord. The cord and pulleys may be dispensed with and gearing substituted.

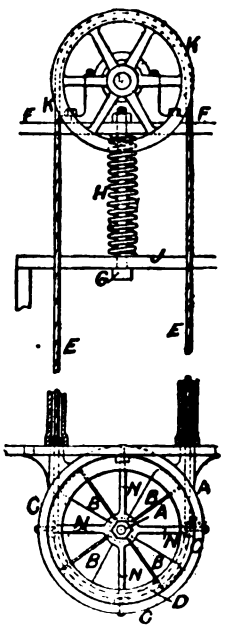

Digitized by Google

1794. Watkin, H. S. S. Feb. 7.

FIG. 1. FIG. 5.

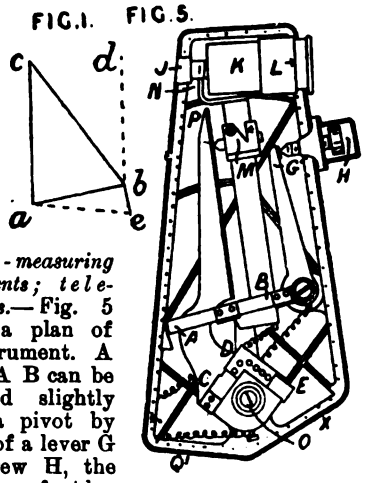

Angle-measuring instruments; telemeters.—Fig. 5 shows a plan of the instrument. A mirror A B can be turned slightly about a pivot by means of a lever G and screw H, the amount of the movement being read from a graduated arc at A. In front of the mirror A B a pair of mirrors C D, D E, at right-angles to each other, can be turned together about an axis O by means of the arm O P. Traversing the drum K on the screw J turns the bar B M N about its pivot at B, which imparts its motion to the arm O P by means of the contact point on the movable collar M. The drum is spirally graduated, and is read by a rack on a band L which embraces it. The arm O P is graduated for setting the collar M. The mirror A, B is silvered only on one half, so that at the eye-pieces at X, Q¹ one object can be seen directly through it, and another by double reflection between A B and one of the mirrors C D, D E. When the drum K is at zero the mirrors C D, D E are equally inclined to the central position of the mirror A B. The instrument is used with a base *a b*, Fig. 1, approximately at right-angles to the line *a c* which is to be measured. Observing first from *a*, *b* and *c* are made to coincide at one of the eye-pieces by adjusting the mirror A B. Observing then from *b*, *a* and *c* are brought into line at the other eye-piece by turning the mirrors C D, D E. The angle turned through being half *a c b* the whole angle and the length *a c* are shown by the drum K. If the angle *c a b* is not at right-angles, a percentage indicated by the graduations I is added or deducted. The graduations on the arm O P represent different bases. The base *a b* may be measured from *a* with a subsidiary base *b e*, the pairs of points *c*, *b* and *c*, *e* being successively aligned at the same eye-piece.

1819. Lucas, E. Feb. 7.

Squares.—Consists in providing the blade of a T-square with a sliding clamp A, which can be fixed in any position by a set-screw, so that the clamp bites against the other side of the board by means of springs E, E, and thus steadies the square. If the T-square has a taper blade a spring projecting therefrom holds it firm in the groove of the sliding clamp.

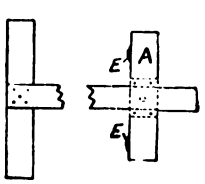

2152. Ferguson, F. O. Feb. 13.

Mathematical drawing-instruments. — A pencil case or, according to the Provisional Specification, a penholder is arranged to hold a pair of compasses, dividers, &c., and is marked with various scales on the outside. The holder may be telescopic.

2218. Stevens, J. Feb. 14.

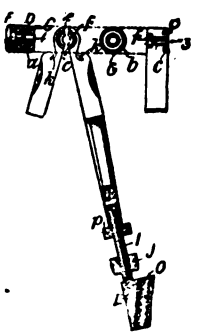

Compasses and dividers. — The tops of the legs are not crossed or hinged on a pin, but are mutually opposed and held together by caps on the ends of the pin. The pin *a* occupies curved recesses *f* and one or both the caps F, G at its ends has a concentric flange *b* fitting the groove *c*. A sufficient amount of bevel *e* is given to allow the desired maximum of opening. The ends of a bent spring are fastened in the notches *k* and the centre of the spring carries the compass head. The holder L is attached by a stem I, which screws into a tapped hole in the leg and is locked by a set nut P. The pencil or point is held in the socket *o* by a bevelled nut J, which is screwed down the stem I till it presses the pencil laterally. The stem I may be rigidly attached to the leg, and the holder L may screw upon it.

2309. Richard, J., and Richard, F. Feb. 15.

Anemometers; pyrometers.—Relates to integrating-apparatus based on the principle of the disc and roller, and its essential elements are shown in the Figure as applied to measuring the quantity of liquid passing through a sluice, but these elements remain the same in all the applications, among which anemometers and pyrometers are mentioned. The principal parts consist of a roller M in contact with a disc F (or preferably two discs driven at equal speeds in opposite directions). The axis of the roller has a worm B thereon gearing with a worm-wheel A, and the axis is capable of moving longitudinally under certain conditions. For determining products, the discs F are driven at a speed proportional to one factor, and the distance of the roller M relative to the centre of the discs is adjusted proportionally to the other factor. The

Digitized by Google

worm B then drives the wheel A at a speed proportional to the product of the two factors and the product is indicated by a counter driven by the wheel A, or by clockwork X to which the wheel A

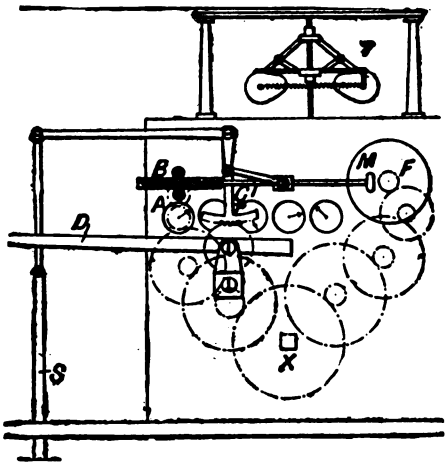

acts as an escapement. For determining quotients and velocity ratios, the discs are driven proportionately to the numerator, and the wheel A to the denominator, when the worm B will screw itself on the wheel A until the velocities of the periphery of the roller M, and of the part of the disc F against which it is in contact, become equal. The position of the roller relative to the centre of the disc then gives the required quotient or ratio. Where complex products and quotients of the form $(a \pm b)(c \pm d)$ or $\frac{(a \pm b)}{(c \pm d)}$, &c. are required, differential gear is employed to drive the discs, or the discs and wheel A. In many cases the movement of the roller may be graphically recorded by a style on the arm D resting on a drum revolved by clockwork. For anemometers &c., where electric currents pass intermittently and cause the rapid vibration of the armature of an electromagnet, the clockwork drives the disc uniformly by gearing from one end of its spring, and the wheel A by gearing from the other end of the spring, which latter gearing is controlled in its movement by an escapement connected with the armature of the electromagnet. In the case of pyrometers, the position of the roller M being determined by a compound metal strip or Bourdon tube, and the discs F driven uniformly, the counter controlled by the wheel A totalizes the temperatures.

2375. Edwards, E., [*Bach, C.*]. Feb. 16.

Stereoscopes.— Relates to coin-freed apparatus for exhibiting stereoscopic and other views. The views &c. are mounted as an endless chain A passing round square rollers *c*, *d*, the upper of which carries a ratchet-wheel *e* on its axis; the lower is controlled by a weighted lever resting in turn on pairs of a series of rollers arranged symmetrically about its axis so as to prevent vibration. The pictures are viewed through a lens or lenses as they come opposite thereto, a lamp *x* provided

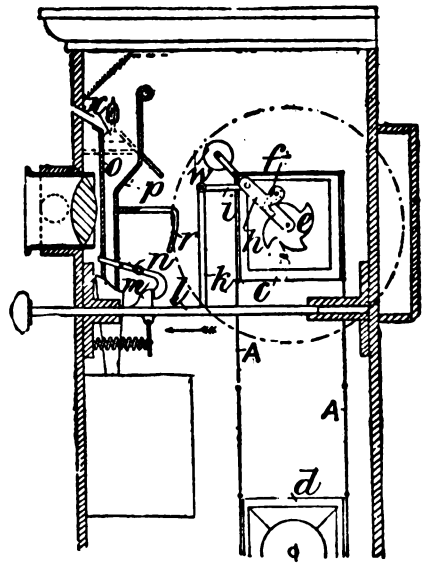

with suitable reflectors being used for illuminating. The movement of the band A is caused by a pawl *f* on the lever *h*, which is connected by link *i* and rod *k* with the push-rod *l* freed by the insertion of a coin. Normally the push-rod is locked by the catch *n* engaging with the projection *m*, but on a coin being inserted the catch is released. The coin falls down the shoot formed by the pivoted plates *p* and *o*, and depresses the forked end of the catch. The push-rod can now be worked until all the views have been displayed, when a roller *w* strikes the projection *r* on the plate *p* and thrusts the shoot back sufficiently to discharge the coin.

2526. Short, T. W., and **Mason, W. J.** [*trading as* Short & Mason]. Feb. 20.

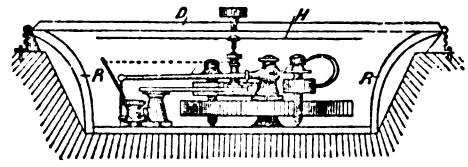

Barometers.—Relates to aneroid barometers and consists in constructing the reflector R (which is used for illuminating the graduations on the glass dial D and for showing clearly the position of the hands H) of card, clay, porcelain, opal glass, xylonite, and non-corrosive substances other than metal.

Digitized by Google

2673. Wiborgh, J. G. Feb. 22.

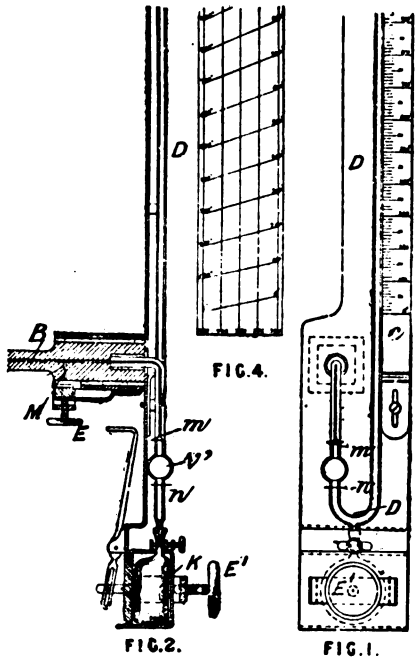

Thermometers; barometers.—The apparatus is based on the fact that if a volume V^1 of air at t^C be forced into a bulb containing a volume V of air at T° and the whole quantity of air allowed to assume the temperature T° then

$$h = \frac{V^1}{V} H \left\{ 1 + a\ (T\text{-}t) \right\}$$

approximately, where H is the atmospheric pressure at the time, h the additional pressure necessary to drive in the volume V^1 of air, and a the coefficient of expansion of air. Hence, if h be measured by a manometer having an adjustable scale graduated for temperatures, the instrument becomes a thermometer. Moreover, if T and t are equal $h = \frac{V^1}{V} H$, and the instrument can be used as a barometer. Figs. 1 and 2 show an example of the instrument, which may however be somewhat varied as to details. The bulb V (not shown) to be subjected to the temperature to be determined is connected by a fine tube B with the bulb V^1 of which the temperature is known, a bye-pass M allowing free communication with the outer air until the air in V has attained the temperature of its surroundings; the bye-pass M is then closed by turning the screw E, after which mercury is forced up from the point n to the point m by compressing an elastic reservoir K by the screw E^1. The corresponding rise of the mercury in the manometer tube D is measured by the vertically-adjustable scale C, and as this rise is proportional to the difference of temperatures, this difference can at once be read off, the scale being graduated in temperatures. The scale C must be adjusted according to the prevailing barometric pressure, which may be observed by an independent barometer, or by the instrument itself when the bulbs V, V^1 are at the same temperature. As the graduations of the scales vary slightly according to the pressure, a scale, such as is shown in Fig. 4, allowing for the normal range of atmospheric pressure, may be employed; this may either slide horizontally, or be wrapped on a revolving cylinder. A combination arrangement, including a third bulb to indicate the barometric pressure to save trouble in adjusting, may be used. The method of procedure is exactly similar when the instrument is used as a barometer, the bulbs V and V^1 in this case being kept at the same temperature, and the scale marked for pressures.

2703. Hargrave, F. Feb. 23.

Sounding-apparatus.—A weighted sinker A at the end of a sounding-line contains two insulated wires from a battery on the vessel. One of the wires terminates in a bolt F at the bottom of the sinker, and the other in springs E at the side. When the bolt drags on the ground, the springs E make contact with the bolt, and complete the electric circuit, causing an alarm bell on the vessel to ring. The bottom of the bolt is cupped so as to bring away a sample of the bottom. Two other springs E are placed at right-angles to those shown.

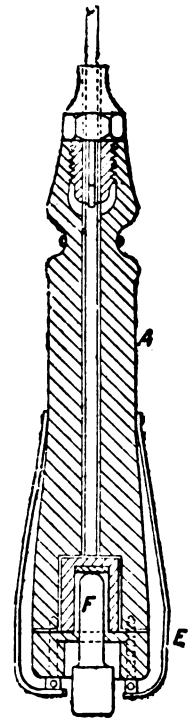

2924. Lorrain, J. G. Feb. 27.

Kaleidoscopes.—Consists in the use, in combination with a toy, such as a kaleidoscope, actuated by a mechanical motor, of an electromotor for automatically and periodically winding up the mechanical motor. V represents the toy mechanism. The mechanical motor W may consist of a wound-up spring, weight, or equivalent device. The electromotor X, contact-device Y, and transmitting-mechanism may be of the form described in Specification No. 10,785, A.D. 1887, the function of the contact-device being to periodically and automatically complete the circuit containing the electromotor and generator &c. Z for a

Digitized by Google

sufficient time to enable the motor to wind up the spring, weight, &c. of the mechanical motor.

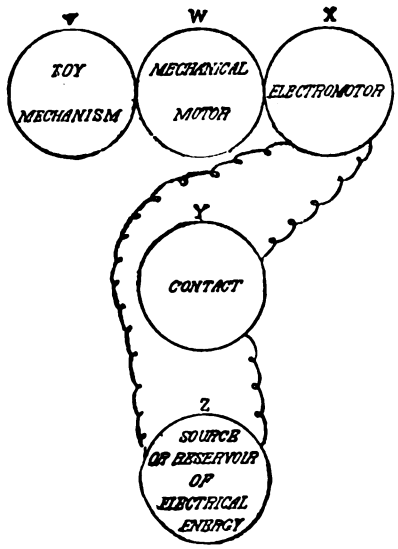

2951. Mievsky, L., Humphreys, W. J. B., and **Dale, H. F.** Feb. 28.

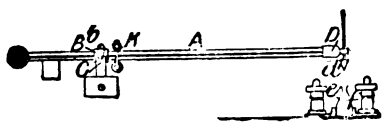

Thermometers.—An alarm thermometer A has a sliding device B, adjustable by a screw if required, and with knife-edges *b* resting on seats *c*; the knife-edges may be formed upon the thermometer, or upon a carriage in which the thermometer is placed. The position of the slider is adjusted so that when a certain temperature is reached the thermometer tilts and drives a wedge-shaped or other contact-piece d^1, carried by a thimble D, between the contacts *e*, *f*, thus completing circuit for an alarm or alarms. To render the action more certain, a carriage K is provided which, when the thermometer is depressed, runs down its stem and forces the contact-piece firmly between *e* and *f*.

3017. Abel, C. D., [*Kotliarewski, P.*]. Feb. 28.

Anemometers; current meters.—Relates to apparatus for indicating the speed of flow of liquids or gases. The apparatus is carried by a frame 4 suspended by the loop 2 and a wire rope, and steadied by a weight attached to the loop 3. The vane spindle 13 is kept in the line of the current by the tail fin 5, and its rotation is communicated by the pinion 12 and wheel 6 to the tube 7, from

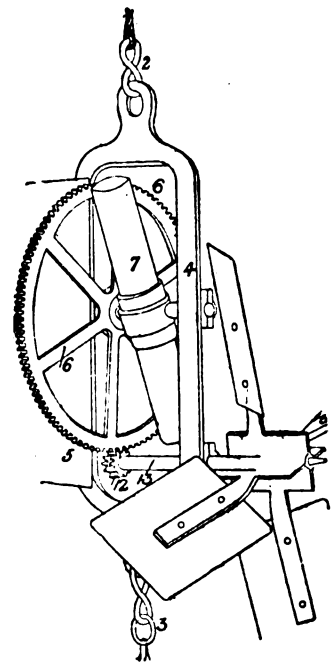

end to end of which a weight falls. The speed is estimated by the sound of the falling weight, or the weight may be caused to complete a circuit for an electric indicator or recorder.

3021. Blakesley, T. H. Feb. 28.

Barometers.—A fine tube of uniform bore, closed at one end and open at the other, contains a thread of mercury, say 10 inches in length, between which and the closed end is a cushion of air. Each end of the tube is provided with a hook by which it is alternately suspended with closed and open end downwards, the length between the mercury and the closed end being observed in both cases. The sum of these lengths, divided by their difference and multiplied by the length of the mercury thread (in inches) gives the atmospheric pressure in inches of mercury.

3196. Ramsden, J. W. March 2.

Tripod stands for photographic, surveying, and other purposes. The head consists of a centre piece *a* to which are jointed three arms *b*. To each arm is hinged an angle bracket e^1, e^2 and to these are jointed the split upper ends *d* of the legs as shown. When folded the arms *b* hang vertically as in Fig. 2. The lower parts D of the legs are

Digitized by Google

T-shaped and work in similarly-shaped spaces between the L-shaped upper parts, which are connected by plates and U-clasps h^1, h^2. Sufficient friction is given to hold the parts in any position

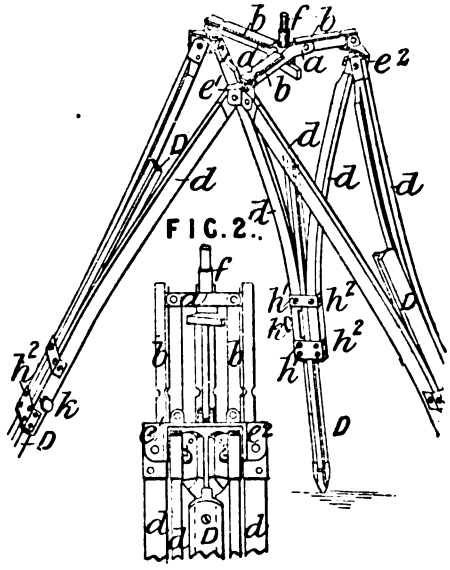

FIG. 2.

by springs adjusted by set-screws R. The camera &c. is fixed by the screw *f*. The stand may be folded or extended without fastening or loosening parts.

3412. Birkbeck, H., [*Mattison, L. H.*]. March 6.

Wind vanes.—Consists in providing transparent receptacles L, L in the body of the vane in which water and phosphorus are placed, so as to be luminous at night. The direction of the vane is thus indicated, the two rear receptacles being placed close together, so that no confusion can arise with the single receptacle at the front of the vane.

3657. Lovibond, J. W. March 9.

Kaleidoscopes.—The object of the invention is to render the patterns less uncertain and make them recoverable. For this purpose the ordinary tube with three mirrors is usually employed, though in some cases this may be modified, but the loose pieces of glass are dispensed with and in their place discs or slides are substituted. The Figures show a section and end elevation of one modification. The ordinary tube, with three

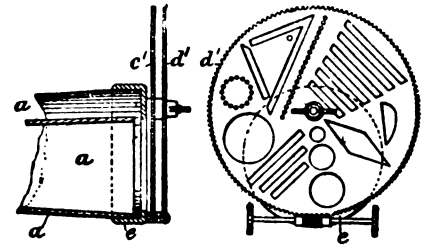

reflecting-mirrors *a*, *a*, *a*, is provided with an end cap *e* on which are mounted, to be turned by tangent screws, discs c^1, d^1, one being a colour disc and the other a diaphragm with a number of devices cut out. In other modifications, the discs may be varied as to their movement and construction, and combinations of several colour and pattern discs may be employed. Binding-arrangements may also be provided, such as the wing nut shown, for fixing the discs in any required position.

3782. Taylor, F. March 12.

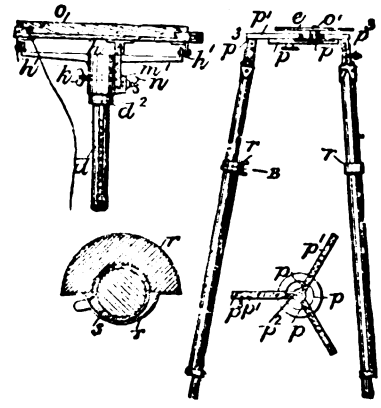

Tripod stands.—Relates to metal stands for cameras &c. consisting of a tripod base, on castors, in which slides a stem *d* having ratchet teeth and a spring catch or rack teeth and a pinion for adjustment. The table *e* is pivoted by lugs h^1 to a bracket having a socket fixed by a screw *k* or revolving on the shoulder d^2 of the stem *d*. An annular adjustment is obtained by quadrants pivoted at *h* and clamped by the screw *n* in the socket m^1. The table may have a sliding part *o* and a clamp for fixing the camera. In another form, the table *e* rotates on a pin o^1 or in grooves in the tripod head *p*, which has three arms p^1, hinged or sliding in grooves p^2. Lugs p^3

Digitized by Google

on the arms p^1, or the arms themselves, are pivoted between plates on the upper part of the three legs. The lower part of each leg lies in a hollow in the upper part, and is connected to it by bands r, r. On rotating the lower part the cam s causes the two parts to be firmly locked. The legs are provided with reversible tips for indoor or outdoor use.

4139. Hicks, J. J. March 17.

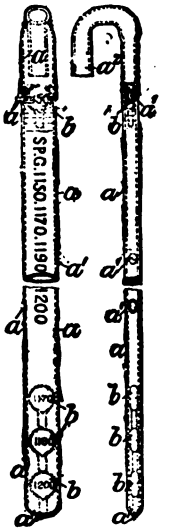

Specific-gravity estimating apparatus for liquids. A series of specific-gravity "bubbles" b, b, either marked with numbers or distinguished by colour or shape, are introduced into a glass casing a with perforations a^1 for the admission of the liquid. The casing may be either a round or flattened tube, the "bubbles" being placed one above another, the lightest at the top, or it may be wide so that they may lie in bulb at the bottom, or a large bulb may be formed at the bottom for this purpose. The tube may also be formed open at the top and bottom, so as to act as a "pipette" for taking samples of the liquid, and a hollow or solid hook a^2 may be formed at the top. Enamel may cover part of the tube to render the "bubbles" more clearly visible. The casing may also be formed of three parallel glass rods connected at the top and bottom, the "bubbles" working in the space between.

4163. Berger, J. H. March 17.

Proportional compasses; protractors. — Consists in various detailed improvements. (1) The slide blocks D, Fig. 1, for the central pivot binding-screw C, have extended slotted limbs d, d with binding-screws d^1, d^1, thus relieving the screw C of the work of retaining the parts in adjustment. (2) The points a, b of the instrument are at right-angles to the limbs A, A, B, B. The latter limbs are rather shorter than the former, and the points flattened at one side so as to fit together, Fig. 2, or allow of opening in either direction. This method also prevents inaccuracy from wear. One of the points may be made adjustable. (3) The central pivot of the instrument is provided with a point c which may be screwed into the centre pin C. (4) The sliding block of the limb B is provided with a protractor scale E, and the sliding block of the limb A with a pointer F.

FIG. 1.

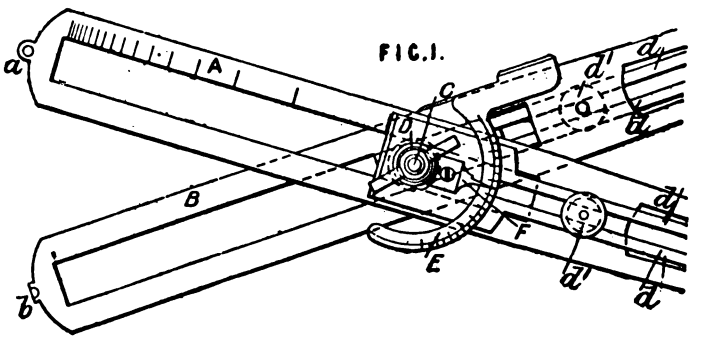

FIG. 2.

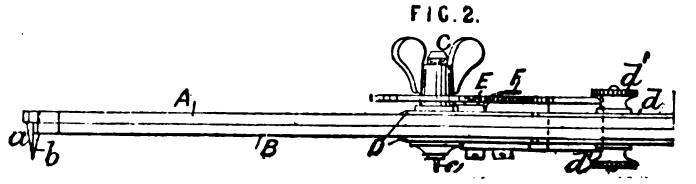

Digitized by Google

4212. Hicks, J. J., and **Salt, T. P.** March 19.

Thermometers. — The invention is more especially applicable to clinical thermometers, and consists in introducing a layer *b* of ruby or other coloured glass backed by enamel in the glass tube behind the bore *a*; by this means an ornamental appearance is given, while the scale, if marked on the glass, and the liquid in the bore are more clearly seen.

4272. Cooper, A. J., and **Wigzell, E. E.** March 20.

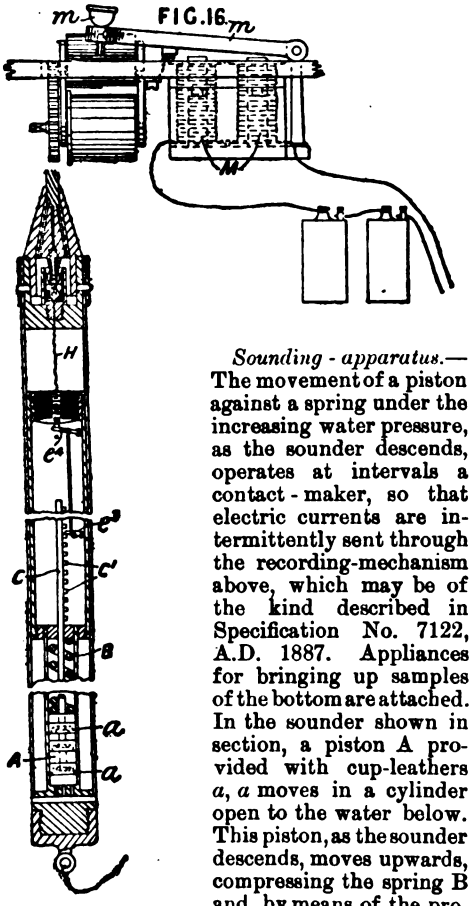

Sounding-apparatus.— The movement of a piston against a spring under the increasing water pressure, as the sounder descends, operates at intervals a contact-maker, so that electric currents are intermittently sent through the recording-mechanism above, which may be of the kind described in Specification No. 7122, A.D. 1887. Appliances for bringing up samples of the bottom are attached. In the sounder shown in section, a piston A provided with cup-leathers *a*, *a* moves in a cylinder open to the water below. This piston, as the sounder descends, moves upwards, compressing the spring B and, by means of the projections C¹ on the stem C, reciprocates a lever e^3 which is coupled to a similar one e^4, which operates a contact-maker such as shown. A conductor H from the contact-maker runs up the centre of the cable which is protected by two layers of wire which are used to complete the circuit to the recording-mechanism on board the vessel. Various other methods of operating the contact-maker may be employed. One form of recording-mechanism is shown in Fig. 16, in which an armature *m* is drawn down by the electromagnet M each time the circuit is made. This armature carries an ink punch which marks a moving paper band at intervals, double marks being made at, say, every ten fathoms to facilitate reading. Other forms may be employed. The sounding-line is wound on a winch, the barrel of which is in circuit with the outer wire of the line which carries the return current. The barrel is journalled in a metal bush as usual at one end, but in an insulated bearing at the other. The bracket supporting the journal is insulated and is in circuit with a metal bush surrounding the insulating-bush on the journal. This metal bush is connected up to the core of the line in order to complete the circuit. The sand-gripper is calyx-shaped, and on it rests a weight. When the sounder reaches the bottom, the cup is dragged along and collects a sample, and on being lifted the weight rests on the mouth of the cup, and so prevents the sample from being lost.

4405. Higgins, C. M. March 22.

Ruling-pens, filling. Relates to the construction of stoppers for ink bottles &c. combined with a quill or sponge &c. for filling ruling-pens, the heads of which are moulded from an easily-fusible composition. The head *m* is formed with a taper handle and is moulded around the plug K. This plug carries a quill *r* or a wire with a sponge or the like attached. Cork, soft wood, rubber, leather, or an equivalent substance may be used for the plugs *k* and the lining of the caps. The moulding-composition is preferably made from equal parts of resin and silica, but sulphur combined with a powdered material or any other solidifiable substance may be used.

FIG 7

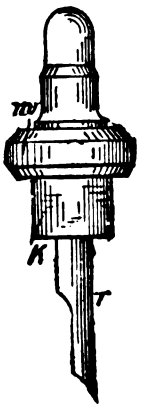

4545. Hughes, W. C. March 24.

Lantern microscopes. — The body A is hexagonal or octagonal, and on three sides in succession a "Gilchrist" projector C, a lantern microscope, and an ordinary projector are placed; the whole resting on rollers swivels about the centre of a table B. A click ensures accurate centering. The triple condenser E of the lantern microscope has its lenses plano-convex, double convex, and meniscus, the combination being such that edge rays may not be lost. An alum cell F is

Digitized by Google

interposed in the path of the beam to absorb the calorific portion. The sub-stage fittings G are of standard size. A mechanical stage H is employed with lateral and vertical traversing-screws. The

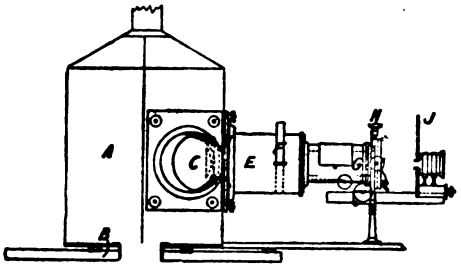

objectives J may be those of table microscopes, or of special curvatures for obtaining a flat field. The revolving diaphragm is brought up immediately behind the object. For packing, the base-board is made detachable.

4668. Le Patourel, J., and **Hyams, S.** March 27. *Drawings to Specification.*

Barometers.—The instrument is constructed on the principle of the sympiesometer, but the end of the tube usually left open to the air terminates in a hermetically-sealed bulb.

4835. Schröder, H. L. H., and **Stuart, J.** March 29.

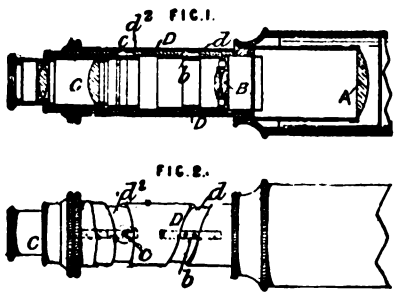

Telescopes.—Relates to the arrangement and construction of the eye-piece, erecting-lens, &c. The rays from the object glass, which is of the ordinary achromatized form, pass first to the collecting-lens A, Fig. 1, and then to an achromatized erecting-lens B; after this they pass to the eye-piece C having two lenses, preferably plano-convex and convexo-plane respectively, the second being achromatic. The lens B can be traversed to alter the magnifying power, and the lenses C to focus the image, and these adjustments are obtained simultaneously in the following manner:—The lenses are mounted in independent tubes and are provided with blocks or rollers *b*, *c* working in cam-grooves *d*, d^2 in the outer rotary tube D, Figs. 1 and 2. The groove *d* is helical, while the groove d^2 is so curved as to give the necessary focussing-adjustment for the different positions of B.

5111. Barrodale, T. H. April 6.

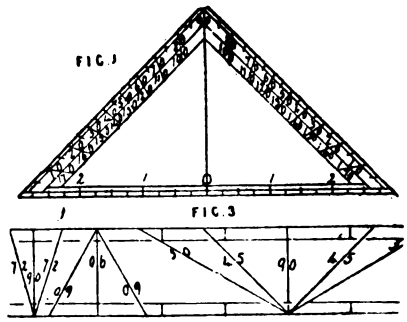

Squares; protractors; rulers; scales.—Consists in marking protractor and linear scales on set-squares, rulers, &c., so that the common vertex of the angles coincides with the zero of the linear scale, by which means any required length can be set off on one enclosing line of the angle and of its supplement by one adjustment of the instrument. Fig. 1 shows a set-square thus constructed, and Fig. 3 a ruler with various angles radiating from different points.

5176. Cardwell, W. A. April 7.

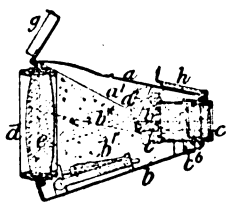

Opera, field, and marine glasses. — Relates to improvements on the invention described in Specification No. 17,107, A.D. 1887. The instrument is constructed to fold up into smaller compass when not in use. The top *a* and bottom *b* are hinged to the eye-piece *c*. The sides are formed by overlapping flanges a^1, b^1, and a connecting-web b^6. The flanges engage each other by slots and pins a^2, b^2. The objectives *d* are hinged either to top or bottom, and are held upright by a spring-lever *e*. When folded up, the casing is completed by a hinged front *g*, and a rear one *h* with spring catches. The latter cover may be on a double hinge so as to lie flat on the casing when turned back. The focussing is effected either by a screw c^5 with a milled head c^6 or a worm and worm-wheel. In modifications, the two parts of the casing are hinged to the front instead of the rear of the eye-pieces, and the cover *h* is replaced by leather flaps attached to the casing, and to crossed arms from the flanges a^1, b^1. Further, the casing may be curved, to fit better in pockets.

Digitized by Google

5194. Schröder, H. L. H., and **Stuart, J.** April 7.

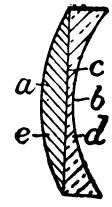

Lenses.—Consists in combining a plano-convex lens *a* of high refractive but low dispersive power, and a plano-concave lens *b* of low refractive, but the same or higher dispersive power. The two lenses are cemented together at the surface *c*, which may be very slightly curved if desired. By this construction an achromatic lens producing a real image may be obtained with the surfaces *e*, *d* concentric or very nearly so and having a large flat field. Such lenses may be employed singly or in combination.

5297. MacLellan, J. A. April 10.

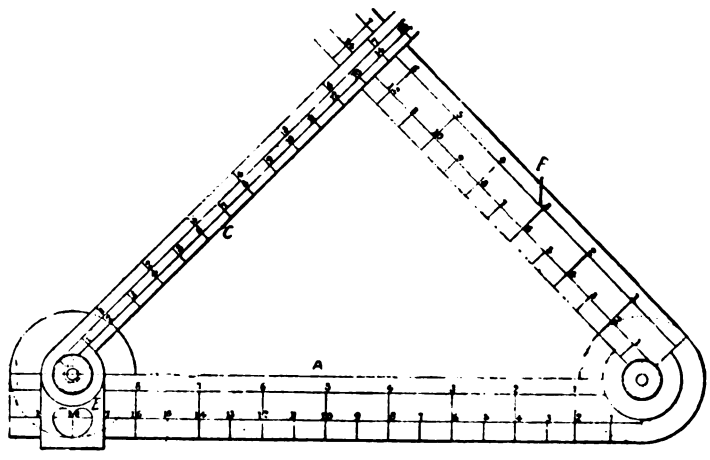

Departure rules. — Relates to an instrument for determining distances — for example, on board ship, where the distance of an object on shore is required. At one end of a graduated rule A is pivoted an arm B, while a second arm C is pivoted to a sliding piece E, all the movable parts being fitted with clamping-screws. The rule A is placed parallel to the keel of the vessel and the arm B adjusted to the bearing of the distant point. The ship is then kept on a straight course at a known speed for a certain time, after which the arm C is adjusted to the new bearing and the piece E moved to read on the scale of A the distance travelled by the ship. The point of intersection of the arms then gives the distance of the distant object from the two points of observation, and by turning the arm C at right-angles to the rule A and making it cut the same point on B the distance of the ship from the distant object when abreast of it may be read off. Compass dials may be fitted at the joints of the arms for taking the bearings of the distant object.

5312. Thompson, W. P., [*Draper, D.*]. April 10.

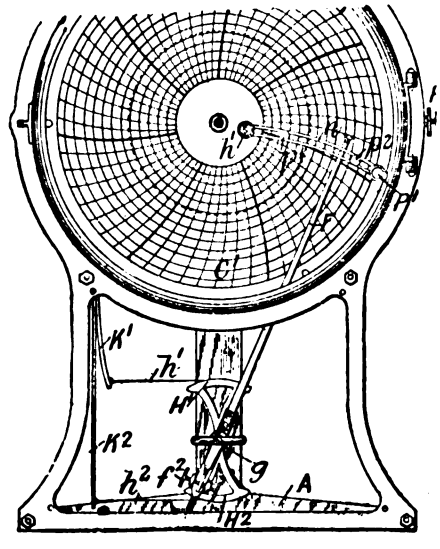

Thermometers.—Relates to self-registering alarm thermometers. The diagram is traced on a card C^1, rotated by clockwork and ruled for temperatures and time, by the arm F mounted loosely on a spindle *g*, but gripped between regulating-screws f^2 on a bracket mounted on the spindle. Two quadrants H^1, H^2 are attached adjustably to the spindle by set-screws, and are connected with bi-metallic strips K^1, K^2 by wires h^1, h^2, the strips being reversely arranged so as to tend to rotate the arm F in the same direction. The terminals of an electric alarm are connected with the binding-posts P^1, circuit being completed by the arm F coming in contact with platinum points on the adjustable stops p^1, p^2. These stops can be fixed by set-screws beneath at any required point in the slotted plate *n*, which is curved into an arc, having its centre at the spindle *g*. When the front of the case of the apparatus is open the slotted arc is turned back out of the way of the arm, and when closed the adjusting set-screws are inaccessible, so that tampering with the apparatus is prevented.

Digitized by Google

5440. Bennett, J. F., Mann, W. G., and **Spencer, L.** April 12.

Mathematical drawing-instruments.—Relates to compass-like instruments for drawing volutes, ellipses, &c. as described in Specification No. 9876, A.D. 1884. The leg A is non-revolving and attached to the foot A^3 by ball joint; the shank is of triangular or other suitable section and carries a templet D adjustable thereon, having a groove or raised fillet for guiding the guide leg C. The head joint is of special construction so as to keep the leg B and the guide-leg C in a fixed relative position, but to allow of their free play with regard to the leg A. The top of the leg A is cylindrical and fits into a socket in the piece A^4. On the guide-leg C is an adjustable point F, which travels along the groove or fillet on the templet D. The action is as follows:—The proper templet D having been selected, the legs B and C are set at the required angle and the guide point F moved round the groove or fillet, when the pen or pencil on B traces the required curve.

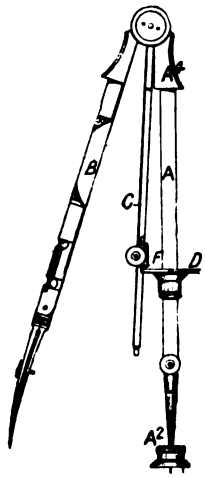

5652. Dixon, S. April 17.

Spectacles.—Consists in forming a hinge C, preferably a knife hinge, in the middle of the bridge B, B so that the glasses A, A^1 will fold in face to face. The wings D, D^1 are also jointed in the well known way so as to fold in, either as shown, or between the glasses. A loop F pivoted to one side near one wing hinge engages with a hook E formed near the other wing hinge, and secures the frames in their folded position.

5688. Fuller, H. F. April 17.

Colours, matching.—Relates to an appliance, for use by artists for facilitating sketching, on the surface of which are painted the primary colours, all required combinations thereof, or any required tints or textures, in adjacent sections in such a manner that the tints of any object may be matched by holding the device in the line of sight, and turning it about until the required section comes in line with the tint to be matched. Each section is marked with a letter so that a pencil sketch may be marked therefrom, and the colours filled in at leisure. The device has marked thereon an index specification of the colours, and of the means for producing them. Any suitable form may be given to the device, a handy shape being a flat tablet or card, which may be open in the middle, along the edges of both sides of which the tints are marked.

5690. Arnold, J. April 17.

Thermometers.—Consists of a spring tongs-like clip A to be fitted over the thermometer B, so as to protect it from injury without interfering with the reading of the scale.

5770. Townshend, E., and **Thompson, T. H.** April 18.

Stands.—Relates to telescopic standards for lamps and other articles. To the lower end of the sliding tube A are hinged three grippers E, while on the upper end is a collar in which is pivoted a lever C, which operates a rod D with a conical plug X at its lower end. The standard is adjusted by pressing inwards the lever C, which lifts the rod D and raises the plug X clear of the grippers E, leaving the tube A free to slide in the standard B. On releasing the lever C the spring F depresses the rod D, thereby causing the plug X to force the grippers against the standard B and secure the tube A in position.

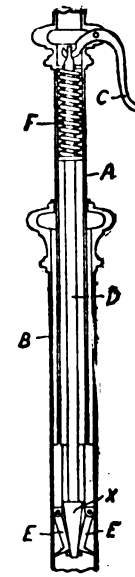

6059. Paxton, G., and **Curry, W.,** [*trading as* Pickard & Curry]. April 24.

Goggles.—Consists in constructing goggles as pince-nez. The cups D, D, with plaquets F, F for

Digitized by Google

holding the glasses accurately before the eyes, are furnished with nose-pieces H and are connected

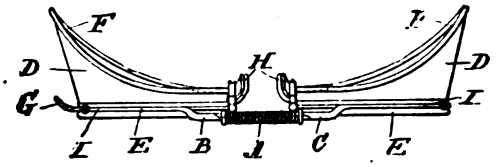

by a spring bridge A, B, C attached to the frames I which pass round the front E of each cup. G is a cord loop.

6076. Gross, A. April 24.

Compasses, magnetic, alarms for. The bowl is insulated from the binnacle and the pivot A from the bowl, but both bowl and pivot are in the circuit of an electric alarm. A fork C rests on a platinum wire *l* running round the top of the bowl and connects the bowl with a central hub formed of three pieces D, E, F, which screw together and clamp the glass and fork. From the bottom of D two gold wires G diverge. Their divergence may be varied by moving a sliding hand, for which purpose a pinion and rack I, J are actuated by a knob K at the top of the hub. A bent platinum wire L projects upwards from the magnets between the wires G. The central hub is turned till the wires G are equidistant from the course to be steered, and the knob K is turned till the wires are separated, according to the deviation to be indicated. If the ship deviates too much the wire L touches one of the wires G and the alarm is sounded. A disconnecting-switch is put in some convenient part of the circuit.

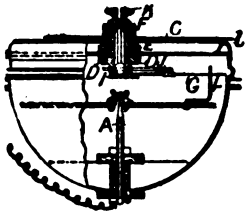

6134. James, S. H. April 25. *Amended.*

Sounding-apparatus. — The sinker may be in various forms, the essential feature being that it should act like a kite, taking up a position with the towing-line at a definite angle to the horizon. Fig. 2 shows a convenient form, the lower part having a shoe of iron so as to be heavier than the upper, which may be of wood. The line is attached at *a* and *b* and connected with the main line L by a comparatively weak connection *s*. When the sinker strikes the bottom, the jerk breaks *s* and the sinker is then drawn along by the previously slack connection P; the altered position causes it to rise to the surface. Fig. 11 shows another form of sinker adapted to continuous sounding. The line is attached to the bent bar M pivoted at H. When the sinker strikes the bottom it tilts into the position shown in dotted lines, then again sets itself and bumps once more on the bottom, and so on. Two of the sinkers may be employed, a large one for sinking the line, and a small one at the extreme end for bumping along the bottom. The sudden jerk of the sinker on the

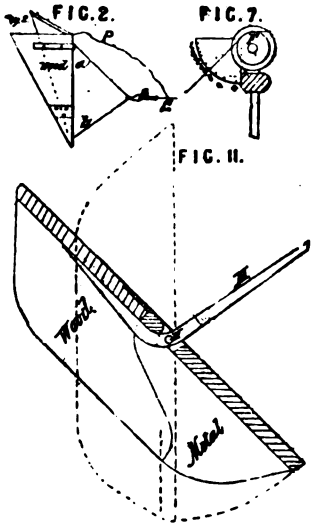

bottom having broken the connection necessary to its "kite" action, the tension on the line immediately diminishes; by attaching the line to a dynamometer an alarm may be caused to sound, the necessary movement, such for instance as the closing of bellows connected with a whistle, being obtained from the dynamometer. The iron shoe on the sinker may be indented to take a sample of the bottom. The line is led from a winch (preferably a screw-threaded drum round the threads of which the line is wound and prevented from slipping by a close-fitting cap), over a pulley F, Fig. 7, adjacent to which is a quadrant graduated in sines. The product of the length of the line run out, shown by a counter connected with the winch, and the sine of the angle made by the line with the horizon gives the depth.

6383. Havill, G. April 30.

Rulers.—To prevent pencils, rulers, and like articles from rolling off sloping desks and the like, they are fitted with clips as shown. The ends of such a clip may engage a piece of india-rubber or ink-eraser or other article. The clip may be used alone, and it may be of any shape.

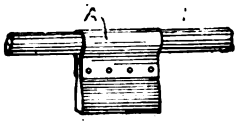

6923. Methven, J. May 9.

Photometers.—The air supplied to photometric lamps is dried on its way to the lamp by being forced by a fan or other motor over or through trays containing desiccating-material, such as quicklime broken into small pieces. The lamp must be so arranged that the external undried air cannot come into contact with the flame. The

Digitized by Google

desiccated air supply is controlled by a regulating cock or valve. The gas or vapour supply may be similarly dried. The result of the desiccation of the air supply and its regulation by a cock is a constant or standard light, the flame being rendered independent of the varying barometric and thermometric conditions of the atmosphere.

7067. Fuhrmann, A. May 12.

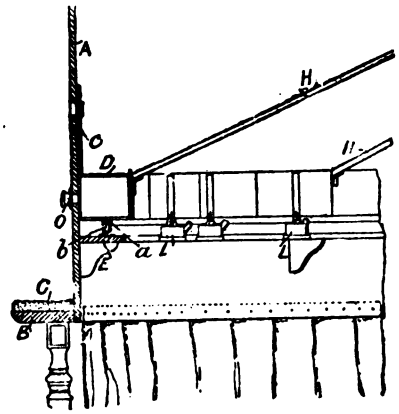

Stereoscopes for exhibiting panoramic views. The spectators sit round the outside of a circular casing A provided with eye-pieces O. Inside the casing a ring of stereoscope boxes D connected by a circular rail *a* travels round over rollers *b* on a circular shelf E. All the views thus pass before each spectator. The motion is intermittent so that time is given for inspection. The boxes are connected by rods H to a sleeve on a central pillar, where the actuating-mechanism is placed. Behind the boxes lamps L are placed to illuminate the transparencies. The names of the views appear on boards *c* through slots in the casing A.

7105. Cooper, W. C. May 12.

Compasses, drawing.—Two tubes *a*, *a* of bent sheet metal are hinged together, the tubes being on opposite sides of the hinge plates, so that the pencil *b* and pointed rod *c* can cross one another as the hinge is opened. As the pencil *b* is cut down the rod *c* can be drawn back to keep the legs even.

Proportional compasses.—By using two pencils sharpened at both ends proportional compasses are obtained.

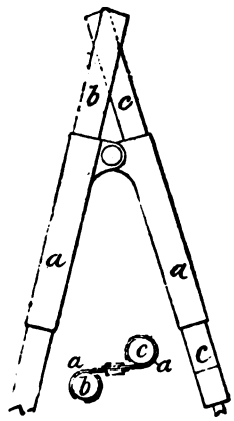

7110. Barton, W. May 12.

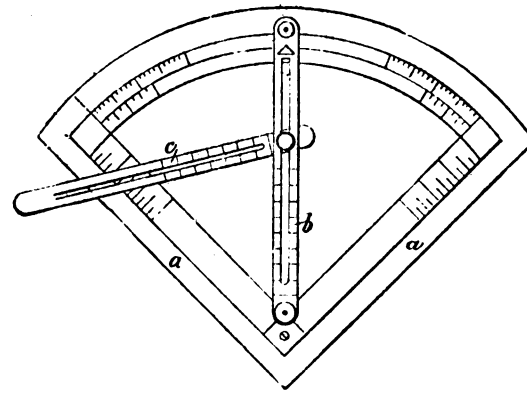

Departure rules; course indicators.—Relates to instruments for use by ships' masters, pilots, and others, for finding the distance a ship will pass from a point on land, for checking the course, and for enabling the ship to pass at any required distance from an object. In one form the instrument consists of a quadrant *a* having a pivoted radius arm *b*, on which slides and turns a second arm *c*. The sides of the quadrant and the arms are graduated in distances to scale. The sliding arm is pushed out on the radius bar to the known distance of a fixed object. If the radius bar is set to the angle between the ship's course and the bearing of the object the zero radius of the quadrant reads on the sliding arm when at right-angles the distance at which the ship passes the object. *Vice versâ*, the distance of passing being given, the required course may be found. To check the course, the sliding arm kept perpendicular to the zero radius of the quadrant is brought back the distance sailed since a previous observation. If the course has been kept the angle read by the radius bar will be that simultaneously observed. The quadrant may be replaced by a single fixed bar parallel to the lubber line and the angle be got by sighting.

7124. Hall, B. G. May 14.

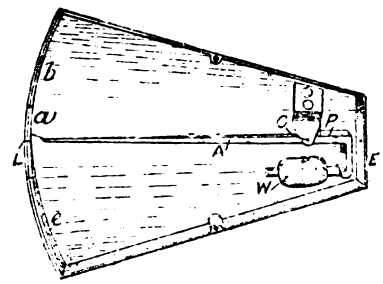

Clinometers.—Consists in the application of a counterbalanced index arm or pointer for measuring vertical angles. The index arm A is pivoted at C and has a pointer *a* at right-angles to it, parallel to the pivot C. The extension P of the

Digitized by Google

arm A is bent round and carries an adjustable weight W for bringing the arm A accurately horizontal. The distant object is observed through sights E and L, and the position of the index *a* on the scale *b*, *c* gives the required angle.

7348. Hughes, W. C. May 17.

FIG. 4.

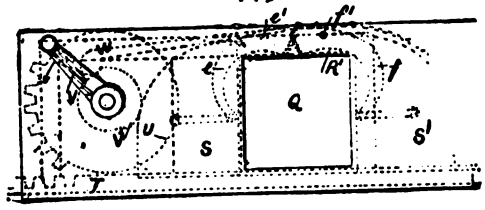

Magic-lanterns.—The slide stage is carried by a part which telescopes into the main body, and the objectives are fitted to a flexible concertina-like extension. The footboard is hinged in the middle. The condensers are rectangular or square in order to obtain as large a field as possible. For changing the views a double slide carrier is employed, moved, so as to bring either aperture Q into position, by the handle V through the segmental wheel U and rack T. A cam V^1 is attached to the spindle of the wheel U, which operates the lever W and closes the shutters S, S^1, during the change of the slide, by means of the intergearing toggles e, f pivoted at e^1, f^1.

7357. Crampton, T. P. C. May 17.

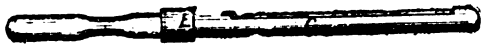

Thermometers.—Either the whole thermometer is coated with a thick electrolytic deposit, leaving only a reading window, or the bulb only is thus coated and the stem protected by a slotted tube C of ebonite or metal cemented on. This casing may be strengthened by a rigid ring E between the bulb and stem parts. The stem end may be loaded so as to strike first in case of falling. To further lessen the danger of falling, india-rubber rings may be passed over the stem.

7399. Leigh, H. H., [*La Cour, P.*]. May 18.

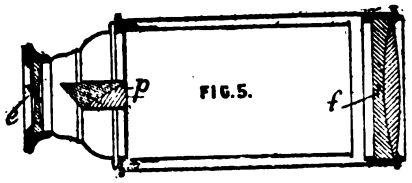

FIG. 5.

Telescopes for observing signals which are transmitted according to the Morse code by a lamp apparatus. Wide and narrow slits corresponding to the dashes and dots of the code are formed in a band drawn in front of a lamp by rollers and gearing &c. The light passes through the slits and a lens, and is dispersed by prisms into a series of overlapping spectra. A certain portion only of the transmitted rays is visible to a distant observer, and these when viewed by the naked eye appear like a light spot, but when viewed through the telescope a full-sized image of the slits is visible. For this purpose the telescope is fitted with prisms *p* which may be placed inside or outside the object glass *f*. The apparatus may be used for military and marine signalling, for indicating a ship's course or a definite direction.

7411. Horn, A. May 19. *Drawings to Specification.*

Saccharometers.—Beside the ordinary scale of specific gravities a second scale is provided showing corresponding percentage weights of sugar.

7476. Lysaght, G. J. May 19.

Tripod stands.—Consists in the combination with a walking-stick, artists' tripod, or the like of an attached case 2 with compartments 3 for holding sundries. The case may be rolled round the stick &c. and secured by a strap 4 or a stud.

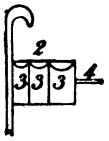

7596. Fletcher, J. May 23.

Protractors. — The instrument consists of an outside graduated ring A, within which turns the piece B, having a diametric straight edge, fitted with interchangeable scales B^2. Verniers E, E are fitted to either side of the piece B, and for fine adjustment the ring A and piece B may be connected by a clamp D and screw d^1. Two rollers F, F, attached to a common axis F^1,

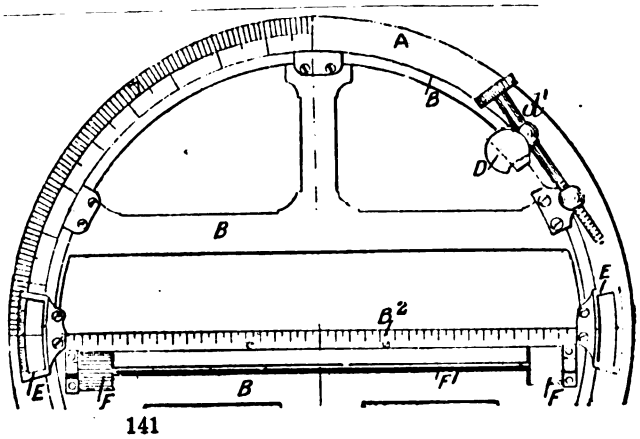

Digitized by Google

are also provided so that the apparatus may be moved parallel to itself.

7695. Coad, T. May 25.

Lenses for distributing light. A coned body is cut into straight facets A and B, the latter being at a greater angle to the axis than the former. The base is slightly convex. The rim C may be fitted into a metal collar.

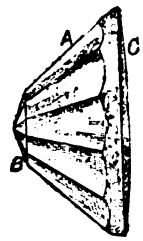

7884. Trotter, A. P. May 30.

Thermometers. — Relates to means for indicating at a distance the readings of thermometers and other instruments where the indicator and transmitter are connected by a tube containing fluid or by a wire; the object is to avoid errors arising from the means of connection being exposed to varying temperatures. The bulb is connected by a fine tube C with a U tube A partially filled with mercury, the bulb, fine tube, and up to the mercury in the tube A being filled with alcohol or other liquid. By the side of the tube C runs an exactly similar tube, ending in a like U tube and filled with spirit and mercury; this is not connected with the bulb at its other end, but is sealed. The scale B of the thermometer is adjusted by a rack and pinion G to bring the mark H opposite the mercury level in the compensating-tube, or the scale B may be arranged to be adjusted automatically by floats or otherwise. In a bimetallic or like thermometer, where a wire connects the metal strip with the indicator, a duplicate wire is provided, fixed at one end and attached at the other to the movable scale or to a mark to which the scale is adjusted. Each tube may be fitted with a float, to which are connected pens for tracing a record on the revolving drum. Electric contact-wires may be sealed into the U tubes and pass to terminals L, L, M for sounding an alarm in case of a rise of temperature above a certain point.

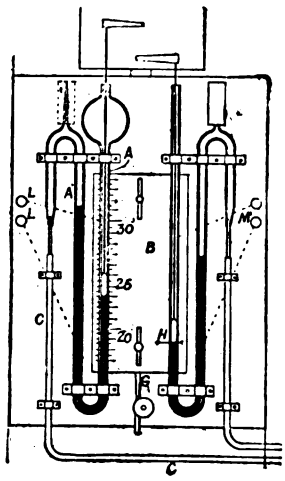

7987. Farr, G. C. May 31.

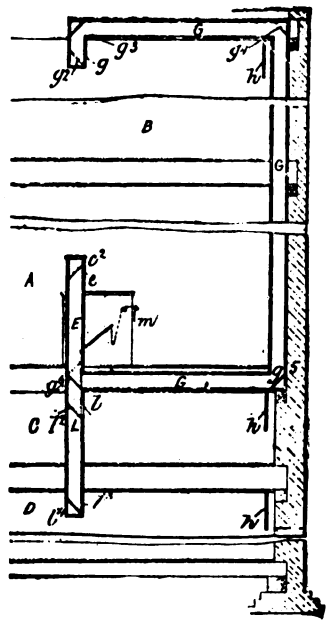

Reflectors.—Relates to room-to-room observers for use in factories, houses, ships, &c. The various rooms B, C, D are connected to the room A, in which the manager or captain sits, by tubes E, G, L furnished, if necessary, with mirrors e^2, g^6, g^5, g^4, g^3, g^2, l^2, l^4, &c., the last of each set of mirrors being placed before openings g, l, l^2 in the tube, which receive the reflection from the mirrors h, h and communicate them to the inspector through the opening e. Some of the mirrors, *e.g.* l^2, g^6, are pivoted so that they can be turned back when they would interfere with the passage of light to the reflectors of another room, and they are under the control of the inspector by means of arrangements m similar to bell-pulls. The mirrors h are capable of vertical and horizontal adjustment in a similar manner, so that any part of the room under inspection may be observed, and they may, if desired, be convex, so as to include a larger field. A magnifying-glass may be fitted into the opening e for the sake of closer inspection.

8027. Mitchell, C. T. June 1.

Thermometers.—In order to read the thermometer from behind, the back is perforated by a series of transverse slots corresponding to divisions on the front scale, or the whole tube is exposed by a longitudinal slot along which graduations are marked by notches, pins, or bridges. The Figure shows notches at every 10th degree on one side and every 30th on the other. The wooden carrier is made in halves united by screws g, h. A self-registering thermometer set by gravity is suspended horizontally from a bar, such as a window sash, by two hooks, one fixed and the other suspended by a

Digitized by Google

chain which passes through a hole in the sash, and is hooked on a pin on the upper side. To set the

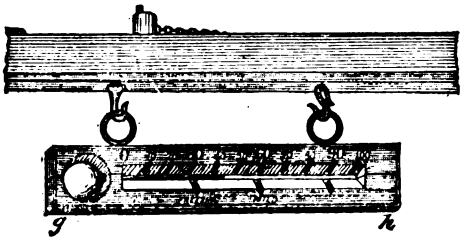

thermometer the chain is unhooked and let down. The chain instead of hooking may be attached to a hinged bar, slide, or drum.

8068. Simpson, W. S. June 1.

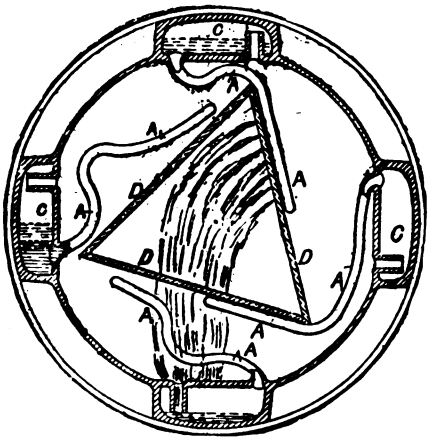

Kaleidoscopes.—Relates to a kaleidoscope object which may be used in connection with coin-freed apparatus, such as that described in Specification No. 11,621, A.D. 1887. The Provisional Specification also refers to the use of the kaleidoscope in connection with advertisements and the delivery of goods, sweets, &c. Perforated tubes A, A are connected with reservoirs C, C containing liquid; when the apparatus is placed in the position shown with reference to the mirrors D, D, D and rotated, the liquid issues from each of the perforated tubes in turn, descends in the form of a cascade, &c., and flows into the reservoir below.

8381. Lynam, P. J. June 8. *Drawings to Specification.*

Range-finders.—Instruments connected by a cord forming a base line are mounted on swivels so that the cord, when tightened, brings them approximately into the required relative adjustment to the base line.

8599. Palmer, W. June 12.

Squares. — Relates to T-squares with movable blades. The blade B and stock H are held together by a bolt S and nut D with a convex spring washer A pressing on the blade. The blade is slotted to the end so that it can be slipped off the bolt without removing the nut D. The friction of the washer is taken by a flat spring C instead of by the nut, so that the latter has no tendency to turn with the washer and blade.

8621. Popplewell, W. W., [*Bechtold, A. M.*]. June 12.

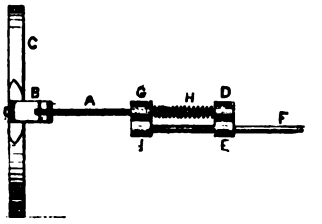

Spectacles.—Relates to a method of attaching the wings. A guide-piece A, square in cross-section, is hinged at B to the lens or lens frame C, and carries at its end a collar D with an eye E projecting below. The wing F, which is curved at the end to pass round the ear, works freely through the eye E and carries at its end a collar I with eye G projecting above, and riding freely on the guide-piece A. Between the collar D and eye G a spring H is coiled round the guide A. The arrangement of the parts may be slightly varied.

8726. Lowthime, D. A. June 14.

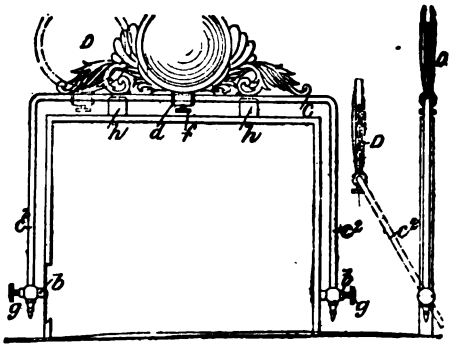

Graphoscopes.—A lens D in an ornamental setting slides by means of a socket *d*, with set-screw *f*, on the horizontal bar C of a wire frame

Digitized by Google

the legs c^3 of which slide through holes in pivots b bearing in the sides of the frame, or in metal plates attached to an ordinary wooden frame, and having set-screws g. The lens may be slid about and placed over any part of the picture or photograph, but is prevented from passing behind the frame by the stops h, h.

9293. Chase, H. A. June 26.

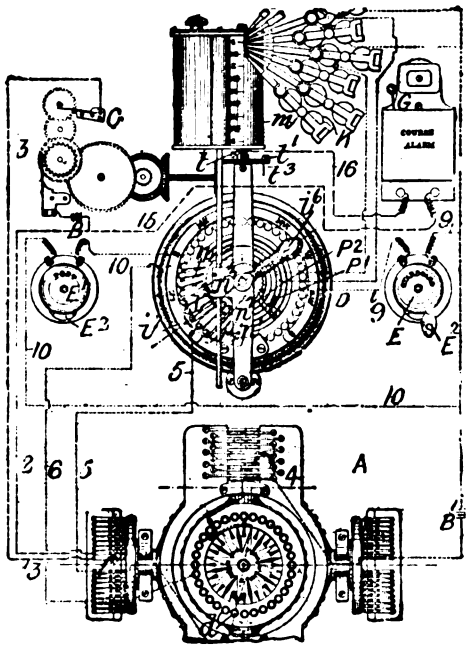

Compasses, magnetic; logs.—Relates to apparatus for indicating and recording the movements of a needle &c., specially designed for use with the magnetic compass. Round the card of the compass A, say at every point, are a series of insulated contacts d^1 and a continuous contact ring (not shown). The contacts d^1 are connected by wires (for example 5, 6) with corresponding contact-points on the dial D, and the continuous ring by a wire 4 with one pole of the battery B^1. Flexible or rubbing contacts are provided at the gimbal joints for the circuit wires, so that the free movement of the compass is not interfered with, and in order to render the card very steady it is supported by an annular float resting in liquid and connected to the card at some distance from the centre. An electromagnetic device is placed beneath and carried by the compass bowl by means of which a metal bar, turning with the card so as always to be parallel with the needle, may be raised to make contact with the metal ring and the contact-point d^1 to which the needle is then pointing. The circuit wires 2, 3 for this electromagnetic device pass to the poles of the battery B, and one includes the clockwork contact-mechanism C. In this way a current is sent at definite intervals, and the circuit closed for the battery B^1. The recording-device may be of various forms; that shown in the Figure consists of a series of markers caused to make a record on the clockwork-revolved drum m by means of the magnets K. As the deviation of the compass will not generally be more than one or two points to either side of the course, only about 5 such markers are provided, and the circuit closed for these by bringing the handle i^6 into the position required. The drum is moved longitudinally on its axis through rack and pinion gear from the handle i^6, so as to bring the markers to the required part. A series of five contact-fingers i^3 connect the corresponding contacts of the dial D with the 5 rings marked P^2, P^1, Course, St. 1, St. 2, and thence to the respective markers, these fingers moving with the handle i^6, and a pointer i^7 showing the position of the handle. Additional contacts n, n^1 may be provided at either side of the fingers i^3, and connected to rings n^2, n^3, and thence by conductors 9, 10 respectively to bells E, E^1 and drop-down signals E^2. Thus if the ship deviates more than 2 points port or starboard of the course an audible and visual signal will call attention to the fact. In order to show when the ship has remained on one course for a definite time an alarm G is provided, the circuit 15, 16 for which is closed by a projection t^1 on the disc t^3 (driven by the clockwork) coming in contact with a terminal t. The projection t^1 may be fixed at different points on the disc, so as to give the alarm at the end of any required time. Additional markers may be provided worked from the log and revolution counter. To prevent injury to the apparatus by turning the handle i^6 when one of the markers is in contact with the drum, the handle may be enclosed in a box the opening of which breaks circuit. When an alarm only is required in case the vessel deviates, the apparatus may be much simplified. The handle in this case moves a shield covering about 5 points of the card, which prevents the closing of the circuit between two rings round the card, except when the vessel has deviated.

9315. Henninger, F. A., and **Fyfer, J. T.** June 26.

Spectacles and eyeglasses; reading-glasses.—Relates to a means for tightening the frames on the glasses without the necessity for the usual grinding. The part b, Figs. 3 and 5, is formed or fitted with a screw pin c and slides into the concave end of the part a, the screw being passed through the slot d. The surface at d is roughened to give a proper bite to the

FIG. 3.

FIG. 4.

FIG. 5.

Digitized by Google

nut *e*, which, when the frame has been drawn close round the lens, is screwed tight down. Fig. 4 shows a slightly-modified form of the invention.

9442. Lansdell, W. J. June 28.

Squares; rulers; French curves; centrolineads.—Consists in constructing centrolineads, squares, rulers, French curves, and similar instruments with a raised rib round the drawing-edge and elsewhere if desired, so that the recessed surface between does not touch the paper. For instance, in the Figure, which shows a section of a set-square, a rib 1 runs round the edge, and a rib 3 round the central hole 4 as a support, the part 2 between being recessed.

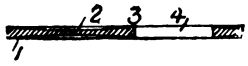

9452. Horstmann, H. June 28.

Barometers.—Relates to means for indicating measurements accurately on dials, applicable to gauges, barometers, and other instruments. Fig. 1 shows the principle of the apparatus as applied to a measuring-gauge. The piece G of which the length is to be determined is placed between the fixed and movable jaws B, C¹, the latter of which is attached to a slide E moving parallel with a screw spindle D into the thread D¹ of which an extension of the rod C¹ extends. By this means the movement of the jaw C¹ is communicated in a magnified degree to the index H. K is a spring for returning the index to zero. In some cases, *e.g.*, in a barometer or pressure gauge of the aneroid type, the movement of the driving part C¹ is not proportional to the quantity to be indicated, and to avoid irregular divisions on the dial the screw thread is formed of varying pitch. The screw spindle may be tubular and of varying pitch, so that by compressing it longitudinally the pitch may be adjusted. Other special adjustments may be made in the case of an aneroid barometer or pressure gauge. A second dial I is also provided, the spindle of the index being connected by a fine wire or hair to the spindle D so that the two spindles turn at any required relative speed.

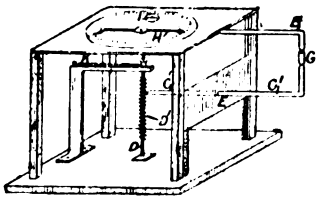

9501. Benson, W. A. S., Lovegrove, J., and Hinton, E., [*trading as* W. A. S. Benson & Co.]. June 29.

Stands.—Relates to an adjustable screw grip for lamp and other standards, and consists of a stuffing-box with an adjustable india-rubber washer. This washer is protected by two metal washers B, B, which are enclosed by the two parts C, D of the stuffing-box. The lower part D screws on to the base, while the upper part C is secured to D by a screw of, preferably, six threads to the inch, so that the sliding tube A is released by giving C a half-turn.

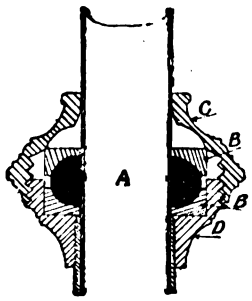

9518. Mavitta, W., [*trading as* W. H. Brown & Co.]. June 30.

Tripod stands.—Each leg is in three parts; the bottom part, which is solid, is pivoted at a^6 between two strips A^3 forming the middle part. It is held extended by a spring catch, and has a spike at each end, so that either end may rest on the ground; the middle part consists of two strips A^3 connected at one side by plates g^{11}, and at the top by a bolt g^3 which, with nut g^5 and plates g^1, forms a clamp to connect the middle and top parts, H being a rubber &c. packing-piece. The strips A^1 forming the top part are connected below by a metal band, and on the inner side of one of the strips is a pivoted lever with a screwed socket for the set-screw F. The head B is shown in plan in Fig. 15. To fix the legs each lever carrying the screws F is turned aside and holes in the strips A^1 are sprung over the pivots b^2; the set-screws F are then adjusted, the legs being held between the lugs B^1 and the ends of the bolts b^3, which are loose in the lugs b^4. In a modification, the bolts b^3 are dispensed with, the set-screws F being made long enough to fill up the space between the strips A^1.

FIG. 15.

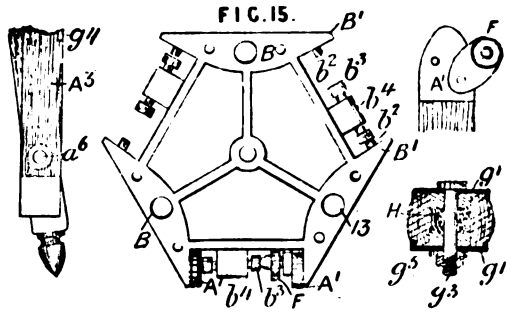

Digitized by Google

9520. Barr, A., and Stroud, W. June 30.

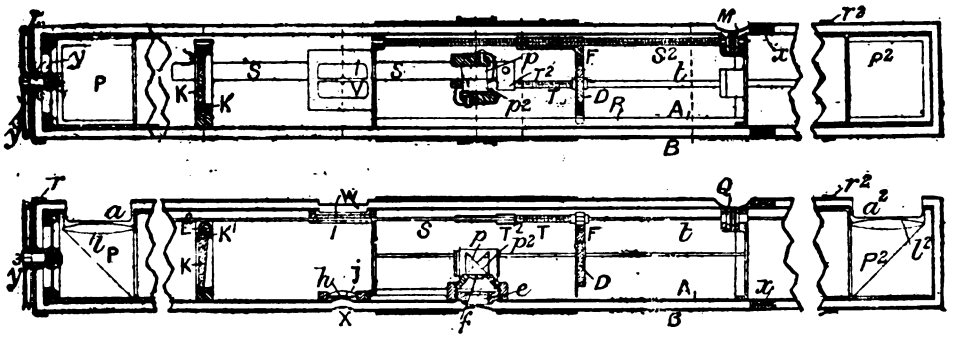

Telemeters; surveying-instruments; speed and direction of motion of distant objects, determining.—Relates to instruments for measuring distances and angles, specially applicable for range-finding, though the invention may be applied to instruments for contouring, taking vertical and horizontal angles, and other surveying operations, for determining the position of a boat relatively to a coast in hydrographical surveying operations &c., as well as for determining the movement of a distant object in direction and velocity, ascertaining the size of a distant object, &c. Various modifications are described, but the Figures show a type embodying the essential features. A tube A is carried within an outer tube B by a centre *y* at one end and a ring bearing *x* placed near the adjusting milled heads M, Q; in this way distortion of the parts during transport, adjustment, &c. is avoided; moreover, by turning the inner tube by means of the head y^3, the various apertures in the tubes may be brought out of coincidence when the instrument is not in use. At either end of the tube A in front of the apertures *a*, a^2 are the reflecting-prisms P, P^2 (the reflecting-surfacing making an angle of 45° with the axis of the tube), combined achromatically with lenses *l*, l^2. At the centre of the instrument are two small reflecting-prisms *p*, p^2 parallel to those at the ends, and cemented to the lens *f*; these prisms reflect the rays of light received from the prisms P, P^2 into the eye-piece *f*, *e*. The arrangement of the small prisms is such that, with correct adjustment of the parts, the image of a distant object is divided between them so as to form a complete image. This adjustment is effected by a prism K of small angle the frame K of which is cut on its outer edge into worm teeth and can be rotated by a worm L^2 provided with a milled head. At the other side of the centre of the instrument is a deflecting-prism D of small angle carried by the frame F, which can be moved longitudinally in the tube on turning the screw S^2 by the milled head M. A scale S is attached to the nut T^2 through which passes a screw T capable of turning freely in the frame F but compelled to move longitudinally therewith; the continuation *t* of the screw T is rectangular in section and passes through a milled head Q so that it can slide therein, but must turn with it. By revolving Q the scale is adjusted with regard to the prism. When the distance of the object is practically infinite so that the rays therefrom are parallel, and the prisms K, D are moved to cause a perfect image in the eye-piece, the mark "infinity" on the scale should be brought opposite the index I. If now an object at a finite distance be observed, the image will appear broken, but the two halves may be brought into alignment by traversing the deflecting-prism F by turning the head M, and the required distance can then be read on the scale S, which is graduated in reciprocals. The scale may, if desired, be marked in angles subtended by the base length of the instrument at the distant point. The fixed index I is preferably placed between a lens *j* and a window W, the scale being transparent, the eye aperture X being so situated that the reading can be taken with one eye, while the other is applied to the eye-piece *e*. The window W is extended below the scale at V, and a small hole *h* made in the lens *j*, so that direct vision is possible for rapidly directing the instrument to the required object. In order to obtain the adjustment for "infinity" with facility, each instrument is provided with two rings *r*, r^2 placed apart at a distance equal to the base length. By observing from one instrument the rings upon another placed parallel thereto, parallel rays of light are obtained. The rings may be placed on the carrying-case, or a short rod substituted. When in use the apparatus may be supported in the hand, or be mounted on a tripod stand; or it may be attached to the nose-block or barrel of a rifle by a swivelling spring clip; it may also be carried on the table of a theodolite for determining azimuths and altitudes, or a small pendulum clinometer may be pivoted in the tube, the scale swinging behind the lens *j*.

9926. Bassnett, T. July 9.

Compasses, magnetic. — The card *g* is fixed to a float *h* pressed upwards by the containing-fluid against the centre *d*, which is carried by a bar *e* mounted on brackets *f* on the bowl *a*. *j* is an agate

Digitized by Google

or the like for the centre to bear upon. The needles *i* may be carried by the float or suspended

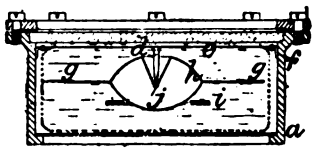

from the card. The centre or the agate, or both, may be carried by a spring to reduce the effect of sudden shocks.

10,053. Reynolds, W. J. July 10.

Compasses, magnetic.—The card is formed by electrodeposition, as described in Specification No. 12,880, A.D. 1887, and covered on both sides with metal or like foil which is pressed between a hard flat surface and a soft yielding surface; by this means it is rendered flat on one side for pointing or otherwise marking the usual devices; the other side is indented. The card is fixed to a double cup-shaped float A, B having flanges C, D for connecting the two parts. The lower cup B is formed with a conical part E at the top of which is fixed the jewel by means of a cup G or otherwise. Flanges F, F project from the bottom of the cone and a disc I of about the diameter of the aperture between the flanges is fitted to the central pin H. This arrangement prevents the pin from being shaken off the jewel. In the Provisional Specification a means is described for preventing the heads of the screws used to attach the card to its frame, or for balancing purposes, from showing on the top of the card. This consists of a skeleton framework to which the card is attached.

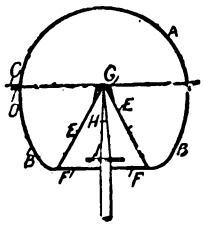

10,101. Peichl, J. von. July 11.

Compasses, magnetic.—Relates chiefly to means of compensating the quadrantal deviation. The compass may be either fluid or on gimbals. If the latter are used, in order to increase the stability, the central part of the card is cut out and a large heavy ring is suspended on the underside. The quadrantal corrector consists of two superposed rings of soft-iron bars *c*, c^1 mounted on two discs c^2, c^3, which are placed round the lower and smaller part of the compass bowl. To equalize the power of the iron rings the upper bars are made smaller than the lower. The bars are 32 in number in each ring, of different lengths, but arranged symmetrically and radially round the centre, as shown in Fig. 3. The bars E, F, G, H are lengthened inwards beyond the ellipse, to an extent, determined experimentally, sufficient to compensate an octantal

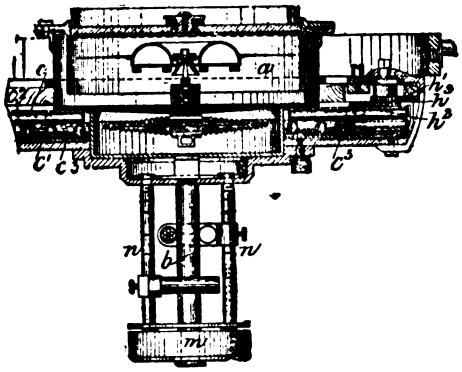

FIG. 3.

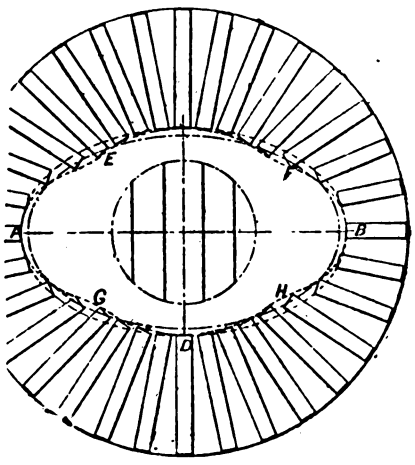

error arising from the true elliptical arrangement. To alter the amount of quadrantal force the correctors can be rotated in opposite directions by a pinion h^1, which gears with two curved racks h^2, h^3 attached to the discs c^2, c^3. The force developed is shown by a scale. To correct the quadrantal deviation E, as well as that D, the correctors can be clamped together and turned as one. The quadrantal corrector can be applied, with equal bars for both rings, in the compass card plane, and then a sliding magnet is placed in a vertical tube *b* to paralyse the disturbing effects caused by motion of the gimbal ring. The whole compass bowl, or the upper part *a* only, can be turned slightly on releasing screws, not shown, in order to displace the lubber line and thereby correct the permanent deviation A. Two vertical guides *n* hanging from the bowl carry an adjustable weight *m* for regulating the stability. The usual semicircular and heeling-error correcting-magnets and Flinders bar are provided.

Digitized by Google

10,203. Lynam, P. J. July 13.

Range-finders of the sextant type are constructed so that the reading may be taken at the sighting eye-piece. A graduated reed D, turning with the reflector, is placed at an aperture in the telescope tube A, and is read by an index-finger E. The reading is reflected to the eye-piece C by a mirror F, attached to a stem H, when pushed into the position L by pressing a knob K. When sighting, the mirror is kept out of the field by a spring G. A magnifying or minifying lens M enlarges or diminishes the image of the readings. A modification for instruments without a telescope is described.

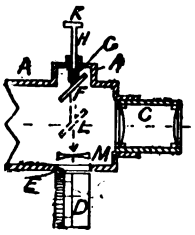

10,263. Heidler, J. July 14.

Angle-measuring instruments; telemeters.—Relates to a form of calliper gauge which can be adapted for measuring vertical or horizontal angles, for the purpose of measuring distances &c. The instrument when used as external callipers, Fig. 5, consists of two bars *e*, *e* connected by links *a*, *a* which are pivoted at the ends *d*, *d* to the bars *e*, *e* and at the ends *f*, *f* to pieces *g* sliding on the bars. The links *a*, *a* are equal, and are pivoted at their middle points *b*, whence it follows that the bars remain parallel to one another in all positions of the links. One of the bars *e* has a scale *h* marked on it to show the distance between the bars, or the scale may be marked on a separate bar, fixed to one of the bars *e* at right-angles. For taking vertical angles a spirit level is fixed on one limb *e* and sights attached to one of the links *a*. For determining the angle subtended by a distant point at a base represented by the distance between *e*, *e* (with a view to finding the distance of the point) telescopic sights are used, one lying along one bar *e*, and the other pivoted at the end *d* of the other bar and working over a graduated arc fixed thereto.

FIG. 5.

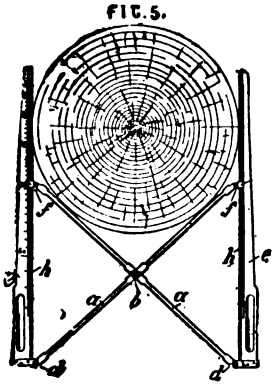

10,287. Holden, H. July 16.

Sounding-apparatus.—The object is to prevent the sample of the bottom taken up by the lead at *b* from being washed away. For this purpose the lead *a* is surrounded by a sleeve *d*, which during descent assumes the position shown in the Figure, *f*, *f* being stops to prevent it from rising further. As the lead is being drawn up, the sleeve slips down until the flange *e* comes in contact with the lead and flange *g* with the sleeve. The sample is thus protected from eddies.

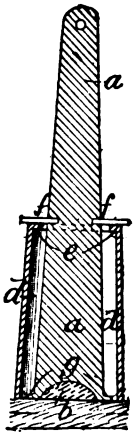

10,299. Wallace, W. W., [*Scott, P.*]. July 16.

Logs.—Relates to improvements on the electric apparatus described in Specification No. 3666, A.D. 1884, and consists in substituting a mechanical timer for the mercurial time glass used in the former invention, and in applying a means for showing for how long and at what time the rotator became fouled, if such accident should happen. Circuit is completed for the electric indicator by the spring *a* coming into contact with a wheel *b* driven by clockwork, *e* being the balance-wheel. The circuit is broken when either of the notches *c*, *c* come opposite the end of the spring, and the semi-rotation of the wheel is timed so that the current flows for, say, exactly half-a-minute. The clockwork is driven by a spring barrel on the arbor *d*, which is first sufficiently wound up by a single stroke of the pawl lever *f*. To ensure the starting being exactly correct, a spring brake *i*, carried by an arm *k* loose on the arbor of *b*, normally holds the balance-wheel *e*. The arm *k* is connected to

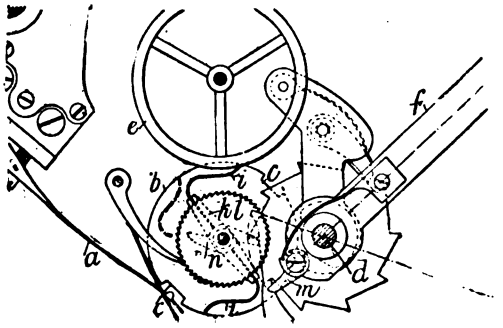

Digitized by Google

the arbor of *b* by a long coiled spring, and it is fixed to a ratchet-wheel *l* carrying projections *n*. When the pawl lever *f* is worked the pawl *m* strikes one of the teeth *n* and rotates the arm *k* and ratchet *l*, so that the brake *i* gives the starting impulse to the balance-wheel *e* and then remains in the position shown in dotted lines, until the wheel *b* comes round so as to relieve the torsion of the spring connection. A second spring brake *i* arrests the balance-wheel *e* when it reaches it. To show the time of the fouling of the log two clocks are employed, or one clock with two sets of hands and independent driving-mechanism is used. The balance-wheel of one clock is controlled by a spring brake having an arm resting on a locking-wheel with two notches therein, into which the arm can fall if the electric current ceases or becomes continuous. When, however, the current is rapidly intermittent the vibrating armature of an electromagnet continually throws up the arm and spring brake so that the movement of the clock is not interfered with.

10,368. Laws, R. W. July 17.

Stands. — The article to be supported is carried by a telescopic tube *b*, at the lower end of which is a bracket b^2 sliding in the outer tube *a*, whereon is fixed a rack. A pawl *c* is pivoted at c^2 to the bracket b^2, and is attached at c^3 to a rod *d*. The lower end of this rod is split at d^1, forming a spring normally to press the pawl *c* into contact with the rack. By raising the rod *d* the pawl is drawn clear of the rack, when the article supported may be raised or lowered.

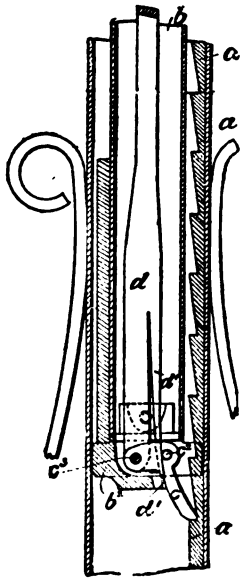

10,414. Hicks, J. J. July 18.

Thermometers.—Relates to the construction of metallic scales for brewers', bath, and like thermometers, which have to be subjected to boiling water, spirit, &c. The numbers and graduations are sunk very deep and filled in with vitreous enamel paste, such as black or coloured ground glass; the scale is then subjected to high temperature in a muffle, when the enamel melts and attaches itself.

10,447. Parkes, W., and **Wakeman, C.** July 19.

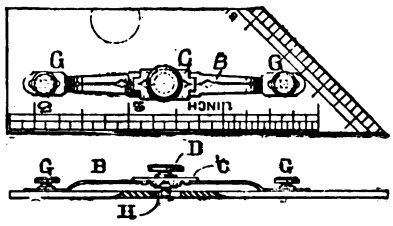

Section-lining apparatus.—The apparatus is specially applicable to set-squares, but may be fitted to corresponding instruments with a curved edge, or to the T-square itself. A loose slide B working by short slots on the studs G, G carries a second slide C by which its play is adjusted as required, a vernier being employed for greater accuracy. On the slide C and passing through a slot in B and a hole H in the set-square is a screw stud D which can be pressed down so as to take a grip of the paper. After drawing a line the slide B is moved, say to the left, to the limit of its travel, the stud D is then pressed on the paper and the square moved in the same direction to the end of its travel; the second line may then be drawn and the same process repeated.

10,500. Bolton, T. July 20.

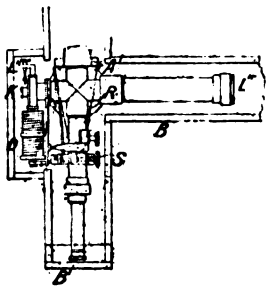

Telemeters.—The Figure shows a plan of half the apparatus. The cylindrical box B is fitted near each end with two cross-tubes. The tubes contain a combination of two telescopes at right-angles, mounted on trunnions A^1, the cross telescope on a carrier R having azimuthal motion effected by a screw S. The telescope L^{II}, L^{III} has a sliding eye-piece K with cross-lines, which is moved by a micrometer screw turning with a graduated screw drum D. The telescope at the other end of the box B has its principal focus defined by cross-wires, or ruled lines, and an illuminated background of ground glass. When the cross telescopes are directed on the distant object, the eye-piece E is shifted till the intersection of its cross-lines coincide with the image of the focal point of the other cross telescope. The reading on the drum D then gives the distance.

Digitized by Google

10,860. Morton, T., and **Baker, F. R.** July 27.

Stands.—Relates to telescopic standards for lamps and other articles. The lower end of the extension tube *b* forms a piston *c* having slots to receive two wedges *f*. Within the tube *b* is a rod *k* screw-threaded at its upper end to engage with a nut *m*, which by means of a collar *n* may be turned through a small angle, thereby causing the rod *k* to rise or fall. The lower end of the rod *k* is shaped to engage with the wedges *f*. When this rod is raised it forces the serrated edges of the wedges into contact with the outer tube *a*, and the extension tube *b* is held firm; on lowering the rod *k* the wedges are released, and the tube *b* may be raised or lowered. In a modification, the wedges are operated by a collar and nut screwing upon the lower end of the rod *k*; and the nut *m* forms part of the tube *b*, the collar *n* being secured to the rod *k*.

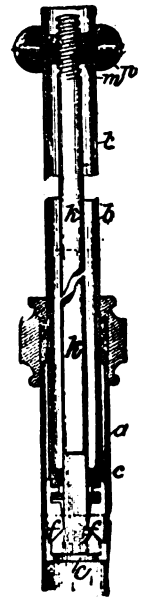

10,950. Willmore, C. H. July 28.

Ellipsographs. — The apparatus is suspended above the cardboard &c. to be marked or cut from a bracket to which the upper part 4, 5 with the attached block 7, having slots 8, 9 at right-angles, is rigidly fixed. The lower part 10 can be swung round under the block 7 by handles 21, 21, and is provided with screws 13, 14 lying in longitudinal slots 11, 12. The screws are capable of rotation only, and can be turned by the heads 20. Pivots 26, 30, carrying oval blocks 27, 31 adapted to slide in the slots 8, 9, are mounted respectively on the part 10 and the nut 22, which latter is adjusted by the screw 14. The pivots have nuts and washers at their upper ends, the washers riding on the edges of the slots 8, 9. The cutter or marker 24 is mounted on a nut 23 travelling on the screw 13.

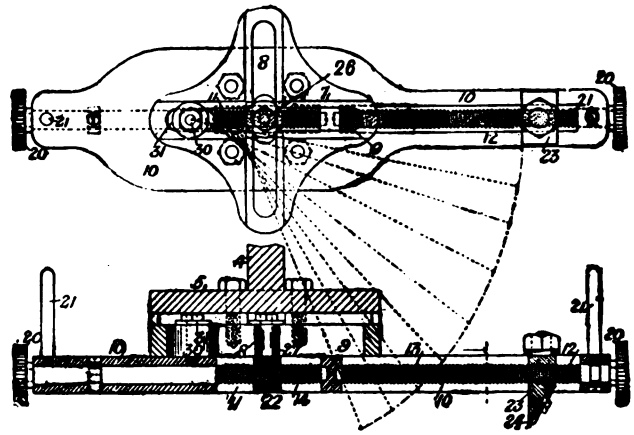

10,951. Molnar, P. July 28. *Drawings to Specification.*

Logs.—The pressure of the water in an open-mouthed vessel compresses air, to an amount shown by a pressure gauge, to indicate the speed of the vessel.

10,956. Smith, C., [*Bläensdorf, R.*]. July 28.

Spectacles combined with incandescent electric lamps. Relates to a combined electric lamp and spectacles for surgical and medical operations and observations. Between the metallic eye rings F and L, which are connected by an insulating horn bow *g*, is supported a capsule C, D containing an

Digitized by Google

incandescent lamp B supplied from a battery through the conductors *c*, *d*, rings F, L, metallic strips *i*, *k*, and leading-in wires *h*, *h*¹. The front of the capsule may be provided with a lens S, and

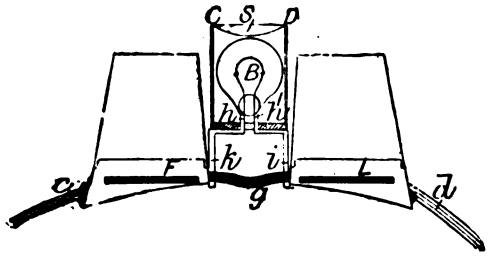

the back is formed of insulating-material. The eye rings may be fitted with suitable spectacle glasses and shield tubes of blackened cardboard or other suitable material. When strong currents are employed the spectacles are made of ivory with the conducting-wires inlaid.

11,133. Caws, F. Aug. 1.

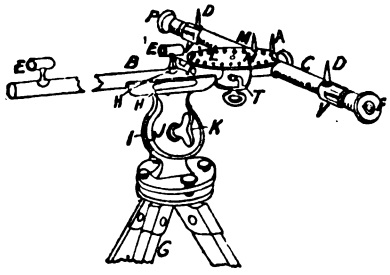

Telemeters; range-finders; clinometers.—Relates to an instrument which can be used to determine the distance of fixed or moving bodies for range-finding &c., the speed of moving bodies, the elevation of objects, &c. It consists of a tube B, on which are two eyelets or telescopes E, E¹ provided with cross-hairs, and a graduated crosshead C at right-angles having a central sighting-pin A and two adjustable sighting-pins D, D set at equal distances from A by screws F, accuracy being ensured by means of the verniers V. The apparatus is mounted on a tripod stand G, and can be levelled by means of spirit levels H, H, while angles of elevation can be taken by means of the altitude circle I and vernier J, the tube B being set at any required inclination and fixed by the screw K. To find the distance of an object moving at right-angles to the line E, E¹, the times when the object is in line with (1) E¹, D, (2) E, D, and (3) E, E¹, A are accurately noted by a chronometer, and by these the speed and distance can be calculated, but to save trouble tables are prepared from which the ranges and speeds can be read off. To determine the distance of a fixed object, the table L, provided with a series of holes in which sight-pins M can be placed, is employed. This table is revolved at uniform speed by clockwork T; and having adjusted it at a certain distance in front of E¹, the time is observed of the transit of one of the pins M across the distant object. This observation is repeated to obtain an average reading and eliminate error as far as possible. The table M is then moved to an equal distance in front of E, and a similar operation performed. The range can be determined from the difference and sum of the times of transit observed from the two points. The details of the apparatus and its method of use may be varied.

11,257. Deans, J. W., and **Foster, A. M.** Aug. 3.

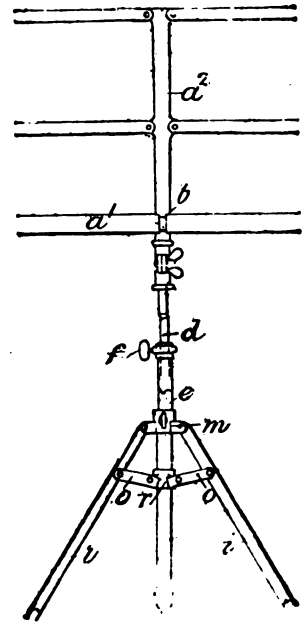

Tripod stands for music stands, reading-desks, and the like. The rod *d* is adjusted within the hollow rod *e* by the screw *f*. Upon the rod *e* slide two collars *m*, *r*, of which the collar *m* may be adjusted by a screw &c. The legs *i* are jointed to lugs on the collar *m* and are connected by three pairs of links *o* to the collar *r*. The links are square at their inner ends, so that they can only turn to a certain extent with regard to the collar *r*.

11,360. Pearsall, W. B., and **Watts, A. J.** Aug. 7.

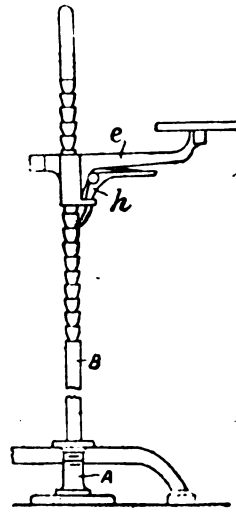

Stands.—Relates to an adjustable stand for use as a dentist's bracket stand, as a reading-desk support, easel, &c. A tripod base A supports a ratchet toothed stem B, on which is adjusted a bracket *e*, capable of rotation, by a spring catch *h*.

Digitized by Google

11,380. Mackenzie, C. Aug. 7.

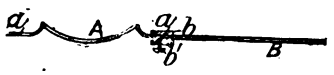

Spectacles.—Consists in making the bridge removable so that it can be renewed in case of breakage, or so that the spectacles may be made to fit, or be taken to pieces for packing. The Figure shows one method of attachment; the bridge A extends at *a* into a socket *b* on the bows B, and is secured by a screw b^1. The method of attachment may be modified in many ways.

11,429. Parkinson, J., Fawcett, S., and **Parkinson, C. F.** Aug. 8.

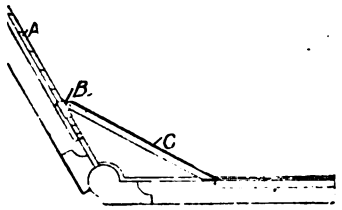

Squares; angle-measuring instruments; clinometers; levels.—Relates to means for enabling rules, T-squares, levels, and set-squares to be accurately set for indicating angles. The Figure shows the invention as applied to a rule. The two arms are connected by a bar C pivoted to one arm, and to a carriage B working over a slide A on the other arm, so that the two arms may be set at any required angle. A similar arrangement is applicable as a set-square, and may be made applicable as a clinometer or level by mounting a spirit tube on one of the arms. When applied to a T-square, the head is pivoted and connection made in the same way between the head and blade.

11,539. Priestley, G. F. Aug. 10.

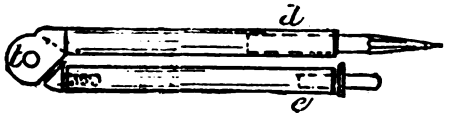

Compasses, drawing.—The guide-rods which hold the paper against the paper roller of a specially-constructed type-writer are adapted to serve, when removed, as compasses.

11,578. Decoudun, J. Aug. 10.

Actinometers for measuring the intensity of light in a photographic camera. Relates to improvements on the invention described in Specification No. 13,332, A.D. 1887, and consists of applying a lens A, Fig. 1, so that the eye may be applied close to the instrument instead of being placed at a distance of about 10 inches. C is the milled head

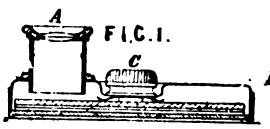

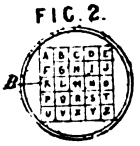

for bringing the gradually-darkening luminous points before the eye-piece. A further modification consists in substituting a fixed plate B, Fig. 2, with reference letters or numbers cut through it for the rotary disc. The varying-translucent material is placed at the back and the whole mounted in a tube with eye-piece and lens. This tube is held before the focussing-screen and the time of exposure estimated by the least visible letter, some of the letters being entirely obscured. The lens and eye-piece are adjustable for focussing, and removable for use as an ordinary focussing eye-piece.

11,725. Faucette, J. B., and **Fletcher, H. L.** Aug. 14.

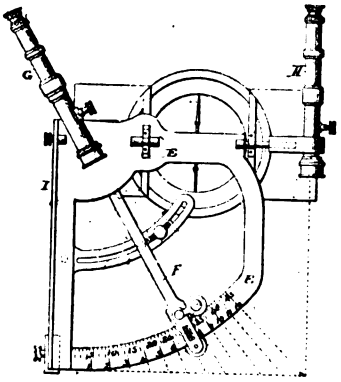

Telemeters.—A quadrant E with altazimuth motions carries a fixed tangent telescope H and a pivoted radial telescope G. The arc E is graduated from the tangent at right-angles to the tangent telescope H. The telescope G has a reading-arm F with tangent and clamping screw. The two telescopes are directed upon the same object, and the quadrant reading is taken. The length between the telescope forms the base, and the distance required is given by the quotient of the base squared by the reading. With elevated objects the inclination of the quadrant is also read on a vertical semicircle I. The tangent telescope of one instrument and the radial one of another may be used with the distance between them as base.

Digitized by Google

11,809. Maurice, A. H., Carr, L., and Owen, D. Aug. 16.

Gravity, measuring force of; altitudes, linear, measuring; weather indicators. — Relates to an apparatus for measuring electric potential, more particularly that of the earth and atmosphere, applicable also for measuring the attractive force of gravity, the height of mountains, &c., and as a barometer. The action of the device depends upon the fact that when a dielectric is polarized by the inductive action of an electrified body it increases in volume, or, if enclosed, causes an increase of pressure proportional to the rise of potential of the electrified body. The Figure shows one form of the apparatus. A cylindrical glass vessel A, closed at the top by a disc *a* and filled with dry air, contains a metal cylinder B provided with a pointed discharging-wire G; a pressure gauge is formed by a U tube one limb of which is of large sectional area and is placed inside the metal cylinder, while the narrow limb *c* is placed outside the cylinder, is open at the upper end, and is partly filled with glycerine. Any electrified body acting in such a way as to vary the potential of the outside of the containing-vessel will result in an alteration in the degree of polarization of the enclosed air and an increase or diminution of pressure, which will be indicated by the gauge. In modifications, two vessels may be partly filled with a liquid dielectric and partly with air, the open ends of a U tube dipping into the liquid; the two vessels may be suspended from a beam the movements of which are automatically recorded on a chart &c. As the earth's potential at any given place varies directly with the attraction of gravity, the electrometer affords a means of measuring the latter. As the potential diminishes with the diminution of the force of gravity, a measurement of the potential will afford an indication of the height. A rise of the earth's potential is followed by meteorological changes and usually by a fall of the barometer.

FIG. 1.

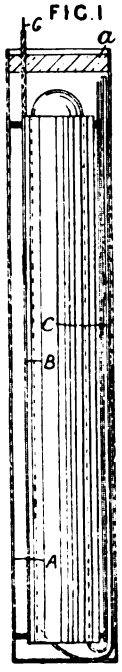

11,856. Farquharson, W. Aug. 16.

Range-finders. — An object can be observed directly through the sights D, E, Fig. 2, along the line X, or by reflection at the mirrors C, G, the former of which has a fine adjustment screw F for setting it accurately at 45° with the line X. The mirror G is pivoted on a central axis, and can be revolved by the arm H, from the position shown in the Figure to that indicated by the dotted line. The range of observation by reflection is thus any angle up to 90°. On the top of the casing is a scale and index, the latter mounted on a central axis geared through the pinion I, wheel K, pinion L, and sector H^2, carried by the arm H to the mirror G, this multiple gearing necessitating a large movement of the index for a slight rotation of the mirror. Fig. 4 shows the method of using the instrument. The distant point Q is observed directly from the point R, and a point S, on the line R, S, at right-angles to S, Q, by reflection. The distance R, S is known, say 25 yards, and the instrument is next moved to S, and R sighted directly. The index is then rotated over the scale until the distant object Q becomes visible by reflection, when the range may be read off on the scale. The scale is graduated empirically in multiples of the base. In a modification, an ordinary optical square may be employed in place of the mirrors, and the index geared with the sights, which are arranged to revolve.

FIG. 2.

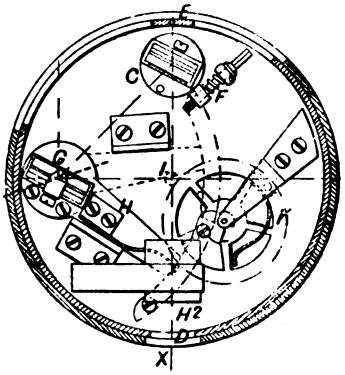

FIG. 4.

11,869. Twigg, G. H. Aug. 17.

Compasses, drawing; scales.—Relates to combined compasses, pen and pencil holders, and scales. A tube *a* is arranged to receive a pen-carrier *e* at one end and a lead carrier *b* at the other; the latter may also be provided with an eraser *c*. A sleeve *h* slides on the tube *a*, and carries the compass leg *i*, which is connected to the slide by bulging outwardly the metal into eyelets which are passed through holes in the forked end i^3 of the leg and riveted or

FIG. 7.

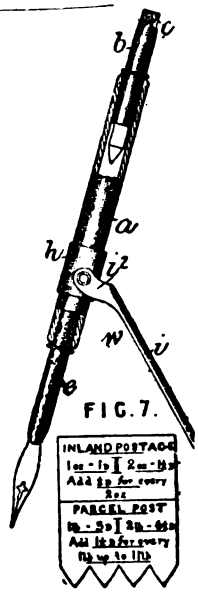

Digitized by Google

closed over. The leg is impressed with an inch and millimetre scale. A sheath, the blank of which is shown in Fig. 7, is provided to enclose the ends of the leg and pen or pencil.

12,153. Powell, F. W. Aug. 23. *Drawings to Specification. Amended.*

Compasses, magnetic.—Comprises the combination of a cigar cutter of special construction with a compass.

12,186. Somerville, J. Aug. 23.

Rulers.—A ruling-shell B with a handle B^{11} has pivoted within it a roller, or rollers, A. The pivots *b* enter a recess in the roller, and may be fixed or screwed into the ends of the shell, or they may be arranged as shown in Fig. 5; in this case a spring b^{11} keeps the pivot in place except when it is desired to remove the roller; the pivots can then be drawn back by the head b^2. In another form, the pivots are formed on the roller and held in slotted bearings in the shell by cross-pins. The roller A is covered with a layer of india-rubber *a* or the like, or by a roll of blotting-paper; it may be of wood or tubular metal, and in the latter case may be slit longitudinally and expanded by conical blocks so as to tighten the surrounding sheath.

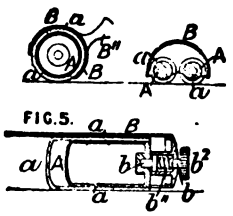

12,222. Son, C. R. van. Aug. 24.

Range-finders.—A scale *a*, which can be turned out of the way by the button *b* when not required, is fitted behind or before (preferably the former) the object-glass of a telescope or opera or field glass. The scale is marked so that the distance of objects of known size can be determined when the glass is held at a known distance from the eye, by observing their apparent size on the scale. The strap by which the glass is carried is made of such a length that by holding the glass as far as possible from the eye the right distance for observation is attained.

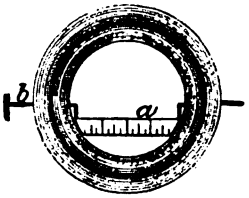

12,242. Granville, W. P. Aug. 24.

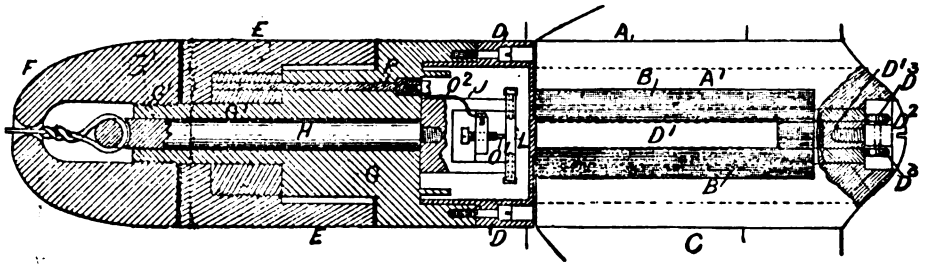

Logs.—Consists in the employment of an uninsulated metallic tow-line with an electric log, which should be of the type in which a revolving head rotates a magnet and produces alternating currents in a coil of wire for actuating the recorder. When existing logs are employed they must be modified (1) to reduce the resistance in the indicator and coil, and (2) to prevent or render harmless a permanent current between the wire and the sides of the ship by connecting them to plates of the same metal as the wire and ship's side respectively, the plates being in a box filled with sea water, situated between the ship's side and the recorder; or by connecting the wire to the ship's side and introducing a condenser of large capacity; or by connecting the terminals of the primary circuit of an induction coil to the ship's side and the wire, the recorder being in the secondary circuit. All the parts of the log exposed to the sea water must be of the same metal as the tow-line, or of some material that will not cause a current. The Figure shows a specially-constructed log. The battery is formed by a zinc cylinder E, the sea water, and the side of the ship. E is connected by a brass rod P and wire O^2 with a contact-point O^1, and the circuit is made and broken by the vibrations of an armature L, through the bracket J, the rod H, and the tow-line, the two latter being preferably of silicium bronze. The armature L is contained in a water-tight box fixed into a vulcanite body G with an attached tube G^1, also of vulcanite; the cover D has a brass rod D^1 attached, which forms a bearing for the rotating part A furnished with screw blades C. The part A is a vulcanite cylinder surrounding a tube A^1 of metal, and carries a horse-shoe magnet B, B by which the vibrations of the armature L are caused; it is secured by a pin D^2 with friction rollers D^3, D^3. The fore-part of the log is covered by a vulcanite cap F.

Digitized by Google

12,296. Lilley, G. C. Aug. 25.

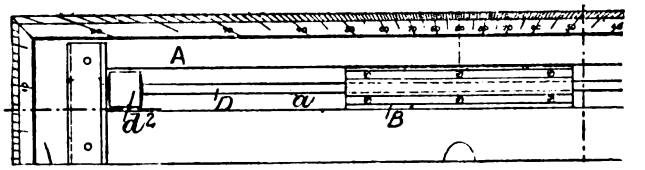

Protractors.—The protractor is specially applicable to laying off the course of a ship upon a chart, and is constructed so that it can be moved in the direction of its length without lateral displacement and *vice versâ*. The protractor A has a long slot *a*, in which works a slide B, flush with the lower side of the body; this, when pressed firmly against the chart or other surface, allows of the protractor being moved in the direction of its length. When a lateral movement is also required, a spindle D is provided, fitted with rollers d^2, (one only shown), as in a common form of parallel ruler.

12,798. Vigil, P., and Revueltas, J. M. Sept. 4.

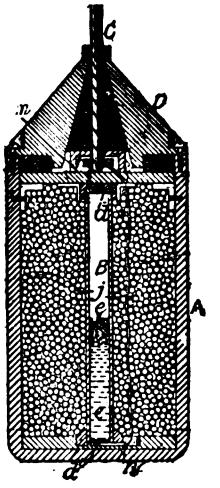

Sounding-apparatus.—A vessel A with a conical cap D is fitted with a tube B of insulating-material and rendered heavy by shot *j*. Caps of conducting-material *d*, d^1 are fitted at either end of the tube, which is about half filled with mercury *e*, and the caps *d*, d^1 connected to conducting-wires *m*, *n* of the cable C. The various parts are properly supported and packed. This instrument is trailed below the ship, and on striking the bottom tilts on to its side, when the mercury electrically connecting the caps *d*, d^1 completes circuit for a battery on board ship, and a bell or like device is sounded.

13,005. Grindley, W. H., and Hensley, W. S. Sept. 8.

Pyrometers.—The apparatus is on the principle of the Wheatstone bridge, and is adapted for determining the high temperature of ovens and the like. For this purpose coils of platinum or like metal are wound between the threads of a screw formed of earthenware or similar insulating-material, and then covered with a coating of clay, which is afterwards baked; the coating, resting on the threads of the screw, leaves room for expansion, but prevents the coils from touching one another and so short-circuiting. Fig. 1 shows part of the apparatus for determining the temperature in fire-ovens 1, 2, . . . A number (say 8) of the above-mentioned coils 1^a, 2^a . . . 8^a are placed at different points of the oven, and each coil is connected by wires B, *d* with the switch-board D and Wheatstone bridge C. The wires *d* lead to mercury cups d^1 . . . d^8, any one of which can be connected when desired with a mercury cup D^1 (or the corresponding cup of another group) by a U-shaped wire. D^1 is connected to the binding-screw c^{30}, and then to the positive

FIG. I.

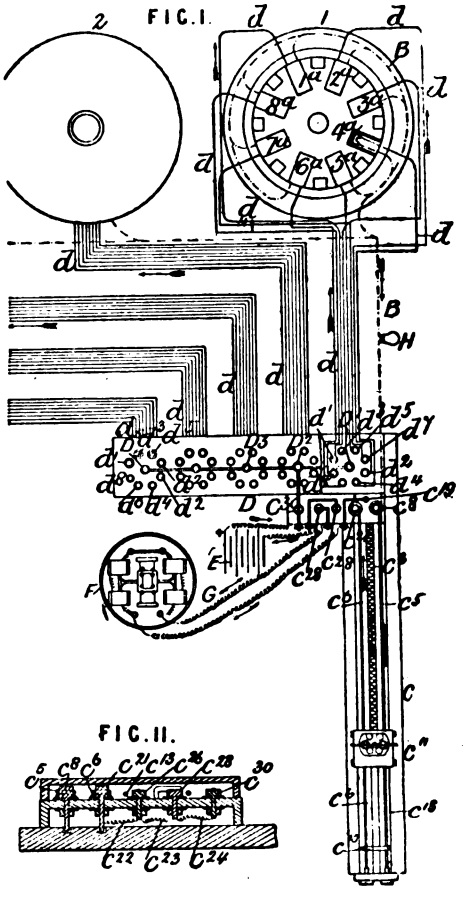

FIG. II.

pole of the battery E. The negative pole of the battery leads to the binding-screw c^{26}, Fig. 11, and thence through a resistance coil c^{22} to the screw C^{21}. The bridge-wires c^6, c^5 are connected at their ends by a pice c^{10} of practically no resistance, and their other

Digitized by Google

ends are attached to the screws c^{21}, c^{5} respectively, c^{5} being the screw to which the wire B is connected. A delicate galvanometer F (preferably of a reflecting-type) is connected by wires G with the terminals c^{26}, c^{19}; the former leads by two equal resistance coils c^{23}, c^{24} (forming the fixed arms of the bridge) to the terminals c^{26}, c^{30} respectively, and the latter c^{19} is connected by a flexible conductor c^{3} to a sliding carriage c^{11}. This carriage is provided at both sides with spring contact-pieces, either of which can be pressed down upon the wires c^{5}, c^{6} respectively; the wires c^{5}, c^{6} are of different thickness, and so of different resistance, to give a greater range of temperatures. The fixed arms of the bridge being the equal coils c^{23}, c^{24}, the adjustable arms are (1) from c^{30} through D^{2}, D^{1}, d^{1} to the oven coil 1^{a} along B and c^{5} (or c^{5} and c^{6}) to the point of contact of c^{5} or c^{6} with the carriage, and (2) from this point of contact to c^{21} through the resistance coil c^{22} to c^{26}. The cross-circuit for the galvanometer passes from c^{26} through the galvanometer to c^{19}, and by the flexible wire c^{3} to the carriage c^{11}. When a balance has been obtained the temperature is read off from a scale marked by the side of the wires c^{5}, c^{6}. The resistance of the wires c^{5}, c^{6} should be half the difference of the resistance of the oven coil at the maximum and minimum temperatures to be measured, and the resistance of the coil c^{22} equal to the resistance of the arm of the bridge (when balanced) containing the oven coil at minimum temperature. To compensate for variations of resistance in the connecting-wires due to alterations of external temperature, carbon, for example an incandescent lamp H, is introduced into the circuit.

13,021. Haskett-Smith, E. L. W. Sept. 8.

Range-finders.—A tube A, Figs. 1^{A} and 2^{A}, telescopic if required, is provided at the top with a reflecting-prism *x*, by which the rays from the distant object are turned down the tube, through a lens therein and a second reflecting-prism with convex and concave surfaces, to an eye-piece B. This system forms a telescope equivalent to a fixed telescope at the end of the tube A, and at right-angles thereto. A second telescope C, movable on pivots at *c*, is provided for taking the angle of inclination of lines drawn to the distant object from the extremities of the base. The two telescopes are placed side by side, so that they can be used simultaneously like a binocular, and when the two images coincide the range may be at once read off on the adjustment devices. The tube A is provided with a

FIG. 1A FIG. 2A

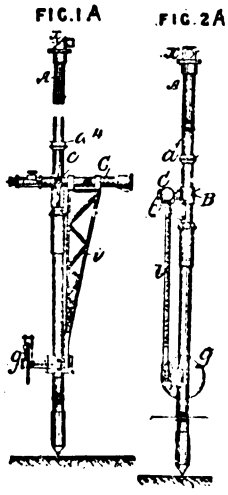

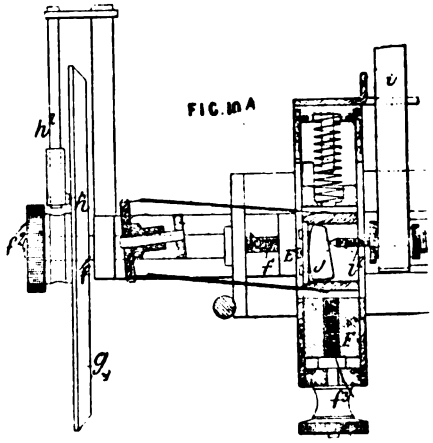

collar a^{4}, having holes for bayonet points, so that it may be supported by rifles. The tubular masts of ships may, in some cases, be employed as base. Fig. 10^{A} shows adjusting-mechanism. The rod or girder *i*, by which the telescope C is adjusted, is under the control of a coarse and fine adjustment, consisting of two slides E and F placed at right-angles. The screw *f*, turned by the head f^{2}, traverses the part F bodily to the right, and the projection i^{3}, pressing against the piece J, moves the girder and roughly adjusts the telescope; the movement of the screw *f* is indicated by a pointer *h*, on a guide h^{2}, working in a graduated spiral groove in the face of a disc *g*. Other equivalent means may be substituted. The fine adjustment is effected by turning the screw f^{3}, and so traversing the slide F, the piece J moving the projection i^{3} slowly to the right by its inclined surface. As the inclination of the surface J should vary, according to the distance indicated by the rough adjustment, it is mounted in a pivoted frame and adjusted automatically during the movement of the slide, by a cam arrangement not shown. In some cases the fine adjustment may be dispensed with.

13,176. Coulson, J. Sept. 12.

Logs.—The rotator B, Fig. 2, with vanes *f* is mounted in bearings *d*, *e* (the latter adjustable) in a frame A provided with fins *b*, *b* and an inclined neck *a*, through which electric conductors pass into the cable. The wires are fixed to studs n^{1}, o^{1} on the top of a water-tight box E, Fig. 3, having a flexible diaphragm connected with a lever *r* and a circuit-closing device *n*. The rotator drives the worm *l*, and so the wheel D, on the spindle of which is a one-toothed wheel for driving the star-wheel *l* intermittently. The stud *m* is brought at each revolution against the lever *r*, and completes circuit for an electric indicator. In a modified

Digitized by Google

form, the rotator may be mounted in a tube close to the vessel's side and open at either end to the water, stop-cocks being provided at the ends. The

FIG. 2.

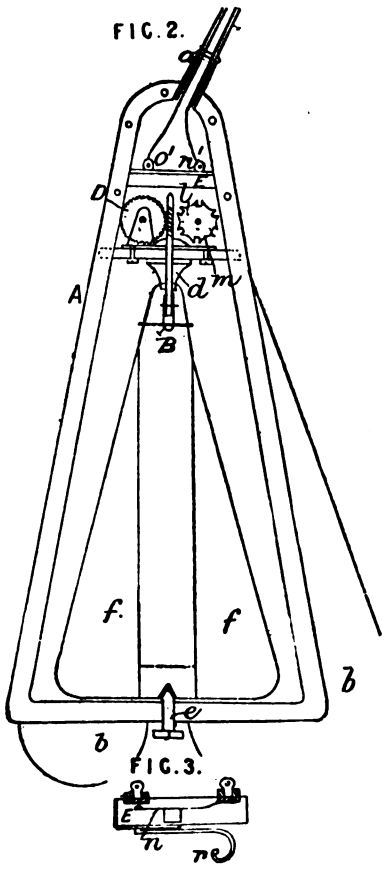

FIG. 3.

central part of the tube which carries the rotator is fixed in place by screw couplings. Either a mechanical or electrical indicator, or both, may be used in this case.

13,258. Swift, J. Sept. 13.

Microscopes.—Relates to petrological and other microscopes, and consists in means for revolving together the polarizing and analysing prisms. The tube D^1, carrying the analysing-prism, which is capable of independent rotation, is pivoted to the tube D on which is the toothed wheel E gearing with a wheel E^1 on a spindle E^2 of pinion wire. Below the stage is the polarizing-prism F, to which is attached a toothed wheel F^1 gearing with a wheel F^2 on a sleeve F^3. The sleeve F^3 is recessed so as to fit the pinion wire and be capable of sliding thereon. In this way the prisms must rotate together, while the longitudinal movement for focal adjustment is not interfered with. The following devices are also mentioned in the Specification. (1) A goniometer scale G and cross lines in the eye-piece for measuring the angles of crystals. (2) A slide J with lens and diaphragm of small aperture for showing optical pictures in minute

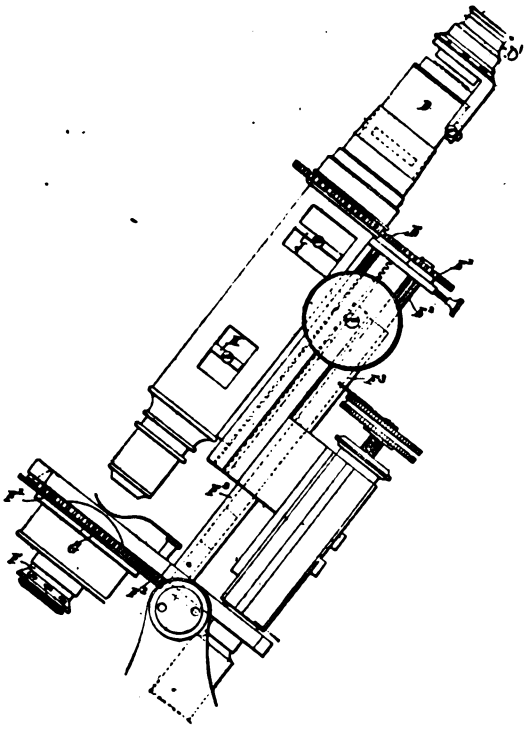

crystals. (3) A slide K with double convex lens for showing the optic rings round the axis of crystals. (4) A lens fitted to slide near the achromatic condenser for increasing the angle of the condenser.

13,310. Wood, J. Sept. 14.

Ruling-pens.—The pen is designed for ruling parallel lines, such as those required for cash columns &c. A multiple holder A is provided to receive a series of nibs, which are of different shapes, according to the distance required between the lines. The nibs have small pins *h* sliding in slits in the holder, so that they may be interchanged or pushed upwards out of use. A broad nib may be used when a single dark line among finer ones is desired. The holder A may be formed with a barrel to fit over the stick of a penholder, or it may be arranged to fit the shank C of a penholder like an ordinary slip pen,

Digitized by Google

13,398. Weldon, F. Sept. 17.

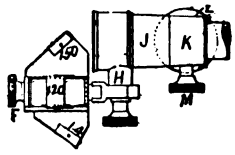

Telemeters.—Relates to improvements on the invention described in Specification No. 2589, A.D. 1883, where two prisms are employed, one right-angled and the other of an angle 88° 51′ 15″. The distant object is observed by direct vision and brought to coincidence with the reflected image of a second object in the lesser angle prism; the observer then moves in the direction of the second object until its reflected image in the 90° prism coincides with the first object directly viewed, when the base travelled is one-fiftieth of the range. The Figure shows a plan of the improved instrument. Four prisms, cut to special angles for different ratios of base and range, are mounted on an axis F, so that they can be rotated as desired in front of the telescope J. The telescope is connected with a long handle L, by a ring K, so that it can be rotated to sight objects either above or below the horizontal plane of the observer. For portability, the handle is removable by loosening the screw M, and the prisms can be turned down close to the handle on an axis H. Binoculars may be fitted with the device if desired. The apparatus, though primarily intended as a range-finder, is applicable for general surveying purposes.

13,664. Händel, R. Sept. 21.

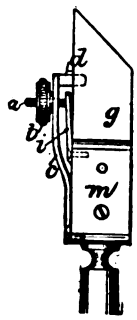

Ruling-pens.—Relates to pens for ruling the five lines of a musical stave, and generally to pens for ruling parallel lines at distances apart, which may be altered within slight limits. A number of ruling-pens *g* are attached side by side to a block *m* which is mounted on a handle. A comb or set of wedges *d* is fixed to a spring *c*, the teeth lying between the pens. The wedges are pushed in between the pens by a thumb-nut *b*, screwing on a pin *a*, attached to a small plate *i*, and are withdrawn by the spring *c*, the effect being to cause the pens to separate, or to approach. The pens themselves are either hinged to the block *m*, or mounted on springs which tend to force them together. When hinged, they require a second comb moving with the former to reduce the distance between them. The comb may also be carried as a slide moving along the handle.

13,868. Ramsden, J. W. Sept. 26. *Drawings to Specification.*

Tripod stands.—The legs are in two parts which slide on one another, and are split and held apart by a hinged strut.

13,893. Reeves, E. A. Sept. 26.

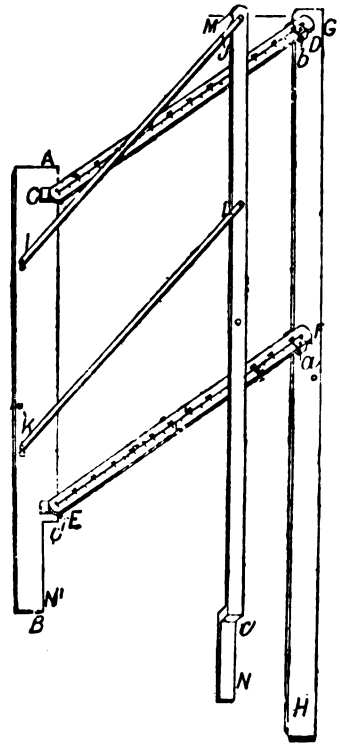

Dividing-instruments; scales.—Relates to an instrument for dividing a straight line into any number of equal parts, and for measuring any portion of such a line. A bar A B is connected by graduated links C D, E F with a second bar G H, the pivots connecting the latter to the links being swivelling pieces *a*, *b* in which the links can slide. A third bar M N is also connected by equal links I J, K L with A B, and is arranged to double close up over it so that the inside edges lie in the same plane, the part *c*, N fitting into the recess c^1, N^1. To divide a line into any number, say 56 equal parts, the bar G H is set with the swivels *a*, *b*, which act also as indices at the graduations 56 on the two scales, and the bars M N, G H are placed at the extremities of the line. The bar M N is then moved in succession to the graduations 1, 2, 3, and the points at which it cuts the given line are marked with a pencil. To measure the length of a given portion of line, the bars A B, G H are set at the extremities, the indices *a*, *b* being placed at 100. The bar M N is then moved to the end of the given portion, and if it then cuts the links at graduations, say, 64, the portion is ·64 of the whole line.

14,171. Potter, E. T. Oct. 2.

Magic-lanterns.—Instead of a series of slides, a continuous band D, on which are painted the scenes, or from which are stamped the letters of

Digitized by Google

an address &c., is drawn by clockwork H or otherwise from a spool K to a spool F between the lens

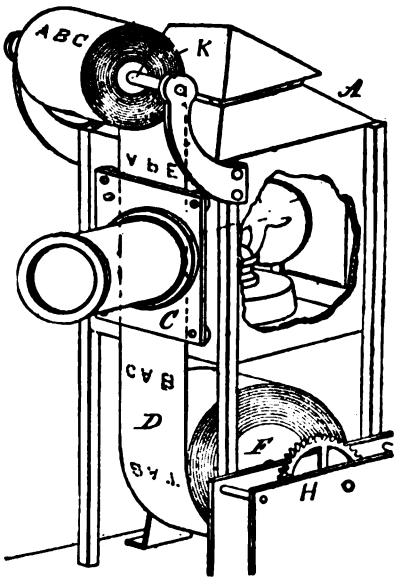

plate C and the body A. An opaque material may be employed for the strip D, where the words or parts of the scenes can be represented by simply stamping out the material of the slide so as to let the light shine direct on the screen; otherwise translucent material, such as prepared paper, collodion, &c., must be used.

14,253. Squire, W., and **Beanland, J. R.** Oct. 4.

Compasses, drawing.—Relates to pencil holders in general, stated to be applicable to compass legs. The pencil is held by means of a spring tongue compressed by a sliding sleeve. The holder is formed by cutting out a blank, Fig. 1, with a tongue A, and bending it round into a tube as shown in Fig. 2. The sliding sleeve B forces the end of the tongue against the pencil, which is inserted in the tube.

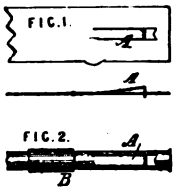

14,683. Free, R., and **Pierce, H. J.** Oct. 12.

Thermometers.—Alarm thermometers are constructed with two tubes *a*, *a*×, rising from a common bulb (though not so shown) and containing two sliding wires *f*, *f*×, which can be set to meet the mercury at any desired limiting temperatures. Electric connections are made with these wires and another fused through the bulb bottom. When the mercury falls below the minimum wire *f*, the circuit of a relay *l* is broken so that the armature *m* drops into contact with a mercury terminal *n*

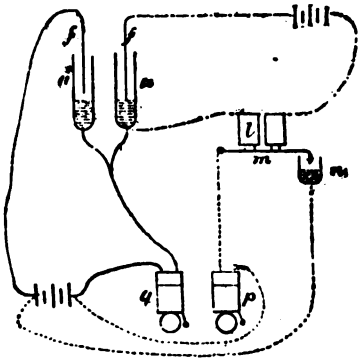

and completes the circuit of an alarm *p*. When the mercury rises to the maximum wire *f*×, the circuit of an alarm *q* is completed.

14,801. Inkpen, G. C. Oct. 15.

Tripod stands.—A base-plate B, for carrying a camera or surveying-instrument and provided with levelling-screws *b* or a ball-and-socket joint, is secured by a centre screw *d* to the handle of a walking-stick H. The ferrule *a* of the stick screws into a folding tripod, the legs of

FIG.1.

FIG.6.

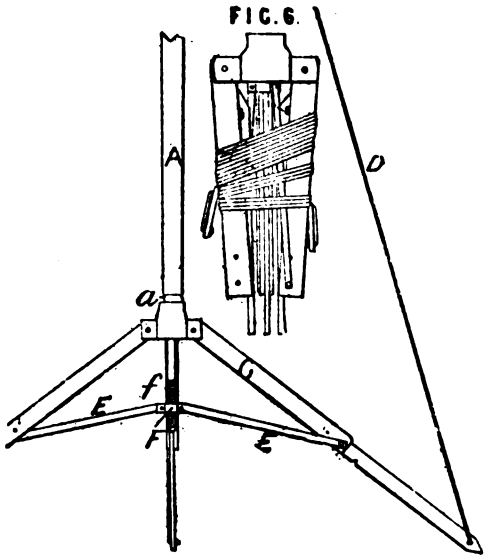

which are distended by rods E attached at their

Digitized by Google

inner ends to a nut F on the screw *f*. The extremities of the tripod legs are attached by guys D to the base-plate B. The apparatus is shown folded in Fig. 6.

14,818. Kilgour, G. Oct. 15.

Telemeters; levels; altitudes, angular, measuring.—A telescope is mounted on the usual theodolite head, in which, however, the adjustments for vertical angles are omitted, the telescope resting in Y-bearings placed towards either end and being always horizontal. Fig. 3 shows a section of the end of the telescope; g^1 is the object glass, and g^3 a prism for reflecting to the eye-piece the rays received through the side windows g^4. Direct vision is also possible through the end of the telescope at the sides of the reflector, but is seldom required. To determine the range of a distant object it is sighted by one reflector and brought accurately to the centre of the field of view. The telescope is then reversed in its bearings and the object sighted by the other reflector, the displacement in the field of view being measured by a micrometer. For measuring the angles of elevation of an object, the telescope is rotated in its bearings to approximately the correct angle, and clamped in the ring *h*, Fig. 5; the reflected image is then brought to the centre of the field of view by the fine adjustment, which consists of the screw h^1 and piston-rod h^2, between which an arm *e* of the stand is clasped. On turning the screw h^1, a slow rotation is given to the clamp *h* and telescope, and the angle is read off on a scale provided with a vernier. In a modification, two telescopes with a common eye-piece are employed; in this case a double image is formed in the eye-piece and no reversing of the telescope is necessary.

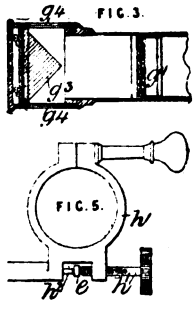

14,820. Darwin, L. Oct. 15. *Drawings to Specification.*

Range-finders.—The distance is inferred by observing the apparent size on a photograph of a known object, such as the mast of a ship.

14,901. Dougherty, B. A. Oct. 17.

Thermometers.—Relates to alarm apparatus for indicating temperature and detecting fire. At a central station are fixed a series of boards, such as L, having brass strips *m*, *n* let into them and connected from the terminals *r*, *o* through an electric bell to a battery. To each board are pivoted at *b*, *e*, *h* a series of switches *x* 1, *y* 2, *z* 3 connected by wires to the bulbs of corresponding thermometers, while wires pass from the terminals *p*, *d*, *q* and are melted into the glass of the thermometer at any degree required. Normally the circuits are all

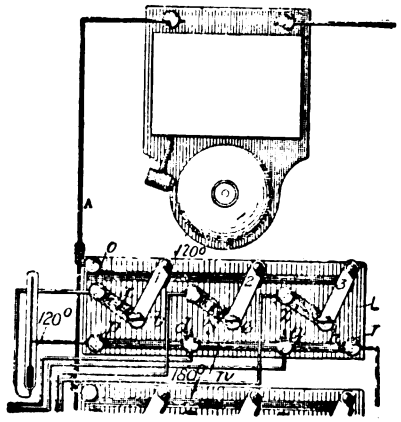

closed at the switches, so that on the temperature rising at any point where a thermometer is placed, and closing the circuit through the mercury, the alarm bell will ring. The switches are then opened in order until the bell ceases, when the locality where the rise of temperature has taken place is determined.

14,943. Feltre, C. M. M. de Goyon, Duc de. Oct. 17.

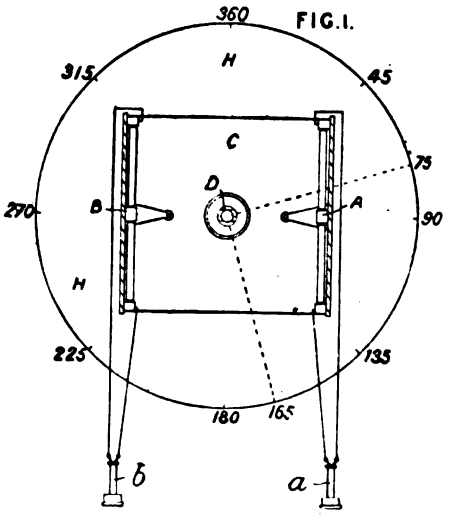

Sounds, locating.—Relates to a topophone or apparatus for determining the direction of origin of sounds and applicable for marine signalling in foggy weather. Two or more microphones A, B are arranged in the circuits of telephones *a*, *b* at the opposite sides of a box C mounted on a vertical shaft D. The shaft D passes into a cabin &c.

Digitized by Google

where it works on a footstep bearing above a table provided with a disc divided into degrees. The shaft is rotated by an index-finger turning above the graduated disc. The operation of the apparatus is as follows:—The telephones *a*, *b* are applied to the ears of the person receiving the signal. The box C is then rotated until the sounds received in each ear are of equal intensity, in which case the direction of the sound passes through the axis D in a plane parallel to the microphones. The direction of the sound is fully determined by turning the box C through a right-angle and noting the side from which the sound is greatest. A wind vane may be mounted on the shaft D, and the direction of the wind may be indicated on the graduated disc so that the effect of the wind may be taken into account.

15,428. Trapp, E. A. Oct. 26. [*Complete Specification but no Letters Patent.*]

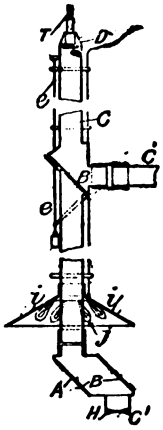

Reflectors.—The apparatus is intended for observing the various rooms of a building from one room, a sunken vessel from a boat, &c. For the former purpose a main tube C is employed having several branch pipes such as C^1, each of such pipes being provided with a reflector B, which can be turned back if desired by the weighted cord *e*, so as not to interfere with the reflected rays from pipes beyond. The end of the tube is fitted with a box having two reflectors B, B and a lens H, preferably double concave, so as to take a large field. If necessary, external mirrors may be employed to direct the rays to the reflectors B, B. The eye-piece D is fitted with a lens or a telescope T. A reflector *i* throws the light of illuminating lamps *j*, generally electric, upon the object to be observed when the latter is in a dark place. This arrangement, without the branch pipes, is applicable to observing sunken vessels.

15,472. Watkin, H. S. S., and **White, A. W.** Oct. 27.

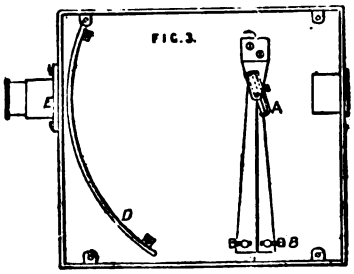

Clinometers.—The elevation of a distant object is ascertained by the clinometer shown in Fig. 3, which is a modification of that described in Specification No. 217, A.D. 1884. The object is seen from the peep-hole E through the opposite aperture, a curved mirror A being carried on the pendulum B to reflect that part of the graduated curved scale D which corresponds to the elevation of the object. The graduations are shown in yards of range, so that the necessary allowance may be readily made when sighting a gun.

15,505. Harrison, J., and **Livsey, J. B.** Oct. 27.

Ruling-pens.—A drawing-pen is constructed with either a feeding-reservoir, or with a brush or other capillary substance between the blades, or both of them may be used. Various forms of reservoir are employed with a suitable ink-supply valve, and air valve where necessary, by which the flow may be rendered continuous or intermittent. The blades may also be dispensed with, and the brush used with a guide for ruling, and without the guide for writing. The reservoir again may be formed or placed in the handle, or may be attached by a clip, and it may be rigid or formed of flexible material, so that when twisted the ink is forced out. The Figure shows one form of the reservoir pen with brush. The brush *b* lies between the blades, and is held in position by a pin or peg *d*; it can be pushed forward or drawn back for thick or thin lines by moving its socketed handle on the rod *c*. *r* is the reservoir having the air port *a*, which can be closed by turning the head *f*, and the supply valve *e*. Where a reservoir is not employed the brush may be pivoted to swing out laterally for dipping in the ink.

15,664. Smith, T. Oct. 31.

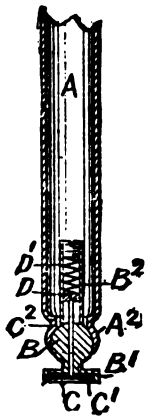

Ruling-pens. — Relates to handles described in reference to glass cutters, but stated to be applicable to ruling-pens. The handle A is provided with a socket A^2 for the ball B carrying the tube B^2 enclosing a spring D^1. A piston D is pressed by the spring on the rod C^2 passing through the ball B and attached to the disc C^1 on which the cutter or diamond C is eccentrically mounted. A box or flange B^1 holds the disc C^1. Or a flat spring may be used to exert pressure on the disc. When the tool is used the pressure of the cutter on the glass never exceeds that of the

Digitized by Google

spring, and owing to its eccentric mounting the diamond always sets itself in proper position with relation to the direction of the cut; the ball-and-socket joint causes the cutter to remain always perpendicular to the glass.

15,728. Hardy, W., and **Hardy, J. J.,** [*trading as* Hardy Bros.]. Nov. 1.

FIG. 2.

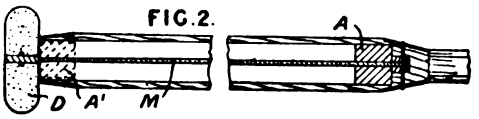

Gravity, adjusting centre of.—Relates to a method of regulating the balance of various articles by placing adjustable weights in the handle. The Figure shows a fishing rod. Inside the hollow butt is placed a screw spindle M which engages with a weight A. Thus, by the rotation of the button D, the weight A is made to take up any position between A and A^1. The cavity is made oval in cross-section to prevent the rotation of the weight. The balance may be regulated by altering the order of a series of wood and metal discs on a plain spindle. The invention is applicable also to tennis or cricket bats and other articles.

15,736. Utting, M. W. Nov. 1.

Magic-lanterns, slides for. Menu or invitation cards, ball programmes, notepaper, trade circulars, almanacs, and similar articles of stationery are formed with an aperture or open space, over which a transparency or the like, bearing any suitable design or matter, is placed. The transparency may be a landscape or other view, or may consist of a plain background bearing advertisements &c. It may be secured by any suitable means, as by gumming the edges, securing in slits, &c. The cards &c. may be used as slides for magic-lanterns. In the Provisional Specification it is stated that a photograph may be employed instead of the transparency.

16,046. Beauchamp, F. Nov. 6.

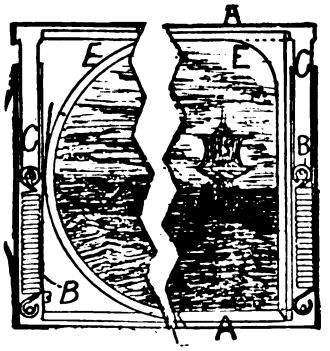

Magic-lanterns.—Relates to carriers for magic-lantern slides for use in the lantern. The carrier is composed of square tubes, the ends C, C sliding telescopically, and being drawn together so as to clasp the slides E, E by springs B, B. The inner sides of the top and bottom tubes A, A are cut away to form grooves for the glasses to rest in.

16,070. Erdmann, A. Nov. 6.

Curves, reproducing.—Relates to a curve transferrer consisting of a straight edge A, which is used as a "base," and acts also as a handle, and a series of links B so pivoted that when pressed against a curve *m* they retain its shape while the instrument is being handled freely.

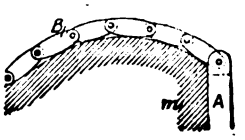

16,090. Green, B. Nov. 7. *Amended.*

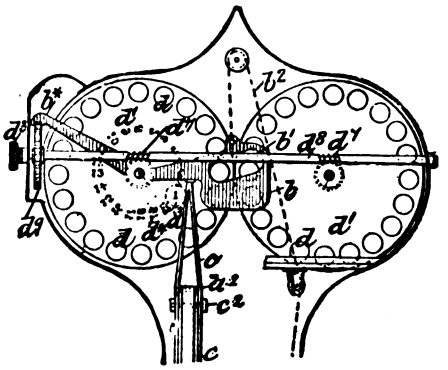

Sight-testing apparatus.—The apparatus may be variously arranged, but the Figure shows a convenient form where the lenses are interchangeable, the object to be observed as a test being fixed. The lenses *d* are arranged in a circle round discs d^1, which can be simultaneously revolved by the worms on d^7, d^7 on a cross-spindle d^8 turned by hand outside the casing. The casing is provided with eye-holes opposite which the lenses come in pairs, but normally a pivoted shutter *b* lies in the line of sight. This shutter is connected by a cord b^2 with a weight or spring by which it is held in position until a person stands on the platform of the machine or operates an external handle, by which means the cord b^2 is slackened. The apparatus still remains locked by coin mechanism, but on the insertion of a coin a light spring or weight moves the shutter from the eye-holes, and in so doing takes a locking-detent $b^\times$ out of a toothed wheel d^9 on the spindle d^8, so that the lenses may be moved as required. Numbers d^4 indicating the power of the lenses show through an aperture d^3 in front of the case. In a modified form, lenses are fixed in the eye-holes, and a sliding frame carrying the sight test (such as printed matter), is moved backwards or forwards by the rotation of the spindle d^8, the frame working keys by which

Digitized by Google

indicating-tablets are raised in front of an aperture in the casing. Instead of employing a shutter in the line of sight, a shutter sliding over the lighting window of the case may be substituted. The coin is inserted through a^3 and runs down the sheet c which is pivoted at c^3 and held in normal position by a light spring. During the descent of the coin the shoot tilts slightly and a locking-arm c attached to it is drawn away from under the shutter b which, being free of the tension of the cord b^2, moves under the influence of its spring or weight so as to bring the slit b^1 into the line of sight. The coin mechanism may be dispensed with.

16,432. Lanchester, F. W. Nov. 13.

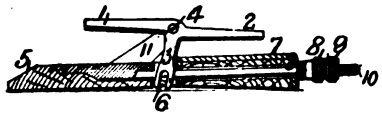

Rulers; section-lining apparatus.—The instrument is intended for section lining, shading, &c., and consists of a ruling-edge and a guide so connected that they can be moved forward alternately, step by step, by pressing upon opposite ends of a lever, the distance between the lines being regulated by a cam, wedge, or screw device. The Figure shows one form of the instrument, which may be variously modified. 5 is the ruling-edge, to which is fixed a bracket 11, carrying a three-armed lever 1, 2, 3, pivoted at 4. The screw rod 10 is rigidly attached to the ruler 5, and passes freely through the guide 7; at its end is a nut 8 and lock-nut 9 by which the "play" is adjusted. The forked end of the arm 3 engages a projecting pin 6 on the guide 7. By pressing alternately on the arms 1 and 2, the ruler 5 is held fixed and the guide 7 moved along the paper, and *vice versâ*. The instrument can be adapted also for ruling radial lines at equal angular distances.

16,457. Brodie, G. G., and **Prior, J. D.** Nov. 13.

Thermometers for ovens. The changes in length of three bars c, d, e mounted on the oven door are transmitted by magnifying-levers k, l, m to an indicating-sector s, moving behind an aperture.

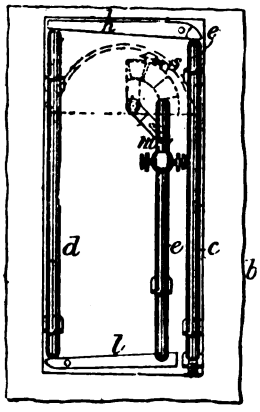

16,468. Phalp, O. Nov. 13. *Drawings to Specification.*

Compasses, magnetic.—A ship's binnacle is fitted with a glass top and can be used as a skylight and ventilator.

16,538. Comitti, L. Nov. 14.

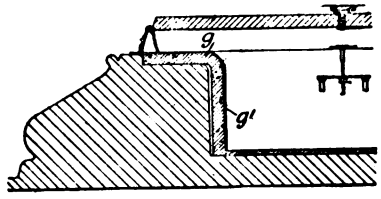

Barometers.—Consists in forming the dial g and the lining g^1 of an aneroid barometer in one piece of porcelain or pottery.

16,586. Newton, H. C. Nov. 14.

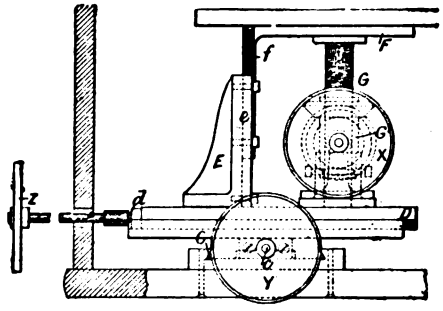

Magic-lanterns; lantern microscopes.—Relates to lamps for magic-lanterns, more particularly for lantern microscopes, and consists in a means of adjusting the lamp (especially when an electric-arc lamp is employed) accurately in the optical centre. For this purpose the lamp is mounted on the table F carried by a screwed pillar G rigidly attached thereto and guided by the plate f sliding in guides e in the bracket E. The pillar G passes into a nut G^1 which is rotated by bevel or other gear from a milled head X. The horizontal adjustments along the optical axis and at right-angles thereto are obtained by means of slides D, C actuated similarly to the slide-rests of a lathe by means of milled heads Y, Z on screw spindles c, d. The upper slide D carries the supports of the table F. The invention is also applicable to pendent lamps.

16,663. Reynolds, W. J. Nov. 16.

Bearings, instruments for determining.—Relates to the construction of shadow pins and the means of attaching the same or other like devices to the

Digitized by Google

compass glass. In Fig. 1 the shadow pin F is connected by a spring joint G with a boss E fixed to the ring A. In the boss E works a spring pin D

FIG. 1.

FIG. 3.

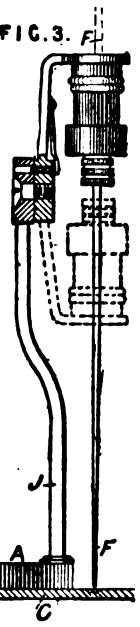

which clips into a central hole drilled in the compass glass C. B is a suction washer which, being pressed down on the glass, holds the device firmly in position. The spring joint G allows of the yielding of the pin F in case of it being struck accidentally; a similar yielding pin may be fixed to the glass by a screw passing through a central hole of the rim and secured by a nut. In Fig. 3 the shadow pin is shown reversible and supported by the standard J, fixed to the ring A. In this case the ring is attached eccentrically by its suction washer, and the pin F brought over the central hole in the glass.

16,695. Green, T. Nov. 16.

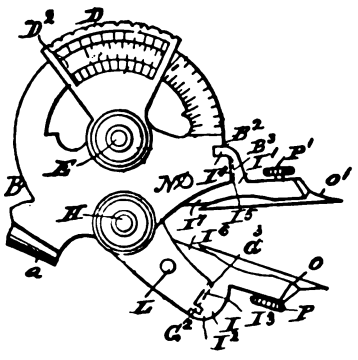

Dividers.—A circular plate B, graduated on both sides, has pivoted at its centre a double quadrant D, having reading-windows D^2, the edges of which are graduated as verniers. The quadrant gears on the front side with a toothed sector pivoted at the bottom of the plate B. Screws E, H pass through the pivots and carry clamping-screws. Legs I, I^1 carrying points O, O^1, adjustable by screws P, P^1, are secured to the toothed sector and plate B respectively, by screws L, N. The joints are made rigid by spurs I^6, I^7, bevels G^2, I^2, B^3, I^5, and pegs and notches G^2, I^3, I^4, B^2.

16,720. Cooper, A. J., and Wigzell, E. E. Nov. 17.

FIG. 1.

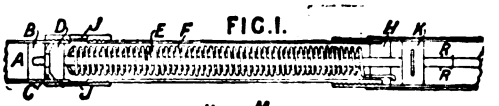

FIG. 2.

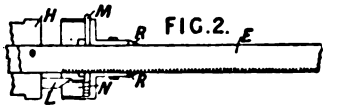

Sounding-apparatus.—The instrument, which is of cylindrical shape, is fitted into an outer cylindrical case, having a water buffer or spring, or both, to deaden the shock on striking the bottom; it is fixed in the casing by means of a swivelling loop on the latter taking into the slotted end of the former. A long square rod E is fixed at one end to the piston D, B, with a saucer-shaped dermatine washer C between by which a tight joint is effected. The water entering through holes J forces the piston down the tube A, according to the pressure against the action of the spring F. On the rod E, on which are cut fine rack teeth, slides the indicator K, the details of which are shown in Fig. 2. A sliding part M, N, through which the rod passes, is normally forced upwards by a spring, so as to come into the teeth of the rack. As the piston is being pushed down by the pressure the part N is brought against a wedge-shaped piece L on the block H and the grip of the indicator released. As the pressure diminishes, on drawing up the instrument, the springs R, R carry the indicator with the rod, and when free of the wedge L, the grip of the piece M, N prevents any jerk from altering the position of the indicator. The position of the indicator after the sounding shows the pressure through a graduated slit in the case. By pressing down the part M the grip may be released for returning the indicator to zero. Details of the indicator may be varied. The line is composed of a thin core of hemp or cotton, covered with twisted wire strands, over which is woven hemp or cotton steeped in a solution of gutta-percha or Stockholm tar. The winch employed is provided with brake gear, and the fair-lead pulley is swung on a counterweighted lever which, while the line is running out, swings over to one side, but as soon as the sounder touches the bottom the counterweight pulls the lever down and an automatic catch holds it in this position, giving a signal for applying the brake.

Digitized by Google

16,785. Adams, W. P. Nov. 19.

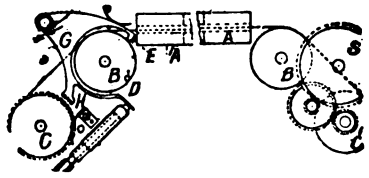

Magic-lanterns, slides for. Consists in constructing slides of flexible and transparent substance, such as gelatine, algin compounds, or celluloid, in square form or in strips. The strips prepared by photography may be wound from one roller to another on either side of the lantern stage, either by hand or mechanically. The Figure shows apparatus on the latter principle. The strip passes from the roller C over B and through a frame A in front of the objectives to the rollers B and C^1; the latter is driven by a spring barrel S. One revolution of the rollers corresponds to the length of a picture, and at each revolution of B the catch E on the lever G falls into a notch D and the teeth H into the teeth of the wheel C, thus locking the picture in position. A pneumatic device worked by squeezing an india-rubber ball frees the detent G and allows the slide to change, too rapid movement being prevented by a brake.

16,992. Rae, C. S. Nov. 22.

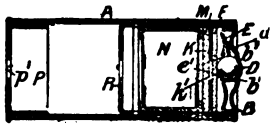

Microscopes.—In simple microscopes, a single spherical lens D is employed, which is held by the edges b, b^1 of a circular aperture in a cap B, and the edges e^1 of a similar aperture in a metal plate E, pushed down within the cap B. A projecting wire fills up the hole formed in the lens during manufacture and serves to steady it. A glass plate F, carrying the object, is next pushed down the cap against the lens, or two glass plates F and M, separated by a distance-piece K, having an aperture k^1, serving as a live-box, are used. The parts are then held in position by the tube N. The cap B, with its fittings, is placed in a (preferably square) body A having a cap P, with square aperture p^1, to act as a concentrator of light. Additional concentrators, such as R, may be introduced. The details of the apparatus may be somewhat varied.

17,007. Hook, H. Nov. 22. *Drawings to Specification.*

Kaleidoscopes.—Relates to apparatus for exhibiting moving figures, kaleidoscopes, and the like, which can be operated by the user after he has introduced a coin into the machine. The invention is described in connection with a dancing figure; but it is stated to be applicable also to kaleidoscopic apparatus.

17,326. Armstrong, A. W. Nov. 28.

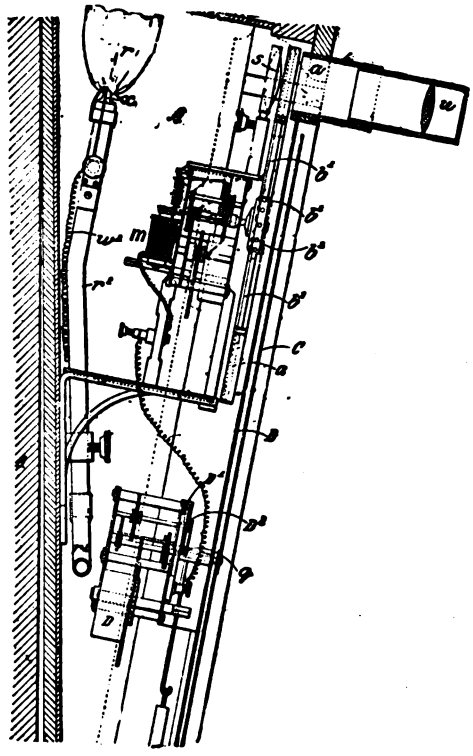

Magic-lanterns.—Relates to means for displaying pictorial and other advertisements in dark places or at night, and also for indicating the departure &c. of trains. The representation a is thrown on the clock face B of the case A, or on any other suitable surface, by means of a magic-lantern lens u in combination with a reflector, the light from the flame r being condensed on the object by a lens s. The objects a are changed automatically, being preferably mounted on radial arms b^1 on a shaft C, actuated by clockwork. The shaft C is arrested by a detent pinion in connection with the armature of the electromagnet m, and the shaft will be released to change an object each time the circuit of the electromagnet is made. The circuit is made at intervals by clockwork D, on the escapement pinion D^1 of which are a number of studs D^2 for making connection with the spring contact q. The frequency with which the objects are changed will thus depend on the number of projections on the pinion. The gas, which ascends by the pipe r^2, is automatically lighted by means of an ordinary electric lighter x, connected with an electromagnet by the wires w^2, the wires being in connection with the gas plug or valves, so that contact is made when the valve is opened. The circuit of the electromagnet m is also in connection with the valve, so that the objects will not be changed until the apparatus is lighted. A method is described for automatically extinguishing the light. The gas plug or valve is actuated by a spring which closes the valve, when an electrically and clock-controlled pawl engaging with a ratchet pinion on

Digitized by Google

the plug is withdrawn. A modification is described with regard to the manner of changing the objects by means of electricity, in which the objects are carried in frames supported in sockets on a horizontal circular frame. Instead of gas, an electric light may be used. The case may also have a clock face on opposite sides to receive the images.

17,656. Hinks, J. Dec. 4.

Stands.—Relates to extension standards for lamps and other articles. A lever *d*, pivoted at *e*, presses upon a disc *g* at the top of the rod *f*, the lower end of which is connected by a cross-piece *h* to a short tubular piece slit at *i*. The spring *k* normally forces upwards the rod *f* and jams the split tube *i* between the standard *a* and the conical end *c* of the tube *b*. By depressing the lever *d* the tube *i* is forced downwards so that the tube *b* may be raised or lowered. The cone *c* may be situated on the end of the rod *f*, a split tube or expansible wires being formed on, or attached to, the lower end of the tube *b*.

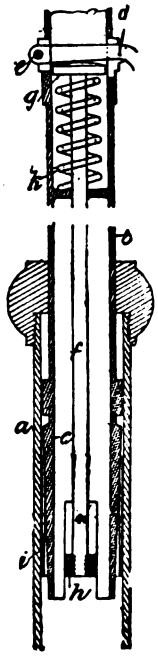

17,711. Reynolds, W. J. Dec. 4.

Compasses, magnetic.—Relates to means for conveying a test compass to a place out of the magnetic influence of the ship, and then clamping its card in position for comparison with the ordinary compass. The Figure shows an arrangement for raising the test compass to a height above the deck. A pulley G is mounted in a frame I, supported from a cross-rope between two masts; the arms J on the frame I are connected to ropes Z, which act as guides to the compass, and which are fastened at their lower ends to eyes K on the head B of a pedestal A, a spring in the latter giving the required tension. In the head B is a second pulley C, and the frame Q carrying the test compass is attached at the top and bottom to a rope Y, which passes round the pulleys C, G. The pulley C can be turned by the handle X, and is frictionally connected to a ratchet and pawl arrangement, which prevents the compass when raised from running down, but allows it to be hauled down by exerting sufficient force on the handle to overcome the friction. Rollers P, P embracing the guide-ropes steady the movement of the compass frame; shocks are prevented by spring buffers R, R, and violent oscillations by a flywheel device connected with the gimbals or by a bar on the compass working in liquid. When raised to its highest point, the lever T on the compass frame engages a spring catch U; time is then allowed for the card to get steady, and the cord O is pulled, setting free a spring device V and special clamp, which grips the card and holds it in position until the compass is again lowered. In a modification, the compass frame may be run down a rope passing over the stern of the vessel, and having a winged float at its end.

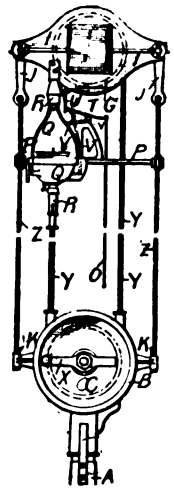

17,854. Lake, H. H., [*Vermelrren, N.*]. Dec. 6.

Rulers.—A thin rectangular strip M, of porcelain, metal, or other suitable material, is fixed between two narrower strips H, H of wood, so that the projecting parts can be used as the ruling-edge, without danger of blotting the paper.

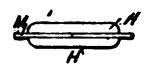

18,019. Lilley, G. C. Dec. 10.

Compasses, magnetic.—Relates to spirit or liquid compasses. The glass A has a bevelled edge, and is secured by a ring made in two portions *b*, *c* which can be attached to or removed from the compass bowl at *d* by screwing or otherwise, without disturbing the setting of the glass. The annular space *a*, which is invisible from outside the compass, is thus provided, and any air-bubbles in the liquid rise into this and cannot be seen. The rubber packing at *d*, when such is used, being out of contact with the liquid, does not discolour it. To allow of the bowl being entirely filled with liquid without fear of bursting from expansion, a spring relief valve *f* is employed.

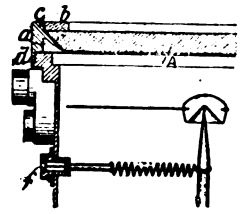

Digitized by Google

18,150. Tourtin, E., and **Parsy, L.** Dec. 12.

Magic - lanterns.—Relates to instantaneous shutters for photographic cameras, magic - lanterns, and projecting apparatus. The shutter, which may be in front, behind, or between the lenses, is of the venetian - blind type, the laths *c* being pivoted to the frame of the camera &c. On the pivots at one side are mounted pinions *d* which engage with a rack *e*. The rack is actuated to revolve the laths by an adjustable spring *g* when the spring catch *f*, which secures the rack, is disengaged by a pneumatic &c. arrangement.

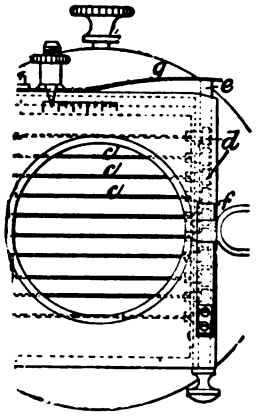

18,324. Heys, W. E., [*Schaeffer & Budenberg*]. Dec. 15.

Logs.—Two tubes *d*, *s* leading from air chambers in the vessel end in a mouthpiece M under the bow, the tube *d* opening forwards, and the tube *s* backwards. The motion of the vessel through the water increases the pressure in one air vessel, and reduces it in the other. The speed is consequently shown by diaphragm gauges, having tubes from the air vessels opening on opposite sides of the diaphragm. The air vessels are placed below the water-line to prevent the possible withdrawal of the water within them when in a rough sea.

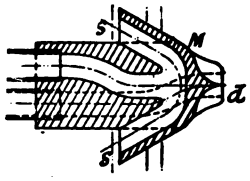

18,404. Brownlow, W. H., and **Warner, J. S.** Dec. 17.

Spectacles and eyeglasses, attaching to hats. A lug d^1 on the nosepiece d^2 of the eyeglasses or spectacles is connected by lazy-tongs D^1 to a lug *d* attached to a spindle B, mounted in lugs *a* fixed to or cast on a plate A attached to the underside of the brim or front part of the head gear. A coiled spring *b* holds the glasses at any desired point.

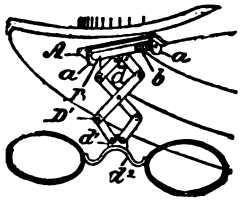

18,438. Lancaster, E. B. Dec. 18.

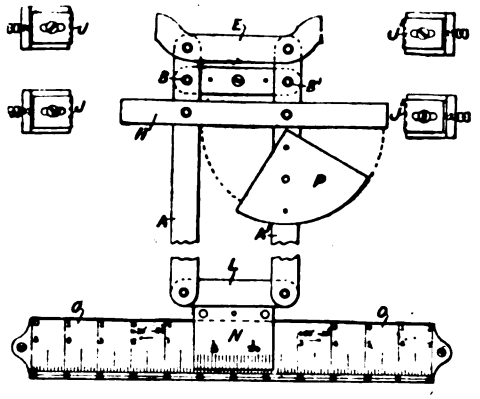

Angle-measuring instruments.—Relates to a micrometer gauge with angle-measuring devices. Two bars A, A^1 swivelling about pins B, B^1 are connected, as shown, by parallel links E, H, L, the last of which is ten times further from the pins than the other two. This link also carries a vernier N which travels over a scale O. An object to be measured is nipped between the ends of the links and two pairs of fixed blocks J, J^1. A ten times magnified reading is given on the scale. For measuring angles, a quadrant P is fixed to the bar A^1. The bars are turned till the link H and one radial edge of the quadrant lie on the faces of which the inclination is to be measured. The reading on the scale gives the sine of the angle through which the bars have been turned.

18,542. Perken, E., Perken, F. L., and **Rayment, A.,** [*trading as* Perken, Son, & Rayment], and **North, C. G.** Dec. 19.

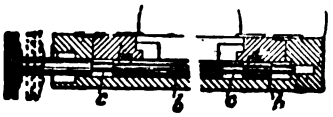

Microscopes.—Relates to focussing-apparatus for cameras which is stated to be applicable for microscopes. The rack pinion *b* has reduced portions *c* by which the pinion can be thrown in or out of gear on sliding the same longitudinally. The recessed portion or portions may be so arranged that the rack of one slide may be in gear while that of another is out of gear.

18,553. Benson, C. A. Dec. 19.

Telemeters.—Two parallel bars A turn together on trunnions in a fork E, F, having azimuthal motion on a tripod top H. At one end of these

Digitized by Google

bars a telescope J is mounted on a vertical axis. A binocular telescope is provided which has one of its tubes bent at right-angles and fitted with a mirror. The line of sight is at right-angles to a

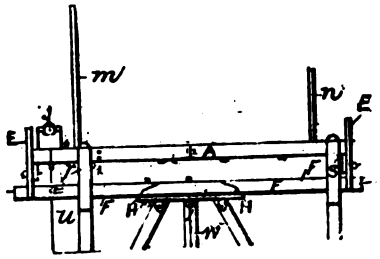

keel which fits between the bars A. Plates m, n marked with lines are carried by blocks sliding between the bars, and rods r, s are suspended from them. Plumb lines u, w hang from the two telescopes, the line w registering with a graduation on the bars A. Both telescopes are directed on an object the distance of which is measured, and the telescope J is clamped. Other distances are measured by similar triangles, and a tape measures the base line. The observer sights first with the clamped telescope, then moves a flank, till, at the same time, the lines on the plates m, n coincide with cross-wires in the bent tube, and the object coincides with a wire in the unbent tube.

18,752. Lorrain, J. G. Dec. 22.

[*Thermometers.*—Relates to means for indicating readings at a distance. An electric circuit includes a galvanometer, graduated for temperature as well as for electric units if desired, and a varying resistance, controlled by a thermometer. The invention is shown as applied to an air thermometer for testing grain. A change of volume of the air alters the level of mercury in the U tube a, and so the length of a high-resistance wire a^1; the needle of the galvanometer C is thus more or less deflected. Greater sensitiveness is obtained by coiling the wire a^1. In other forms, a mercury thermometer may be employed, or a Bourdon pressure chamber, a piston at the top of which presses together, with varying force, a series of carbon discs, included in the galvanometer circuit.

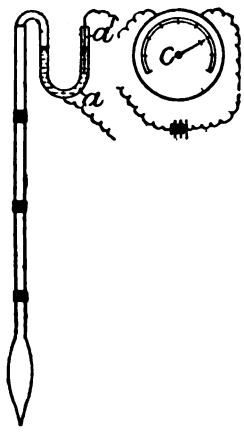

18,815. Lake, H. H., [*Fiske, B. A.*]. Dec. 24.

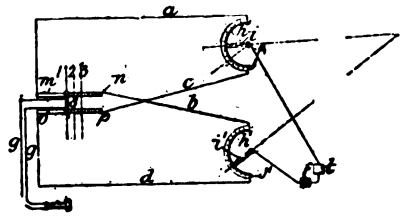

Telemeters.—The object is sighted from a base, and an electric arrangement is used to determine the difference between the angles, or the distance, at a station away from the sighting-points, or at one of them, without consulting the other. The arcs J, J^1 on which the sighting-telescopes i, i^1 turn are made of suitable electric resistance, and are connected, as shown, by wires a, b, c, d, with two parallel resistance bars m n and o p, along which, by a slider s, the terminals of a telephone wire g can be moved. A Wheatstone bridge is thus formed for the circuit of an electric battery f containing a contact-breaker t. The resistance ratios in the arms of the bridge depend on the arc readings h, h^1 of the telescopes and the position of the slider s on the bars. The slider is shifted from the centre of the bars till no sound is heard at the telephone, when the reading gives either the difference between the arcs h, h^1 or the actual distance required.

18,912. Villepigue, A. E. D. F. de. Dec. 27.

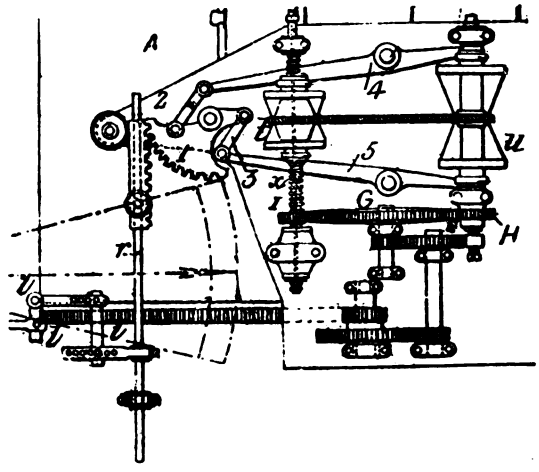

Surveying-instruments; clinometers.—The apparatus is designed to record graphically the gradients, difference of level, &c. of the ground, and consists of a carriage with one wheel, provided at either end with shafts so that it can be carried along by two men. The wheel runs on the ground, and is geared with a drum round which the diagram paper is stretched. A fixed pencil presses on the drum and draws a horizontal line, while the pencil for

Digitized by Google

THE NEW YORK
PUBLIC LIBRARY
ASTOR, LENOX AND
TILDEN FOUNDATIONS.

PATENTS FOR INVENTIONS.

ABRIDGMENTS OF SPECIFICATIONS.

CLASS 98, PHOTOGRAPHY.

PERIOD—A.D. 1884–88.

LONDON:
PRINTED FOR HER MAJESTY'S STATIONERY OFFICE,
BY DARLING & SON, LTD., 1, 2, 3 & 5, GREAT ST. THOMAS APOSTLE, E.C.
PUBLISHED AT THE PATENT OFFICE, 25, SOUTHAMPTON BUILDINGS,
CHANCERY LANE, LONDON, W.C.

1896.

PRICE ONE SHILLING.

Digitized by Google

Digitized by Google

THE NEW YORK
PUBLIC LIBRARY
ASTOR, LENOX AND
TILDEN FOUNDATIONS.

PATENTS FOR INVENTIONS.

ABRIDGMENTS OF SPECIFICATIONS.

CLASS 98, PHOTOGRAPHY.

PERIOD—A.D. 188 8.

LONDON:
PRINTED FOR HER MAJESTY'S STATIONERY OFFICE,
BY DARLING & SON, LTD., 1, 2, 3 & 5, GREAT ST. THOMAS APOSTLE, E.C.
PUBLISHED AT THE PATENT OFFICE, 25, SOUTHAMPTON BUILDINGS,
CHANCERY LANE, LONDON, W.C.

1896.

Digitized by Google

THE NEW YORK
PUBLIC LIBRARY
ASTOR LENOX AND
TILDEN FOUNDATIONS.
1898.

THE ASTOR LIBRARY
NY

Digitized by Google

EXPLANATORY NOTE.

The contents of this Abridgment Class may be seen from its Subject-matter Index. For further information as to the classification of the subject-matter of inventions, reference should be made to the *Abridgment-Class and Index Key*, published at the Patent Office, 25, Southampton Buildings, Chancery Lane, W.C., price One Shilling, postage (parcel post) Sixpence.

It should be borne in mind that the abridgments are merely intended to serve as guides to the Specifications, which must themselves be consulted for the details of any particular invention. Printed Specifications, price Eightpence, may be purchased at the Patent Office, or ordered by post on the Patents Form C[1] (to be obtained from any Post Office), no additional charge being made for postage.

SUBJECT-MATTER INDEX.

Abridgments are printed in the chronological order of the Specifications to which they refer, and this index quotes only the year and number of each Specification.

Actinometers. *See* Photometers and actinometers.

Camera stands, Tripod and like. *See* Tripod and like stands.

Collotype printing. *See* Printing, Photo-mechanical.

Dark-room lamps. *See* Photography.

Dark-rooms, Photographic. *See* Photography.

Emulsions, Making. '*84*. 11,907. 12,562. '*85*. 1232. 14,957. '*86*. 3466. 6588.
centrifugal machines. *See Abridgment Class* Centrifugal drying &c.
photographic emulsions. *See* Photography.

Magnesium and like powder lamps. *See* Photography.

Measuring intensity of light. *See* Photometers &c.

Mounting photographic prints and the like. *See* Photography.

Photograph albums. *See Abridgment Class* Books.

Photograph holders and cases. *See Abridgment Class* Books.

Photograph mounts. *See Abridgment Class* Artists' instruments &c.

Photographs, Displaying for sale or inspection. *See Abridgment Class* Advertising &c.

Photographs, Postal wrappers for. *See Abridgment Class* Writing-instruments &c.

Photographs, Preservative compositions for. *See Abridgment Class* Paints &c.

Photography:
actinometers. *See* Photometers and actinometers.
attracting sitters' attention, arrangements for. *See* studio accessories *below*.
automatic apparatus for taking and finishing photographs. '*87*. 16,136. '*88*. 1466. 5140. 7427. 12,915.
backgrounds. *See* studio accessories *below*.
boxes and cases for printing-paper. *See* plate &c receptacles *below*.
burnishing. *See* finishing *below*.

Digitized by Google

Photography—*cont.*
cameras—
attaching dark slides to. '*84*. 3026. 14,335. '*85*. 3766. 12,870. 13,956. '*86*. 4179. 7951. '*88*. 13,868.
automatic. '*87*. 16,136. '*88*. 1466. 5140. 7427. 12,915.
backs. '*84*. 3026. 8721. 9461. 11,212. 12,772. 13,318. 14,156. 14,335. 15,887. 16,087. 16,334. '*85*. 1120. 5938. 10,594. 11,386. 12,870. 13,956. 14,867. '*86*. 2365. 4179. 5450. 7155. 9756. 13,549. 14,262. 15,187. 15,661. 16,605. '*87*. 541. 1533. 2042. 4808. 7464. 16,648. '*88*. 8193. 8447. 13,868. 18,099.
baseboards and tailboards. '*84*. 8. 319. 6688. 11,212. 12,389. 15,887. '*85*. 1120. 2496. 5364. 5938. 5965. 10,594. 11,386. 12,870. '*86*. 2039. 2365. 2670. 2811. 5450. 7155. 9756. 13,240. 14,262. '*87*. 541. 1533. 2042. 7464. 10,103. 16,648. '*88*. 3076. 8193. 8447. 12,573. 13,868. 18,026. 18,099.
bellows. '*85*. 1072. 9288. 11,386. 12,870. '*86*. 2365. 15,187. '*88*. 16,894.
book form. '*84*. 6688. '*86*. 7121. '*88*. 1510.
cases for. '*86*. 9655. '*88*. 17,328. 18,026.
change-boxes. *See* change-boxes *below*.
clamps. *See* stand attachments *below*.
coin-freed. '*87*. 16,136. '*88*. 1466. 5140. 7427. 12,915.
combined with—
change-boxes. '*84*. 10,950. '*85*. 4288. 9288. '*86*. 2876. 9645. '*87*. 6613. 13,879. '*88*. 1510. 4145. 4149. 4248. 5462. 7942. 9327. 14,652. 15,454. 16,894. 18,403. 18,640.
changing-bags and the like. '*84*. 4989.
compasses, magnetic. '*84*. 9461.
dark slides. '*84*. 3026. '*85*. 3766.
ordnance sighting-apparatus. '*85*. 7422. '*88*. 14,820.
roller slides. '*85*. 8722. '*86*. 7121.
sensitized plates and films. '*87*. 7790.
telemeters. '*88*. 14,820.
copying. '*88*. 18,542.
cutting off polarized light. *See* screening lens *below*.
dark slides. *See* dark slides *below*.
detective. *See* instantaneous *below*.
enlarging. '*86*. 15,187. '*88*. 18,542.
extensible backs to enable larger plates to be used. *See* backs *above*.
fastenings. '*84*. 8. 6688. 12,389. '*86*. 1675. 2039. 2365. 2384. 4179. 9756. '*87*. 4718. 10,103. '*88*. 8447. 18,099.
finders. '*84*. 17,002. '*86*. 2876. 6013. 13,549. '*87*. 6613. 7121. '*88*. 4248. 6814. 11,300. 14,652. 17,328. 18,026.
focussing-devices. '*84*. 8. 7201. 8463. 10,950. 15,887. 16,087. '*85*. 1072. 1120. 4288. 4528. 5364. 5938. 5999. 8313. 8722. 9288. 12,870. '*86*. 2670. 2811. 2876. 5793. 6013. 7155. 9645. 9756. 13,549. 15,873. '*87*. 1533. 4718. 6076. 6613. 7121. 7464. 10,103. 16,648. '*88*. 2382. 4248. 5462. 5869. 6814. 7432. 8193. 8447. 9327. 10,823. 12,573. 13,868. 14,652. 15,454. 16,894. 18,026. 18,542.
folding up. *See* packing &c. *below*.

Photography—*cont.*
cameras—*cont.*
for producing photographs of special character. '*84*. 9461. '*85*. 3134. 6973. 7422. 14,867. '*86*. 2068. 6316. '*88*. 423.
fronts. '*84*. 6688. 7201. 9461. 12,389. 15,887. 16,087. '*85*. 1120. 2496. 4288. 5938. 10,594. '*86*. 1675. 2670. 5450. 7155. 9756. 13,240. 13,549. 15,187. '*87*. 541. 1533. 4718. 7464. 10,103. 16,648. '*88*. 3076. 5462. 8193. 8447. 13,868. 18,099.
instantaneous. '*84*. 10,950. 17,002. '*85*. 4102. 7422. '*86*. 6013. 7121. 9655. 11,365. 12,571. 13,549. 15,661. '*87*. 6076. 6613. '*88*. 423. 1510. 2382. 4145. 4248. 5462. 6950. 7427. 7432. 7942. 9327. 10,823. 11,300. 14,652. 15,454. 17,328.
jointed or spring stays connecting back and front frames. '*84*. 1622. '*86*. 15,873. '*87*. 7464.
lens boards. '*84*. 6688. '*85*. 10,594. 11,386. 12,870. '*86*. 2811. 13,240. 13,549. 15,661. '*88*. 13,868. 18,099.
lens fittings. *See* lenses and lens fittings *below*.
masks and masking. *See* masks &c. *below*.
materials for. '*86*. 5793.
packing and folding-up. '*84*. 8. 1622. 6688. 12,389. 14,156. 15,887. '*85*. 4102. 5938. 5965. 9288. 10,594. 11,386. '*86*. 1675. 2039. 2365. 2670. 5450. 7121. 7155. 8654. 9756. 10,783. 12,571. 13,240. '*87*. 541. '*88*. 3076. 6814. 8193. 12,573. 13,868. 18,026. 18,099.
panoramic. '*84*. 9461. '*87*. 6673.
pin-hole. '*86*. 8654. '*87*. 7790.
pocket. '*84*. 1622. '*86*. 8654. 10,783. 12,571.
roller slides. *See* roller slides *below*.
screening lens. '*84*. 114. 9461. '*86*. 4375.
shutters. *See* shutters *below*.
stand attachments. '*84*. 319. 1898. 5647. 15,887. '*85*. 5364. 5965. 10,594. '*86*. 2365. 5636. 9756. 13,240. '*87*. 7464. 10,841. 10,844. 16,648. '*88*. 3782. 8193. 8447. 12,573. 13,868. 18,026. 18,796.
stands. *See* camera stands &c. *below*.
stereoscopic. '*86*. 2068. 6316.
turntables. *See* stand attachments *above*.
used also as—
magic-lanterns. '*86*. 15,187.
watch form. *See* pocket *above*.
zoetropic. *See* for producing photographs of special character *above*.
camera stands or supports. '*84*. 5647. '*86*. 2423. '*87*. 3270. '*88*. 3779. 5666. 8447.
camera attachments. *See* cameras *above*.
tripod and like stands. *See* Tripod &c. stands.
chairs. *See Abridgment Class* Furniture &c.
change-boxes. '*84*. 5353. 10,950. '*85*. 4288. 5725. 8313. 9288. '*86*. 2876. 8010. 8329. 9645. '*87*. 6032. 6613. 13,879. '*88*. 1510. 4145. 4149. 4248. 5462. 7942. 9327. 10,823. 14,652. 15,454. 16,894. 18,357. 18,403. 18,640.
changing-bags and the like. '*84*. 4989. 5353. '*85*. 8313. 9288. '*86*. 9645. 14,931. 16,605. '*87*. 6032.
chemicals, storing, conveying, and applying, [*use not specified*]. '*84*. 416.
bottles, jars, and like vessels. *See Abridgment Class* Stoppering &c.

Digitized by Google

Photography—*cont.*
chemicals, storing &c.—*cont.*
boxes and cases. *See Abridgment Class* Boxes &c.
burettes, pipettes, and the like. *See Abridgment Class* Acids, alkalies, &c.
clearing. '*86*. 16,327. '*87*. 12,168. 17,693.
coating plates. *See* sensitized plates &c. *below*.
coin-freed apparatus. '*87*. 16,136. '*88*. 1466. 5140. 7427. 12,915.
colouring. '*84*. 1251. 4144. 7190. '*85*. 5052. 6204. 10,808. '*86*. 14,120. 14,401. '*87*. 4915. 5080. '*88*. 4537. 8518. 13,301.
copying documents, drawings, and the like. '*84*. 8771. 16,979. '*85*. 4191. 6359. '*87*. 3139. 10,814. 12,168. '*88*. 1026. 8518. 14,948. 16,715. 18,542.
dark rooms. '*85*. 14,239. '*86*. 14,931. 16,012. '*87*. 17,893. '*88*. 1291. 4692. 9283.
dark slides. '*84*. 3026. 4906. 5686. 8721. 14,156. 14,335. 16,727. '*85*. 3134. 3766. 5965. 8313. 13,956. 14,867. '*86*. 2390. 3269. 3325. 5181. 7359. 8010. 8329. 16,605. '*87*. 1533. 1637. 9948. '*88*. 5462. 5869. 6814. 6992. 12,438. 13,868. 14,696. 16,894.
roller slides. *See* roller slides *below*.
developing. '*84*. 416. 8771. 15,202. '*85*. 4191. '*86*. 3061. 16,327. '*87*. 1681. 2763. 3139. 10,814. 12,168. 12,275. 15,727. 16,003. 16,136. '*88*. 1201. 1466. 5140. 8518. 9283. 10,865. 16,537. 16,677.
diaphragms, lens. *See* lenses &c. *below*.
diaphragms, lens, holders for when not in use. *See* lenses &c. *below*.
dishes. *See* trays &c. *below*.
drying. '*87*. 3530. 4202. 9402. 13,505. '*88*. 5140. 15,024.
dry plates. *See* sensitized plates &c. *below*.
embossing photographs. '*88*. 5055. 17,100.
emulsions. *See* sensitized plates &c. *below*.
enamelling. '*84*. 10,558.
enamels. '*84*. 10,558.
enlarging. '*86*. 15,187. '*88*. 18,542.
etching. *See* Etching, [*Abridgment Class* Printing other than letterpress &c.] ; Printing, Photo-mechanical.
exposures, determining. '*87*. 16,136. '*88*. 3615. 5545. *Excepting* Photometers and actinometers ; *for which see that heading*.
shutters, adjusting exposure by. *See* shutters *below*.
fastenings. *See* under articles fastened, *as* cameras ; dark slides ; &c.
films. *See* sensitized plates and films *below*.
finishing. '*84*. 4144. '*85*. 6204. '*87*. 789. 1830.
fixing. '*84*. 15,202. '*86*. 16,327. '*87*. 16,136. 17,693. '*88*. 1466. 5140. 10,865.
frames and supports for sensitized plates and films. *See* change-boxes ; dark slides ; *above* ; lifters or holders, plate and like *below*.
frames, printing. *See* printing *below*.
glass, cutting. *See Abridgment Class* Glass.
head-rests. *See* studio accessories *below*.
lamp reflectors for. '*84*. 11,556. '*85*. 5523. 8971. '*87*. 3998.
lamps—
actinic. '*85*. 15,629. '*86*. 167. 10,770. '*87*. 3998. 7035. '*88*. 356. 2730. 8508. 13,145.
Photography—*cont.*
lamps—*cont.*
dark-room. '*84*. 6898. '*85*. 4378. 8971. '*87*. 2634. '*88*. 13,145.
lenses and lens fittings. '*84*. 7201. 9461. '*85*. 7422. '*86*. 2068. 2670. 2811. 3879. 4375. 6316. 9655. 13,240. 13,549. 14,421. 14,931. '*87*. 5903. 13,186. '*88*. 1583. 5194. 6814. 7176.
lenses, calculating rapidity of. *See* exposures, determining *above*.
lifters or holders, plate and like. '*84*. 5686. 15,202. '*85*. 4288. 11,020. '*86*. 3269. '*87*. 12,275. '*88*. 10,865.
lighting, arrangements for, [*other than* lamps]. '*84*. 11,556. '*85*. 5523. 6368. '*87*. 3998. 7035.
magic-lantern slides, producing. *See* producing magic-lantern slides by *below*.
masks and masking. '*85*. 4288. '*86*. 9155. 16,356. '*87*. 2012.
mounting prints and the like. '*84*. 4144. '*86*. 13,580. '*87*. 5772. '*88*. 18,562.
mounts. *See Abridgment Class* Artists' instruments &c.
negatives producing by other means than photography. '*84*. 13,640. 16,979.
negatives, washing. *See* washing *below*.
ornamenting by. '*85*. 14,468. '*86*. 358. '*88*. 1026. 8518.
paper for, making. *See Abridgment Class* Paper &c.
paper stretchers. *See* frames &c. *above*.
photo-mechanical printing-surfaces. *See* Printing, Photo-mechanical.
photometers. *See* Photometers &c.
photo-telegraphy. *See Abridgment Class* Electric telegraphs &c.
plate and like boxes and receptacles. '*85*. 12,227. 13,262. '*86*. 11,615. '*87*. 9402. '*88*. 13,082.
plates. *See* sensitized plates &c. *below*.
positives, producing directly. '*87*. 3139. 12,168.
powders, magnesium and like, for producing light. *See* lamps *above*.
preservative compositions for use in. *See Abridgment Class* Paints &c.
printing. '*84*. 8643. 8771. 10,558. 15,757. '*85*. 1406. 3778. 5052. 8938. 11,446. '*86*. 3269. 9413. 10,770. 16,012. 16,356. '*87*. 1681. 2012. 5080. 10,814. 15,727. 16,003. '*88*. 5055. 14,948. 15,901. 16,715. 16,827.
photo-mechanical printing. *See* Printing, Photo-mechanical.
vignetting. *See* vignetting *below*.
prints, mounting. *See* mounting prints &c. *above*.
prints, washing. *See* washing *below*.
producing bird's-eye views. *See* producing photographs of special character *below*.
producing magic-lantern slides by. '*88*. 423. 13,301. 16,785.
producing photographs of special character, [*other than* transparencies]. '*85*. 3134. 6973. '*86*. 2068. '*88*. 4537.
racks. '*87*. 4202. 9402. 13,505. '*88*. 15,024.
receptacles for printing-paper. *See* plate &c. receptacles *above*.
reducing. '*85*. 11,446.
re-touching. '*85*. 3778. '*88*. 3352.
rocking-apparatus. '*85*. 11,020.

Digitized by Google

Photography—*cont.*
roller slides. '*84*. 15,542. '*85*. 3581. 8722. 9286. 11,055. 12,972. 13,261. 13,262. '*86*. 913. 7121. '*87*. 9948. '*88*. 423. 5536. 6950. 17,328.
rolling-apparatus. *See* finishing *above*.
sensitized plates and films. '*84*. 5686. 8643. 9461. 13,433. 13,596. 13,774. '*85*. 424. 2699. 3185. 4191. 7422. 8313. 8917. 9575. 13,463. 14,468. '*86*. 2390. 4965. 5654. 5793. 7963. 9460. 9886. 10,659. 11,365. 12,700. 13,580. 15,532. 15,727. '*87*. 2662. 3139. 3530. 5080. 6398. 7790. 9949. 10,814. 12,521. 13,725. 15,727. 16,018. '*88*. 405. 1026. 1201. 4537. 4874. 5055. 7044. 8518. 16,677.
glass and the like, cleaning. *See Abridgment Class* Washing &c.
photo-mechanical plates. *See* Printing, Photo-mechanical.
plate boxes. *See* plate &c. receptacles *above*.
printing-paper. *See* printing *above*.
shutters. '*84*. 2767. 7746. 7792. 8852. 13,156. 14,156. '*85*. 2241. 2759. 3766. 4102. 4531. 5014. 5181. 5363. 10,896. 15,162. 15,747. '*86*. 1365. 1432. 2384. 5386. 7156. 8190. 9522. 9645. 9655. 9788. 11,365. 12,238. 12,250. 12,755. 13,549. 14,410. 15,661. '*87*. 2382. 3922. 5903. 5923. 6076. 6613. 8711. 9948. 12,191. 12,940. 13,186. 13,844. 13,879. 16,136. '*88*. 423. 2382. 3259. 5140. 5619. 5755. 5869. 6583. 6814. 6950. 6992. 7176. 7427. 7432. 8739. 9327. 10,823. 11,300. 12,181. 12,438. 12,474. 12,707. 14,652. 14,696. 15,454. 16,224. 17,198. 17,298. 17,328. 18,150.
covers for dark slides. *See* dark slides *above*.
stands. *See* camera stands &c. *above*.
stretching-appliances for paper films and the like. *See* various subheadings *above*.
studio accessories. '*84*. 3866. 8566. 11,556. '*85*. 2888. 15,376. '*86*. 167. '*87*. 12,733. '*88*. 15,068. 15,723.
chairs. *See Abridgment Class* Furniture &c.
toning. '*86*. 16,327.
transferring films. *See* sensitized plates &c. *above*.
transparencies, [*other than* magic-lantern slides]. '*86*. 13,580. '*88*. 423.
trays and dishes. '*85*. 11,020. '*86*. 3061. '*87*. 2763. 6353. 12,275.
tripod and like stands. *See* Tripod and like stands.
varnishes for use in. *See Abridgment Class* Paints &c.

Photography—*cont.*
varnishing. '*85*. 491. 6204. '*88*. 5140.
vignetting. '*84*. 114. '*86*. 9155. '*88*. 15,376.
washing. '*84*. 712. 7678. 10,334. '*86*. 912. 14,099. 16,327. '*87*. 4202. 6353. 9402. 11,454. 12,292. 13,505. 16,136. '*88*. 1466. 5140. 9711. 10,864. 10,865. 15,024.
zoetrope transparencies, producing by. *See* transparencies *above*.

Photo-mechanical printing. *See* Printing, Photo-mechanical.

Photometers and actinometers. '*84*. 3771. 3881. 6312. 9931. 14,457. '*85*. 3755. '*86*. 4624. 14,548. '*87*. 11,985. 13,332. 15,907. '*88*. 6923. 11,578.

Printing, Photo-mechanical. '*84*. 2312. 2981. 3865. 4594. 5134. 9026. 9612. 13,103. 13,640. 14,885. 16,694. '*85*. 3134. 5909. 6359. 6368. 16,078. '*86*. 5205. 5595. 5596. 5654. 10,483. 13,380. 16,677. '*87*. 37. 1079. 7980. 9159. 11,135. 11,136. 15,722. '*88*. 171. 524. 1985. 4823. 7556. 9244. 12,307. 13,301. 14,593.

Standards, Telescopic. *See* Tripod and like stands.

Stands, Tripod and like. *See* Tripod and like stands.

Telescopic stands. *See* Tripod and like stands.

Tripod and like stands, [*including* Telescopic and other adjustable pedestals and standards]. '*84*. 1814. 3232. 3510. 5509. 5647. 12,855. 15,198. '*85*. 976. 2181. 5677. 8748. 11,959. 12,425. 14,205. '*86*. 899. 2039. 2423. 2495. 5636. 6936. 8866. 9970. 11,175. 13,620. 15,697. '*87*. 4270. 4710. 6459. 6780. 8998. 10,841. '*88*. 907. 3196. 3782. 5770. 7476. 9501. 9518. 10,368. 10,860. 11,257. 11,360. 13,868. 14,801. 17,656.
Excepting Reading-desks and music stands, [*Abridgment Class* Furniture &c.]; Stands, Card, photograph, and like, [*Abridgment Class* Furniture &c.];
for which see those headings.
camera stands, attachments for. *See* Photography.
velocipedes adapted for carrying. *See Abridgment Class* Velocipedes.

Digitized by Google

NAME INDEX.

The names in *italics* are those of persons by whom inventions have been communicated to the applicants for Letters Patent.

Abel, C. D. ..... '85. 14,957
Adams, W. P. ..... '88. 16,785
Alauzet, L. ..... '86. 16,677
Allison, H. J. ..... '86. 9655
Anderson, A. ..... '85. 11,020
„ W. B. ..... '84. 4144
Angerer, C. ..... '85. 3134
Anthony & Co., E. & H. T. ... '85. 3778. 13,261. 13,262
Arundel, S. D. ..... '86. 11,615
Ashcroft, T. H. ..... '88. 11,300
Ashford, J. ..... '84. 15,198 '85. 14,205. '87. 541
Atkinson, R. E. ..... '87. 2763
Atwood, W. S. ..... '84. 8721

Backelandt, L. ..... '88. 1201
Backus, Q. S. ..... '87. 17,893
Baker, F. R. ..... '88. 10,860
„ W. R. ..... '88. 16,894
Ball, E. J. ..... '87. 16,136
Barr, F. ..... '88. 907
Barrett, F. ..... '88. 13,082
Barry, J. H. ..... '84. 3881
Barthel, A. E. ... '86. 5595. 5596 5654
Bartos, J. ..... '87. 9159
Bausch, E. ..... '88. 7176
Bay, G. ..... '87. 12,168
Beauchamp, F. ... '87. 5903. 8711 13,844. '88. 5619. 12,438
Benson & Co., W. A. S. '88. 9501
Benson, W. A. S. ..... '88. 9501
Berkeley, H. B. ..... '87. 17,693
Berly, J. A. ..... '86. 16,677 '88. 14,593
Berry, J. L. ..... '87. 10,841 '88. 3779
Berthon, L. M. ..... '87. 7121
Billcliff, J. ..... '85. 13,956
Billing, F. ..... '88. 8518
Bishop, F. ..... '87. 2634
„ H. ..... '85. 4378
„ W. ..... '88. 356
Blackie, A. ..... '86. 3466
Blackmore, G. F. ..... '87. 4202
Bogaerts, H. ... '87. 11,135. 11,136
Böhm, E. ..... '88. 13,145
Bolas, T. ..... '85. 14,468
Boles, W. H. ..... '87. 789
Bond, H. C. ..... '88. 13,301
Bonnaud, J. B. G. ..... '88. 4537
Bouckaert, C. ..... '88. 12,707
Boult, A. J. ... '84. 13,596. 15,542 '85. 2181. 2888. 3185. 5725 12,972. '86. 15,661. '87. 3139 3530. 6673. 7790. '88. 1201 6950.
Brand, H. ..... '86. 16,012
Branson, F. W. ... '84. 2767. 8852 '85. 1120. 2241. '86. 5386 '87. 12,940.
Brewer, E. G. ..... '84. 11,907
Brice, W. ..... '88. 4149
„ *W. A.* ..... '88. 4149
Brookes, A. G. ... '84. 2312. 9612
„ W. ..... '86. 13,549
Broughton, V. W. Delves- ... '87. 16,648
Brown & Co., W. H. ... '88. 9518
Brown, A. R. ..... '88. 16,715
„ J. ... '84. 4594. '86. 6936 9460. '87. 12,521
„ J. E. ..... '85. 2496
Browne, A. ..... '86. 14,401
„ N. ..... '88. 18,640
Brunner, J. ..... '84. 2312. 9612
Brunner, J. ..... '86. 13,380
Bull, A. S. ..... '88. 12,915
Burmeister & Wain's Maskin & Skibsbyggeri ..... '84. 11,907
Burns, W. ..... '86. 14,931
Burt, H. A. ..... '88. 7427
Burton, H. J. ..... '87. 6398

Cadett, J. W. T. ..... '84. 13,156 '86. 9886. '87. 13,725
Cain, C. T. ..... '86. 13,580
Caldwell, G. ..... '86. 8010
Cantó, J. ..... '88. 1466
Cellérier, L. J. H. ..... '85. 5052 '86. 14,401
Chapman, J. T. ..... '84. 12,389
Charles, P. ..... '88. 9327
Chary, F. J. ..... '87. 3998
Clark, A. M. ..... '84. 5509. 9461 17,002. '85. 3778. 11,055 13,261. 13,262. '86. 13,580
„ F. G. ..... '87. 12,733
„ S. M. ..... '88. 6814
„ W. ..... '87. 6076
Collardon, L. ... '86. 5595. 5596 5654
Collins, T. J. ..... '87. 10,103
Connon, J. R. ..... '87. 6673
Cooke, H. J. ..... '86. 11,365
Coppin, H. ..... '86. 16,605
Correja, H. ..... '84. 17,002
Coster, J. ..... '88. 15,723
Coventry, A. ..... '85. 13,463
Crocker, H. S. ..... '87. 7790
Crooke, W. ..... '88. 15,723
Cross, A. K. ..... '87. 8998
Crossley, E. ..... '86. 8866
Cusworth, C. ..... '87. 4718

Dallas, D. C. ..... '85. 16,078
Dallmeyer, T. R. ..... '87. 5903 8711. 13,844. '88. 1583 5619.
Darwin, L. ..... '88. 14,820
Davies, D. T. ..... '84. 3866
Dawes, A. H. ..... '85. 3766
Deans, J. W. ..... '87. 6780 '88. 11,257
Dearle, S. G. Harrison- ..... '88. 11,300
Decoudun, J. ..... '87. 13,332 '88. 11,578
Delves-Broughton, V. W. ... '87. 16,648
Denis, F. ..... '85. 5999
Derogy, E. E. N. ..... '88. 9327
Dessendier, J. E. ... '86. 14,548
Devis, E. C. J. ..... '88. 14,948

Digitized by Google

Dobler, L. F. ..... '87. 9949
Dollond, A. W. ..... '85. 11,959
'86. 13,620
Dornin, G. W. ..... '88. 18,026
Downing, G. ..... '87. 7121
Driffield, V. C. ..... '86. 6013
'88. 5545
Durnford, C. D. ..... '85. 8938
10,896. 15,747. '86. 2365
2384.

Earp, J. ..... '87. 13,879
Eastman, G.... '84. 13,596. 15,542
'85. 5725. 12,972. '86.
15,661. '87. 3530. '88.
6950.
Edwards, B. J. ..... '84. 8643
'85. 8917. '86. 12,700
„ E. ..... '86. 16,012
'87. 6032
Elliot, J. M. ..... '87. 13,186
Elliott, F. ..... '88. 17,100
„ G. W. ..... '87. 1637
„ J. ..... '88. 17,100
Endean, T. ..... '87. 12,733
Eskell, C. A. ..... '86. 2495

Fabrik Chemischer Produkte Aktiengesellschaft. '85. 14,957
Falk, E. ..... '84. 16,694
Fantini, P. V. ..... '86. 167
Farmer, E. H. ..... '87. 15,727
'88. 524
Fetter, J. F. ..... '86. 11,365
Fichtner, F. A. ..... '88. 18,640
Forquignon, L. ..... '84. 7190
Forrest, T. ..... '86. 1365
Foster, A. M. ..... '88. 11,257
Foxlee, E. W. '86. 5205. 15,727
Froedman, F. H. ..... '86. 10,659
Fuidge, L. V. ..... '84. 14,457
Furnell, T. ..... '84. 7746

Gaedicke, J. ..... '87. 7035
Gale, C. H. ..... '88. 3076
Gallwey, W. H. Payne- ..... '86.
2876
Gardner, H. ..... '84. 9026
Geofroy, L. ..... '86. 2068
Gibbons, G. B. A. ... '87. 15,907
Gibbs, W. C. ..... '88. 18,026
Goodall, A. H. ..... '88. 15,376
Göschl, —. ..... '85. 3134
Goslin, S. B. ..... '84. 8721
Gotz, J. R. '85. 10,594. '87. 2042
3922
Graham, T. P. ..... '88. 15,068
Green, C. ..... '84. 14,457
Griffiths, W. ..... '85. 12,227
Grimston, G. S. ..... '85. 5181
'88. 17,298
Grimston, W. ..... '87. 6353
Groth, L. A. .... '86. 5595. 5596
5654
Guiton, P. J. ..... '88. 18,403
Guttenberg, W. ..... '88. 8508

Haddan, H. J. ..... '84. 15,757
„ R. ..... '88. 1466
Hancock, J. ..... '86. 6316
Harcourt, A. G. V... '87. 11,985
Harmer, J. ..... '88. 5869
Harrison-Dearle, S. G. ..... '88.
11,300
Hart, A. ..... '88. 5055
„ F. W. ..... '84. 8. 1814
'88. 356
Harvey, T. W. ..... '88. 9283
Hayes, H. E. ..... '84. 5509
Hazeldine, F... '84. 712. '86. 912
3325
Heath, W. ..... '84. 7792
Henderson, A. L. ..... '85. 424
„ A. M. ..... '88. 5462
Herbert, H. ..... '88. 18,357
Himly, E... '84. 11,556. '85. 5523
Hines, J. ..... '88. 5140
Hinks, J. ..... '88. 17,656
Hinton, E. ..... '88. 9501
Holroyde, J. B. ..... '85. 8313
Holliday, S. J. ..... '88. 5536
Honey, W. G. ..... '84. 14,335
15,202
Hopkins, A. G. ..... '84. 3026
„ J. ..... '84. 3026
Hösch, J. C. ..... '86. 10,483
Houssard, L. ..... '88. 12,474
Howell, A. ..... '88. 5140
„ E. ..... '88. 5140
Howman, A. F. ..... '84. 4906
Hulbert, O. L. ..... '85. 11,446
Hunter, J. J... '84. 1898. 16,087
'87. 4808
Hurter, F. ..... '88. 5545
Husnik, J. ..... '87. 37

Iago, C. T. ..... '84. 13,640
Inkpen, G. C. ..... '88. 14,801

James, A. ..... '88. 2730
„ T. ..... '84. 3865
Jefferies, J. H. ..... '87. 13,505
Johnson, J. H. ..... '85. 4191
„ W. D. ..... '87. 6459
Joltrain, C. Z. ..... '85. 4191
Journoud, J. B. J. ..... '86. 5793

Kayser, H. ..... '84. 5353
Kellar, A. ..... '86. 14,099
Kendall, T. W. ..... '84. 7678
Kennerell, J. ..... '87. 10,844
Kerr, T. ..... '88. 7942
Kerry, W. H. R. ..... '88. 14,652
Kershaw, J. ..... '85. 5014
Kidd, R. L... '85. 9286. '86. 3269
Kingdon, Z. H. ..... '86. 15,873
Klary, C. ..... '86. 13,380
Klic, K. ..... '87. 7980
Knight, E. M... '86. 8654. 10,783
„ G. H... '86. 8654. 10,783
Konrad, F. ..... '85. 1232
Koppe & Moh ..... '87. 6032
Krebs, O. ..... '88. 7556
Krügener, R. ..... '88. 1510
Kühn, H. ..... '87. 9159
Kunkler, E. ..... '84. 2312. 9612

Lake, H. H... '85. 3134. '86. 9413
9756
„ W. R. ..... '84. 5686
Lamb, A. C. ..... '84. 1622
Lancaster & Son, J. ... '86. 3879
Lancaster, W. J. ..... '85. 5363
5364. 5677. 8971. '86. 3879
9522. 12,571. '87. 1533.
Landon, C. E. ..... '86. 6588
Lauder, J. ..... '87. 3270
Laval, C. G. P. de.... '84. 12,562
Lawless, D. ..... '86. 358
Laws, R. W. ..... '88. 10,368
Lee, D. T. ..... '86. 15,697
Leisk, J. ..... '86. 12,755
Le Moussu, B. C. ..... '85. 6359
Le Prince, L. A. A..... '88. 423
Letalle, A. E. ..... '88. 8518
Lloyd, E. ..... '85. 6204
Lovegrove, J. ..... '88. 9501
Lowdon, G. ..... '85. 4102
'86. 7121. '88. 5666
Lucas, H. ..... '86. 2039
Lyne, E. H. B. ..... '87. 11,454
Lyon, J. ..... '88. 16,224
Lysaght, G. J. ..... '88. 7476

McDonald, A. ..... '84. 7678
Macdonald, J. A. ..... '84. 3866
Macdougald, G. D. ..... '84. 416
McEwen, C. J. ..... '87. 15,907
McKellen, J. D. ..... '88. 15,454
„ S. D... '84. 319. 6688
8463. 16,334. '85. 8722.
'86. 899. 913. 7951. '88.
7432. 15,454.
McLaughlin, G. ..... '86. 9756
Mader, H. ..... '88. 8193
Mainwaring, W. F. B. Massey-
'86. 2068
Marlow, E. ..... '85. 4378
Marriott, A. ..... '87. 12,292
Marsden, S. ..... '86. 9970
Martin, G. S. ..... '87. 5923
Massey-Mainwaring, W. F. B.
'86. 2068

Digitized by Google

Matthie, W. A. C.....'85. 2888
Mavitta, W. ....'88. 9518
Mayall, J. J. E....'87. 5080
Mayfield, J. T. ....'86. 14,410
Methven, J. ....'88. 6923
Mewburn, J. C....'85. 5052
Middlemiss, W. ....'84. 15,887
'86. 5450
Miethe, A. ....'87. 7035
Mills, B. J. B. ....'85. 5999
„ J. L....'88. 9244
Miron, A. S. J. ....'85. 5909
Mitton, J. ....'87. 1830
Moëssard, P. ....'84. 9461
Moh, Koppe &....'87. 6032
Mold, G. ....'85. 15,162
Moore, A. E. ....'86. 8190
„ F. C....'86. 1432
Morgan, G. W. ....'84. 8566
„ W. T. ....'85. 9286
'86. 3269
Moss, W. E. ....'87. 1830
Muir, S. J....'86. 167

Nash, S. C....'85. 4288
Newman, A. S. ....'86. 7155
7156. 8329. '87. 12,191
Nicholson, A....'85. 12,425
Norris, R. ....'88. 7044
North, C. G....'88. 18,542
Norton, T. ....'88. 10,860
Notz, J. F. ....'85. 1232
Nowlan, F....'88. 4248

Oertel, F....'88. 8193
Oldham, W....'88. 16,537
O'Reilly, W. .... '88. 10,823
„ W. P. ....'86. 15,187
Ostrorog, Count S. J. d'. ....'84.
10,558

Palmer, E. J.....'85. 3185
Palmer, E. J....'86. 4965
Park, H. ....'85. 11,386
'86. 14,262
Parker, J....'86. 15,697
Parkes, E. W....'86. 14,120
Parsy, L. ....'88. 18,150
Pass, E. de....'85. 5909
Passingham, E. J....'88. 3352
Payne-Gallwey, W. H. ....'86.
2876
Pead, W. ....'88. 8739. 17,198
Pearsall, W. B. ....'88. 11,360
Perken, Son, & Rayment....'88.
17,198. 18,542
Perken, E....'88. 17,198. 18,542
„ E. T....'87. 2382
„ F. L. '88. 17,198. 18,542
Perry, E. W. ....'88. 405
Philippi, L. H....'84. 13,103
Phillips, A....'86. 9788
„ S. ....'88. 4823
Phipps, E. ....'88. 2382
Pickard, E. E....'85. 9288
Pirard, A. ....'84. 3232
Place, J....'88. 3259
Preece, W. H....'84. 6312
Prescott, T....'87. 7464
Pumphrey, A. ....'85. 976
„ C....'86. 5636

Raboisson, L' Abbé. ....'84. 5686
Ramsden, J. W....'88. 3196
13,868
Rawlinson, W....'85. 12,870
Rayment, Perken, Son &....'88.
17,198. 18,542
Rayment, A. ....'86. 1675. 2423
'88. 12,181. 17,198. 18,542
Raymond, C. ....'87. 1079
Reddie, A. W. L. ....'85. 8748
Redding, H. J. ....'84. 6898
'88. 17,328
Reed, A. H....'84. 10,950
'88. 4692
Riedel, E. H. ....'88. 4692
Riley, W. J....'86. 11,175
Robertson, D....'85. 6368
„ J....'85. 6368
Robinson, A. ....'85. 15,376
„ J. V. ....'84. 11,212
Rohrbach, C. E. M. ....'86. 4375
Rouch, S. W. ....'85. 5938
'87. 6613. '88. 4145
Rouse, J. H. ....'87. 4270
Roussel, T. C....'88. 12,915
Roux, L. de. ....'84. 5134
Ryder, H....'88. 12,307
„ W. H. ....'88. 12,307
Rydill, G. ....'84. 1251

Sack, H. ....'84. 15,757
Salomons, Sir D. L. ....'88. 3615
Samuels, T. '84. 7201. '86. 9645
Sands, C. ....'84. 1898. '87. 4808
„ H. C....'84. 16,087
Sarjeant, W. L....'85. 4531
'86. 4624
Saunders, J. W....'84. 3866
Sawyer, J. R. ....'84. 14,885
Schenkenhofer, J. ....'84. 16,979
Schirm, J. W. C. C. ....'88. 1026
Schröder, H. L. H. ....'88. 5194
Scorer, W....'88. 12,573
Scott, T. ....'84. 12,389
Sengel, E. A....'87. 9949
Sergeant, H. C. ....'85. 8748
Sershall, G. J. '86. 9155. 16,356
'87. 2012
Sharp, A. P. ....'85. 3581
„ H. B. ....'84. 3510
Shawcross, H. J....'84. 8771
'87. 10,814
Shew, F. ....'84. 12,772
Shirtcliff, W. J. ....'85. 15,629
Sichel, A.....'87. 3139
Smith, C. R.....'84. 10,950
Smith, G. P....'84. 14,156
Stanbury, C. H. ....'85. 14,239
'88. 1291
Stanford, E. C. C. ....'84. 13,433
Stanley, W. F. ....'85. 4528
'86. 2811. 4624
Stephan, A....'88. 4823
Stirn, C. P.....'86. 9655
Storey, J. ....'85. 491
Stuart, J....'88. 5194
Sturrock, J. ....'84. 4989. 10,334
Sutherland, G.....'84. 9026
Sutton, H. ....'87. 15,722
Swift, J. ....'86. 12,250
Swinden, E. V. ....'87. 13,879

Tayleure, M....'88. 6992
Taylor, F. ....'88. 3782
„ H. D....'85. 3755
„ J. ....'88. 4149
„ J. H. ....'88. 18,796
Teed, H. W. ....'88. 6583
Thomas, A....'84. 3771
Thompson, T. H. ....'88. 5770
„ W. P. ....'88. 1026
7176
Thomson, J....'84. 5647. 13,318
'85. 1072
Thornton, J. E....'86. 2670
12,238. 13,240. 14,421. '87.
16,018.
Thorp, T. ....'84. 9931
Thwaite, B. H. ....'86. 3061
Tiquet, F.....'88. 14,593
Todd, I. ....'84. 16,727
Todman, J. T....'86. 14,410
Tomlinson, C....'88. 15,901
Tompkins, H. K. ....'87. 15,727
Tourtin, E. ....'88. 18,150
Towers, A. ....'88. 16,827
Townshend, E. ....'88. 5770
Trenemen, W....'85. 10,808
'87. 4915
Trotter, A. F....'84. 6312
Tulley, J. S....'88. 18,562
Turner, J. W....'88. 8447
Tylar, W....'86. 5181. '87. 9402
12,275. '88. 9711

Underwood, E. ....'85. 5965
„ T. A....'85. 5965
Unge, W. T. ....'87. 4710
Urie, J....'85. 1406. '86. 10,770
16,327

Vergara, F....'85. 9575
„ F. J....'86. 2390

Digitized by Google

Vœing, O. .....'85. 14,867
Vogel, H. W...'86. 7963. 15,532

Wain's Maskin & Skibsbyggeri, Burmeister &.....'84. 11,907
Walery.....'84. 10,558
Walker, W. H.....'84. 13,596 15,542. '85. 5725
Warner, W. H. .....'88. 10,864 10,865
Warnerke, L.....'85. 2699 '87. 2662
Watson, T. P.....'86. 7359 '87. 9948. '88. 907. 18,099
Watson, W.....'88. 14,696
Watts, A. J.....'88. 11,360
„ W.....'84. 12,855
Wells, C. .....'85. 6973. 7422
West, B. C.....'86. 9413
„ *R. B*.....'86. 9413
Westbrook, C. S.....'85. 2181
Wetter, J. .....'84. 7190
Weyde, H. van der.....'84. 114
Whitfield, G. C.....'88. 1985
Wild, P. F. .....'88. 171
Wild-Wirth, H. .....'88. 171
Williams, E. S. .....'88. 4874
„ J. D. .....'86. 4179
Willis, W.....'87. 1681. 16,003
Wilson, J. .....'86. 6588
„ W. J.....'88. 5755
„ W. V. .....'85. 491
Wirth, H. Wild- .....'88. 171
Wise, W. L.....'85. 1232
Wolff, L.....'87. 5772
Wood, J. .....'88. 15,024
Woodbury, W. B. .....'84. 2981 '85. 9575
Wollaston, C. J.....'85. 2759
Worsnop, J. M. D....'84. 13,774

Zerr, E.....'88. 16,677

Digitized by Google

PHOTOGRAPHY.

Patents have been granted in all cases, unless otherwise stated. Drawings accompany the Specification where the abridgment is illustrated and also where the words *Drawings to Specification* follow the date.

A.D. 1884.

8. Hart, F. W. Jan. 1.

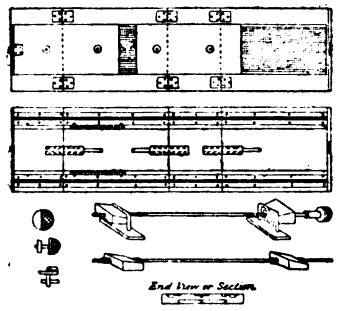

Cameras.—A long base-board is used to give a great range of focus, and is hinged so as to fold round the camera. Triangular bolts lock the hinges when the base is folded out. Short lengths of rack for focussing are moved to the proper position on the base-board. The body is clamped to the base-board by wedges which are screwed by transverse rods, under stirrups attached to pieces sliding in the guide grooves. Screws with folding disc heads are used for fixing the movable front for convenience in packing.

114. Weyde, H. van der. Jan. 1.

Vignetting.—The graduated tone round vignettes is produced in the negative by interposing screens either outside the camera between the sitter and the lens or inside the camera between the lens and the negative. Translucent screens with an aperture in the centre are used inside the camera. Translucent or opaque screens are used outside. Reflecting screens may be used.

319. McKellen, S. D. Jan. 2.

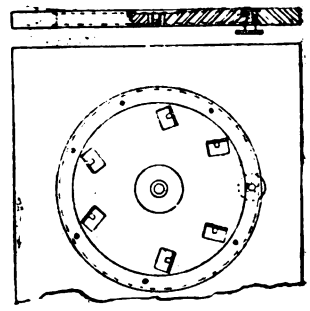

Cameras. — This invention is intended to dispense with the loose tripod head to which camera legs are ordinarily attached. The tripod head or turntable is inserted in a recess in the base-board. The legs are connected with it by means of the usual pins. The turntable is held in its place by rings, one on each side, which are drawn together by set-screws to bind the turntable.

416. Macdougald, G. D. Jan. 2. *Amended.*

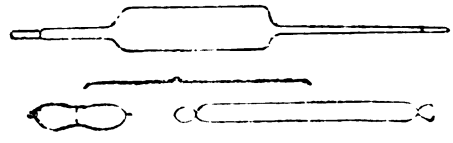

Developing; chemicals, storing and applying.—Measured quantities of chemicals required to form photographic developing or other solutions are sealed up in glass tubes drawn out fine at the ends, which are to be broken off on mixing. Receptacles of soluble substances such as gelatine, gum, &c. may be used. Solid chemicals may be contained in paper cylinders with self-closing slits. Or the different chemicals may be taken up by bibulous substances, which are then dried.

P 10398—1000—6/94 Wt 5973 D & S

Digitized by Google

712. Hazeldine, F. Jan. 4.

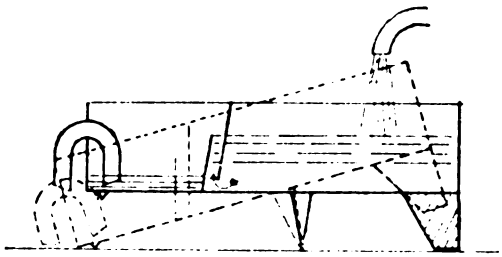

Washing prints. A trough is divided into compartments of which the first or washing compartment receives a constant supply of water, which flows into the other compartment, whence it is discharged by a siphon or valve when the trough tilts over on a fulcrum.

1251. Rydill, G. Jan. 11.

Colouring.—In order to produce coloured transparent photographs, an exact copy of a transparent photograph on glass is photographed on stone or etched on zinc and transferred to stone. A print is taken from this in one or more colours on to transfer paper, and sized. The print is then damped and applied to the back of the glass photograph; on removing the paper the colours remain over the transparent photograph. After varnishing, another sheet of glass may be applied. Modified methods of applying the coloured print may be employed.

1622. Lamb, A. C. Jan. 17.

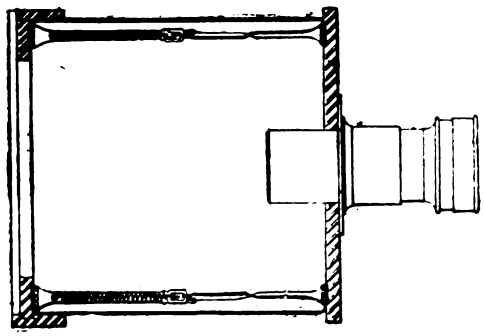

Cameras.—To enable a camera to be carried conveniently in the pocket, the front and back frames are connected by "springs or spring bars." In the arrangement described in detail in the Specification, the springs or bars are similar to those used in collapsable opera hats, one jointed stay being fitted at each corner. Each stay has a joint in the middle and is held in the distended position by a spiral spring.

1814. Hart, F. W. Jan. 21.

Tripod and like stands.—Each leg consists of three rods, two forming the upper portion, attached to the stand head by socketed pins, while the third slides freely between the other two and forms the lower portion. The upper rods D, D are fitted with straps B, B hinged to a sleeve A in which the central rod C slides. The upper rods are slightly bevelled off where they embrace the central one, and are pressed to it by the act of fitting them to the stand head. Further grip is obtained by the strap E F, while if very heavy weights are to be sustained a ratchet face clamp M N R is used.

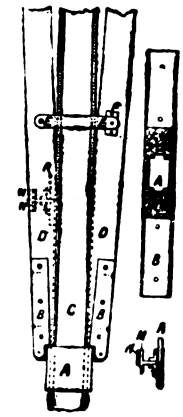

1898. Sands, C., and **Hunter, J. J.** Jan. 22.

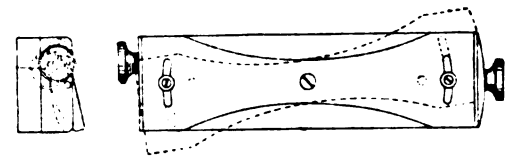

Cameras. — The object is to render cameras adjustable in a superior manner, and to afford increased facilities for working the same. The camera is placed either horizontally or vertically upon a cradle-action attached to a base-board. The cradle is constructed of two or more slips of wood or metal, the one being slightly rounded underneath. The slips of wood or metal are made to move in separate directions by a double-headed rack and pinion.

2312. Brookes, A. G., [*Kunkler, E.* and *Brunner, J.*]. Jan. 29.

Photo-mechanical printing.—Hatchings or grounds for use in preparing such surfaces are obtained by treating a film or layer of bichromatized gelatine or similar substance. This layer is formed upon a glass plate, and dried at a particular temperature, depending upon the degree of fineness desired in the result. It is then exposed to light, and after washing and drying in the usual way is inked and varnished. Negative or positive plates containing the picture associated with a ground or hatching are produced in the following way. An impression of a hatched plate, such as that above described, is first obtained photographically upon a sensitized layer. This impression is developed in the ordinary way, and the developed surface resensitized. The associated sensitized layer and

Digitized by Google

ground is then used to obtain a photographic impression of the picture by ordinary photographic means, and from this the impression is taken upon a surface prepared for photo-etching.

2767. Branson, F. W. Feb. 5.

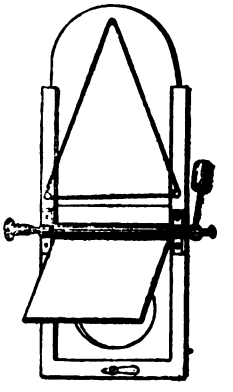

Shutters. — Relates to the invention described in Specification No. 1650, A.D. 1883. The exposure commences by raising a flap, and finishes by the descent of a slide pulled down by an india-rubber spring. There is a lever on the end of the spindle which carries the flap, on which an adjustable weight is fixed to give different velocities to the flap. Or the weight may be thrown to the opposite side to keep the flap closed till it has been opened by hand. Instead of the weight being fixed to a lever, it may be attached to a weight passing over a pulley. As soon as the flap is raised to the full height, the sliding shutter is liberated and is pulled down.

2981. Woodbury, W. B. Feb. 8.

Photo-mechanical printing. — The continuous half-tone of negatives and positives is broken up by transferring thereon a carbon transparency obtained by aid of photographs taken from wire gauze, lines, or dots, &c., or a photo-lithographic transfer may be used, and if this does not give sufficient density bronze or opaque powder is dusted over the image. The grain may also be produced by dusting over negatives and positives suitable granular powders. By pressing a relief image, obtained by the Woodbury process, from a combination of a positive or negative, and a suitable "resist," upon a sheet of fine cardboard to which fine transfer paper is attached, a reverse relief is obtained. The image is rolled with ink, and when the transfer paper is detached, the design may be transferred to zinc for etching, or to stone for lithographing.

3026. Hopkins, J., and **Hopkins, A. G.** Feb. 9.

Dark slides; cameras. — A light-tight box or slide to receive the sensitive plate in a carrier, which runs in grooves in the slide, is fixed over an opening in the camera back. Exposure of the plate is made by simply removing the small screw on the top of the slide, and inserting a rod with screw at the end to take into the plate carrier, by which means the plate is let down or drawn up at the will of the operator. The camera back is made with a door, so that the focussing-screen can be inserted or taken out without interfering

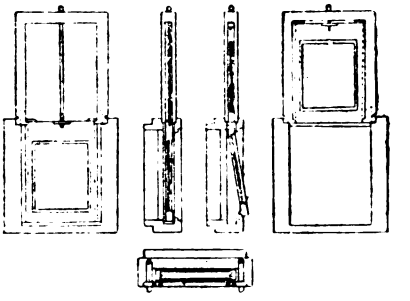

with the plate slide when attached to the camera back.

3232. Pirard, A. Feb. 13.

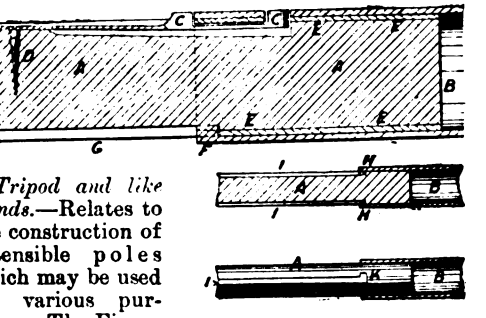

Tripod and like stands. — Relates to the construction of extensible poles which may be used for various purposes. The Figure shows the application to the handle of a spade, but the invention can be applied to tripod stands &c. The lower part A of the handle is of wood, and slides in the hollow iron part B. The wood carries one or more catches C fixed by the screw D, which can be pushed back into a recess, so as not to interfere with the sliding. There is a ferrule or ring E, E on the end of the wood, and a slot G along it for the projection F on the iron part to work in and guide the one part on the other. In a simpler form of handle, a slot or slots I run along the wood, and projections H on the iron work in them. One or more short slots K at right-angles are provided, so that a slight rotation of the handle can make all firm in any convenient position. The slots may also be made very short and turned towards the end of the handle away from the spade, so that the iron part can easily be detached. In a further modification, the projections are fixed to the wood, and the slots formed in the iron.

3510. Sharp, H. B. Feb. 18.

Tripod and like stands, portable legs, standards, &c. for. A long strip of metal is formed into a

Digitized by Google

spring A coiled like the spring of a clock. To the inside of this is fixed a core B for attachment to the frame of a music stand, or whatever the legs or standards are to support. The spring is then drawn out, and twisted until it becomes a tapering rigid rod, when the socket C is fitted over the other end to hold it from unwinding. The socket may be supplied with a spike for sticking into the ground.

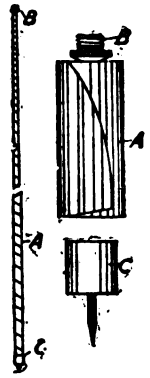

3771. Thomas, A. Feb. 22.

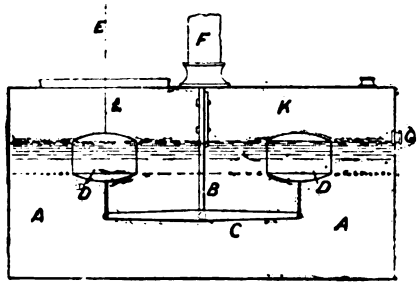

Photometers.—A tank A is divided down the middle by a partition B, which does not reach to the bottom. On the bottom of this partition is pivoted a lever C, to the ends of arms of which the floats D, D are attached by chains. One float is free, and the other has a cord E fastened to it, by which it is connected with a pointer on a dial supported by the standard F. Through the standard a pipe passes, opening at one end into the chamber K, and terminating at the other in a gas jet. The upper portion of the standard F is threaded, and a nut carrying a wire gauge can be screwed along it, so as to measure a standard height of flame. Water is first introduced into the tank through the tap G until the floats are nearly submerged; gas is then allowed to enter, and the jet lighted. The pressure causes the float in K to fall and in L to rise, and the pointer is carried over the dial by a counterpoise. The pressure is raised until the flame burns the standard height, and the pointer then indicates on the dial the richness of the gas.

3865. James, T. Feb. 25.

Photo-mechanical printing.—Relates to a method of obtaining typographic impressions from photo-reliefs. A cast of the relief is taken in elastic material, and the impressions are obtained from the elastic printing-block thus produced. Gradations of tone are obtained by varying the pressure of the inking-roller when inking the block. The raised and recessed parts of the block may be supplied with various different shades of colour by similarly regulating the pressure of the rollers when applying the various colours.

3866. Saunders, J. W., Davies, D. T., and Macdonald, J. A. Feb. 25.

Head-rests.—Consists of an adjustable head-rest for photographers' chairs &c. Guide-holes C are attached to suitable supports at the back of the chair, and in these works an adjustable rod A of rectangular section carrying a head-rest. The rod is secured by a pin D which fits in one of a series of holes E in the rod. The pin is fixed to the end of a spring F, and is attached to a thumb-plate G by which it may be released for adjusting the height of the head-rest.

3881. Barry, J. H. Feb. 25.

Photometers.—Relates to registering-apparatus in connection with photometers, magnetic compasses, &c. The Figure shows the application to a mariners' compass. From the card A is hung a pair of insulated parallel bars B, which carry at their ends pendants of platinum C. At every quarter-point of the compass is fixed a spur-shaped contact-piece D, connected with the poles of a battery E. A cylindrical drum, rotated by clockwork, carries the paper on which the register is kept, the paper being ruled in divisions parallel to the ends of the drum, and marked with the points of the compass. A screw, terminating in a ratchet-wheel, the pawl of which is actuated by an electromagnet, carries the marking-pencil. As long as the ship's head remains in one direction the pencil is stationary, and the line traced keeps to its division. When the ship's head is turned, the pendants sweep over the contact-pieces, making and breaking contact, turn the screw, and cause the pencil to travel parallel to the axis of the drum. The arrangement of the parallel bars and contact-pieces is such that a reverse motion of the ship's head brings the pencil back again. In the application to a photometer, a radiometer is used, every revolution or half-revolution being registered.

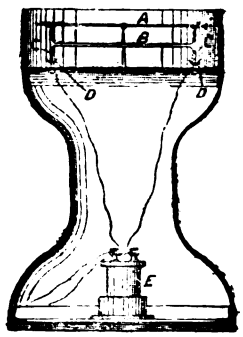

Digitized by Google

4144. Anderson, W. B. Feb. 29.

Colouring.—An unmounted print (toned, fixed, and washed,) is mounted on a plate of opal glass. The plate is heated, and beeswax or other similar substance is applied till the print is rendered transparent; the superfluous wax is rubbed off, and the print polished with a silk handkerchief. Oil colours are then applied.

4594. Brown, J. March 8.

Photo-mechanical printing.—A surface to be etched is sensitized by coating with a mixture of gum and bichromate of potash or ammonia, to which, in certain cases, a little albumen or fine soap is added. A photographic impression of the picture is then obtained on this sensitized surface, and this impression is developed by applying an acid-resisting varnish with a dabber or roller, and by immersion in a bath of alcohol. The plate is now submitted to the action of an etching-agent suitable to the metal of which the plate is made.

4906. Howman, A. F. March 14.

Dark slides.—The slide consists of a rectangular frame, the front cover of which consists of a metallic plate which slides in a suitable groove. On the back is fixed a spring which presses forward the sensitized glass plate, the lower edge being engaged in a groove and the upper edge in the recess of a rabbeted strip. This rabbeted strip is also pressed down on the top of the plate by a spring. Another strip is pressed forward by a spring to close the opening and exclude the light when the cover is withdrawn.

4989. Sturrock, J. March 17.

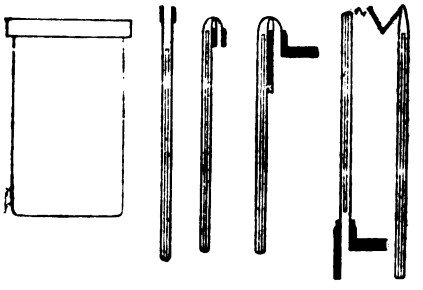

Changing-bags; cameras.—At the back of the camera is a space to hold a sensitized plate, which is open above and provided with a flange or other similar device, to which the open mouth of a bag impervious to light is attached by an elastic band. A sensitized plate is inserted in the bag in a dark place, and the top of the bag is then folded down and clipped to exclude the light. The mouth of the bag is then fitted on the camera and the plate is slipped in. After exposure the plate is replaced in the bag. A number of plates may be stored away in bags.

5134. Roux, L. de. March 19.

Photo-mechanical printing.—A "positive" of the object to be produced is obtained by the ordinary means and placed upon carbon paper, which has been dipped in water containing 4 per cent. of bichromate of potash; this is then exposed, after which the carbon paper is moistened and laid upon a copper plate, to which it is made to adhere by pressing with a roller. It is then placed in boiling water for some time and the paper removed. When the adhering carbon is washed off, there remains an engraving in relief upon the plate. A special alloy is then melted, and the copper plate applied to it with pressure; when cold the plate is removed, and the alloy bears a facsimile of the object, and is used for printing.

5353. Kayser, H. March 24.

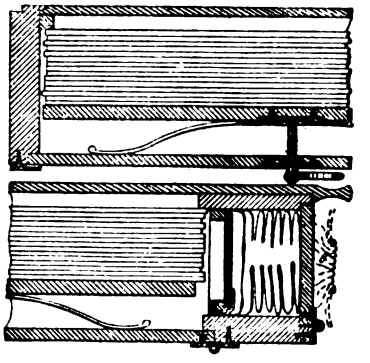

Change-boxes.—The front plate, after being exposed, is withdrawn and placed behind the other plates. To effect this, a sleeve made of fabric impervious to light is fitted over the arm and drawn tight. A suitable spring presses the plates together, and presses them up against the front frame. This spring is pulled back by a ring at the back of the exchange box. The plates are separated by layers of black paper. There are two doors at the end of the box, between which the sleeve, when folded up, is enclosed.

5509. Clark, A. M., [*Hayes, H. E.*]. March 26.

Tripod and like stands for maps and charts. A base-block A is cast upon a central rod B, which is

Digitized by Google

screwed at each end to receive the nuts C and D. The legs F fit into a socket E on the base, and are clamped into place by a wedge-block which is tightened up by the nut C. The upper block H

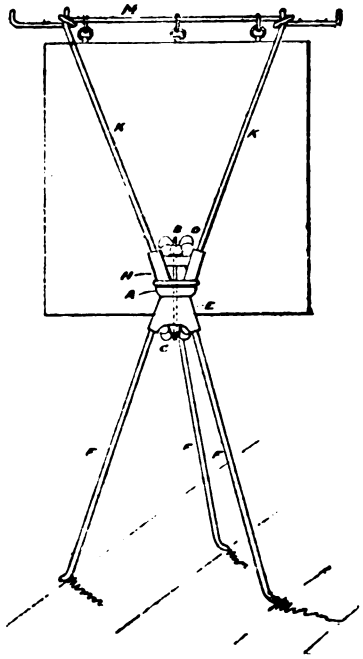

revolves on the central rod and is fitted with two rods K upon which the cross rod M is placed. The chart or map is then hung from rings fitting over hooks on the rod M.

5647. Thomson, J. March 29.

Tripod and like stands.—Additional supports are furnished to the camera by slotted stays A, which connect the corners of the base of the camera to the camera legs. The stays are slotted at one end and clamped in the proper position by screws B. For use at sea the camera is kept horizontal by a pendulum swung on gimbals. The gimbals are placed within the cap of the stand.

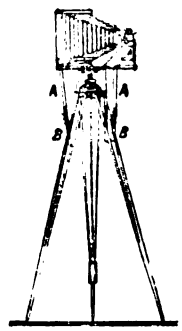

5686. Lake, W. R., [*Raboisson, L'Abbé*] March 29.

Frames for sensitized films.—Relates to an extending frame which can be employed to support the sheet during exposure in the camera, and also during washing, drying, &c. The skeleton of the frame is composed of flexible metal joined by a bulged metal cross-piece A, by which the frame is expanded, the expansion taking place by separation at the corners, which are connected by pins or tongue pieces B. Points are fixed to the edge of the frame to hold the paper, and clamping-pieces are hinged to the back. The bulged cross-pieces are

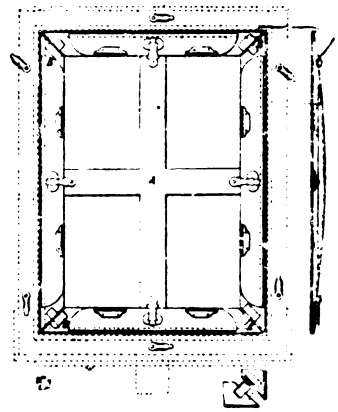

pressed inwards towards the paper, in order to expand the frame, by the door of the dark slide or by the cover of the wooden frame surrounding the stretcher.

6312. Preece, W. H., and **Trotter, A. P.** April 12.

Photometers.—The rest A for the lamp slides along the rod B, and has the bar C attached to it by a hinge. The bar C is pulled against the cam D by the spring E, and can be moved by the piece F on the screw G. The cam D is so shaped that the distances measured along G correspond to the inverse squares of distances measured along B. Equal graduations on the wheel H thus enable the power of a light to be read off at once. Instead of a fixed cam-plate the bar A C might be appropriately shaped. Mirrors are placed at K, K for facilitating the inspection of the screen L on both sides.

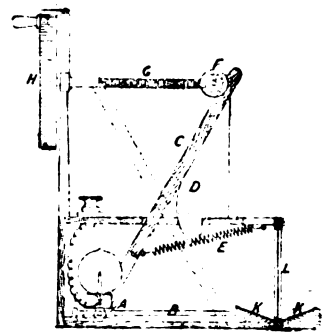

6688. McKellen, S. D. April 23.

Cameras.—The front board of the camera which carries the lens is retained at any angle or folded down on the base-board to enable the camera to be folded up. The invention may be applied to any ordinary camera. The front board A is suspended between a pair of uprights B, B and oscillates like a toilet glass between its standards. The standards are hinged to the slide of the base-board at C, to enable it to fold upon or within it. D, D

Digitized by Google

are slotted stays, one on each side, clamped by the same screws as the standards. When the front

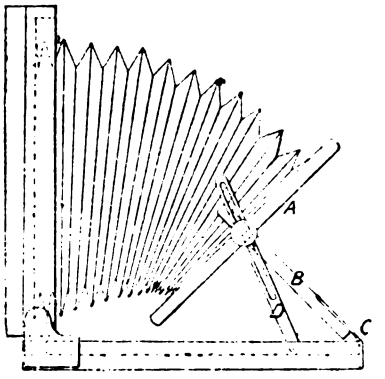

board has been folded down the camera then folds up like a book.

6898. Redding, H. J. April 28.

Lamps, dark-room. The shape of the frame is triangular or prismatic, and is made up of three rectangular sides hinged at three corners and in the middle of the back side. The back folds inside the other two when the frame is folded up. The triangular caps A and B fit on the ends. The top cap A contains a hole for the escape of the hot air, which is covered by a metallic disc, supported on three radiating branches riveted to the top. On the bottom cap B is a tray covering a hole for the admission of air, which also serves to support the light. The body of the lantern is surrounded by ruby cloth.

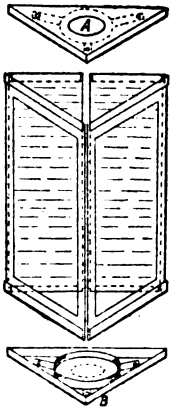

7190. Wetter, J., [*Forquignon, L.*]. May 3.

Colouring prints. The colours are applied to the underside of the sheet, which is afterwards made transparent. The paper should be sufficiently sized to prevent it from blotting. Photographic copies obtained with salts of platinum are preferable to copies obtained with salts of silver. Before applying the colour the sheet is placed against a window or upon a glass desk. After the sheet has been coloured it is rendered permanently transparent by dipping it into a bath of white wax melted or dissolved in spirit of turpentine. The excess of liquid is allowed to drop off, and the sheet is placed between sheets of blotting-paper. The thin sheet may then be drawn on cardboard, satined, and enamelled like an ordinary photograph.

7201. Samuels, T. May 3.

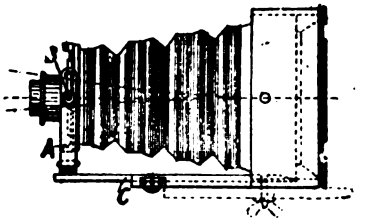

Cameras.—The object is to dispense with swing backs and sliding fronts. The lens is supported so that it can be turned both on a vertical and a horizontal axis, and is capable of receiving a lateral and a vertical adjustment. The support consists of a U-shaped bracket A, the sides of which are slotted to take the horizontal axis of the gimbal ring B. The horizontal part of the bracket is also slotted to allow for lateral adjustment. The front board which carries the lens is connected to the U bracket by a ring with horizontal and vertical studs or axes. The U bracket is clamped to a focussing-slide C. For convenience of transport the focussing rack motion is made detachable. To adapt the arrangement to an ordinary camera the lens is connected by a sleeve to the front.

7678. McDonald, A., and **Kendall, T. W.** May 14.

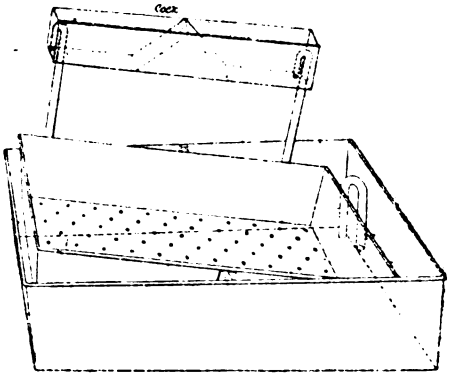

Washing unmounted photographs and the like. The apparatus consists of an oscillating trough, with a perforated bottom, in which the photographs are placed. This vessel oscillates about an axis in another larger vessel, and is reciprocated intermittently by the flow of water into a vessel attached to it above; this upper vessel is divided into two compartments by a doubly-inclined wedge; each compartment has at its end a siphon to empty it when it is tipped down. The water filling these compartments intermittently produces the required oscillatory motion of the vessel containing the photographs. The main vessel has a siphon to empty it as soon as the level of the water reaches a certain height.

Digitized by Google

7746. Furnell, T. May 15.

Shutters, instantaneous. Two flap shutters revolve on axes above and below the opening of the lens. The shutters may be made of thin japanned iron. In making the exposure the top flap uncovers the lens, and the bottom flap comes round to re-cover it. The two axes are joined by a connecting-rod. On the top plate is a disc with two notches; a double pawl actuated by an air piston holds the shutter in two positions, shut and open. The shutters are actuated by an india-rubber band. There is a brake with adjustable pressure on the lower axis; the brake disc is eccentric, so that the resistance gradually falls off. The connecting-rod and cranks are arranged to regulate the velocity of the shutters at different parts of their movement.

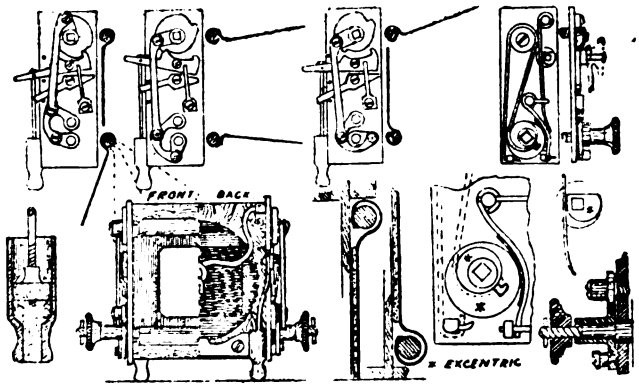

7792. Heath, W. May 16.

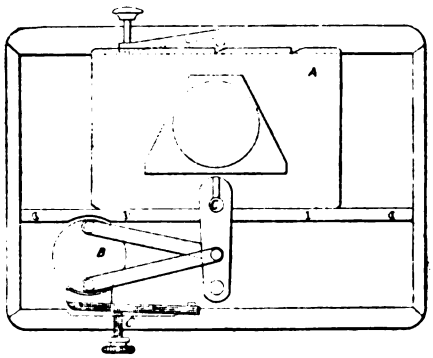

Shutters.—Two slides at A move in opposite directions in front of the lens. Each has an opening, broader at the base, to give a longer exposure to the foreground. To obtain the necessary motion of the slides they are connected to opposite sides of a disc or end of the spring-box B, which produces the actuating force. The slides are enclosed in a suitable wooden box, which is attached to the lens by a short sliding tube. A brake C presses on the spring-box to regulate the time of exposure.

8463. McKellen, S. D. May 31.

Cameras.—To facilitate the focussing of lenses of different focal lengths, the base-board A is made with two parallel rails B, B. Between the rails is adjusted a sliding frame C, to which is attached one or more toothed racks D. The pinions E, E are placed one at each end of the base-board. The front is fixed to the sliding frame and the back to the base-board.

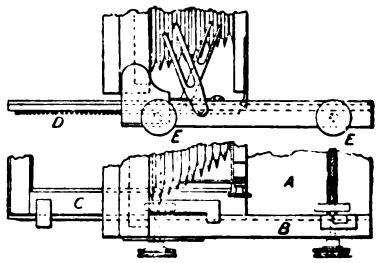

8566. Morgan, G. W. June 4.

Backgrounds.—These are on rollers mounted to turn in end discs B which are operated, to bring any desired background to the front, by bevel-wheels D, D¹ from a handle at the bottom of a vertical hollow spindle E. To lower the screen a rope-driven pulley F, provided with a squared centre stud, is coupled with the squared socket *a* of the roller A, brought to the front, by a lever operated by a rod H passing through the hollow spindle E. The rope F¹ is passed also round a pulley on the standard. The standards are mounted on castors.

FIG. 3.

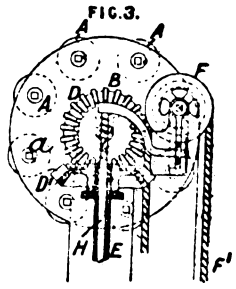

Digitized by Google

8643. Edwards, E. J. June 5.

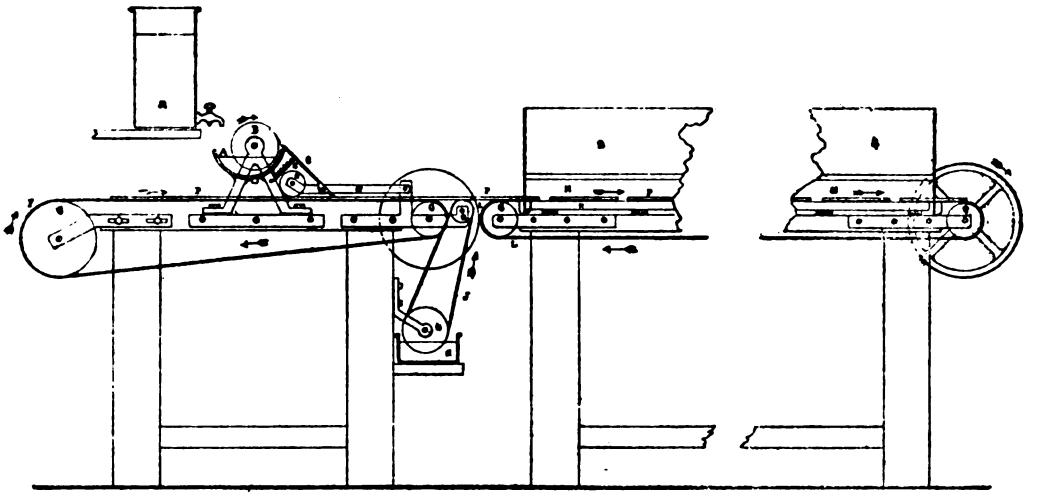

Sensitized plates and films.—Relates to coating photographic plates or paper with gelatine emulsion. The emulsion is run into a trough A containing a metal roller B, which revolves in the emulsion. One end of a scraper C rests against this roller and takes off the emulsion, which it delivers on to the plates P. The plates are carried forward by an endless band F, and delivered to a second endless band L which passes through a chamber M cooled by ice. This second band travels at a greater speed than the first so as to separate the plates. Below the plates is another endless band J which washes the plates.

8721. Atwood, W. S., and **Goslin, S. B.** June 7.

Dark slides; cameras.—The dark slide receives two sensitive plates A, A, back to back. The frame which receives the plates is enclosed in a sheath B which surrounds it on all sides and is open only at the bottom. When the plates are to be exposed it is withdrawn over the top. A button C is provided at the top for lifting the sheath, which also, by turning it round, serves to fix the sheath to the frame. A shutter-like door is closed over the focussing-glass when it is not in use, to prevent the light from getting at the back plate. The focussing-glass is pressed forward to its position by springs.

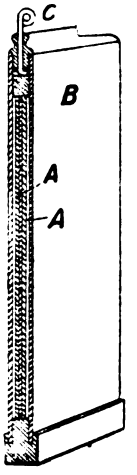

8771. Shawcross, H. J. June 10.

Copying documents, drawings, &c.—The sensitive paper is prepared by covering it with two chemicals. The surface of the paper is covered with a solution of one of the chemicals which is sensitive to light, and the other chemical (which acts as the developer) is rubbed or pressed on the surface in the form of powder. For the sensitive solution a mixture of perchloride of iron with ferric salt, tartaric or citric acid, gelatine, gum, sugar, or other carbohydrate is used; chloride of sodium or like salt is not absolutely necessary, but is beneficial. For developing, powdered gallic or tannic acid is used, or a substance containing these, such as catechu, or powdered sulphocyanides may be employed. Water or alcohol may be used as the developing-solvent.

8852. Branson, F. W. June 11.

Shutters.—A hinged lid or cap covering the mouth of the lens is opened by turning the axis E. The motion is communicated to the axis E by the piston F through the crank C. The piston is moved forward by the pressure of air in an india-rubber bag D. The pressure is communicated through an india-rubber tube by squeezing a flexible ball. The cylinder A oscillates on the pivot B.

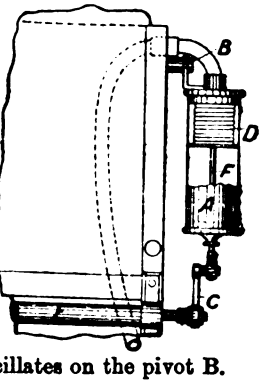

Digitized by Google

9026. Gardner, H., [*Sutherland, G.*]. June 16.

Photo-mechanical printing.—A cast of a photo-relief is obtained, and upon this is attached a sheet of tin foil or similar material which has had a uniform "ground" indented upon it, by pressure from a suitably-engraved surface. This sheet is made to adhere close to the relief surface by the use of an adhesive substance, the raised protuberances or lines constituting the indented ground being outwards. These protuberances are then flattened upon the raised parts of the relief by a light rubbing pressure, and a cast in metal is taken for printing from.

9461. Clark, A. M., [*Moëssard, P.*]. June 26.

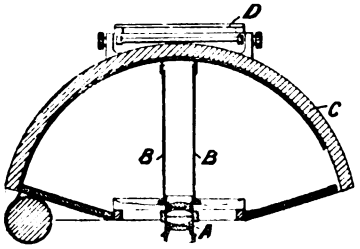

Cameras; lens fittings.—The object is to produce a photographic image of a panorama landscape comprised within a wide angle. The camera is semi-cylindrical and the lens A can turn on a vertical axis about its optical centre. The film is bent to a curvature corresponding to that of the back. The front consists of a rectangular frame filled by an opaque screen of flexible material attached to the lens mount. The vertical axis is pivoted in bearings in the top and bottom bars. The lens can be adjusted horizontally with reference to the axis by screws. There are blackened side screens B, B inside the camera for limiting the field of the lens. The semicircular back consists of a rectangular frame of flexible material such as celluloid, upon which is stretched an opaque caoutchouc-treated fabric. A flexible shutter passes in front of the sensitive film. To facilitate transport the dark back may be in two parts. A small compass with moving graduated limb is placed on a projection of the camera bottom to regulate the position of the camera; a level D is similarly placed on the other side of the centre. The whole of the film is progressively impressed with the image of the whole landscape.

9612. Brookes, A. G., [*Kaukler, E.*, and *Brunner, J.*]. July 1.

Photo-mechanical printing.—Relates to a method of preparing existing negatives or pictures on plates or films for use in obtaining printing or etched surfaces. A sensitive film or layer, on which a hatching or ground has been produced by the method described in Specification No. 2312, A.D. 1884, is applied to the film or plate having the picture upon it, to give to it the necessary ground. Plates or films which have been varnished must first have the varnish removed by treatment with potash or other suitable substance.

9931. Thorp, T. July 9.

Photometers, registering. A governor valve, preferably a diaphragm governor with a loose valve resting on the central portion, ensures a constant flow of gas to the jet-burner A. In the opaque screen B is an aperture, in which is fixed a lens C. This lens throws an image of the gas jet through a narrow slit in the outer drum D, upon sensitized paper carried by an inner drum E. Clockwork F slowly rotates the drum E, and thus a continuous record of the height of the jet is kept, by which the illuminating power of the gas can be estimated. Instead of a drum and sensitized paper, dry plates, drawn forward by clockwork, may be used.

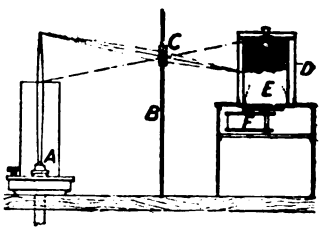

10,334. Sturrock, J. July 19.

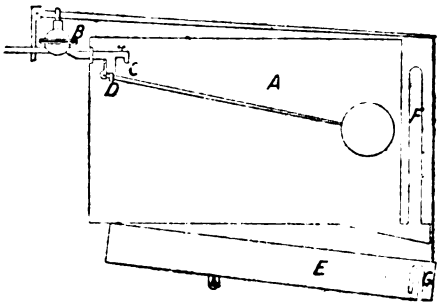

Washing.—The object is to wash prints or negatives with a limited supply of water. A tank A is filled quickly to a height sufficient to cover the material to be washed and allowed to remain at the same level for a definite period. The tank is fitted with trays. The trays are like sieves and are divided up into compartments to suit the size of the negatives or prints. The water supply pipe has two water ways C and D, the larger opening D being controlled by a float, while the smaller C is free; or the float valve may be leaky. The water overflows into a balanced bucket E, which pulls a flexible siphon F down below the level of the water in the tank, thus starting the siphon. As the discharge flows through the balanced bucket, it keeps it down till it is empty. The bucket is connected by levers with the supply valve B so as to cut off the supply while the bucket is down. The balanced reservoir is then emptied by a small siphon G, and returns to its original position. By another arrangement the main valve fills the tank

Digitized by Google

at once, and water overflows into a bucket which tilts and shuts off the supply; taps on the side of the tank allow a certain small portion to flow into a second small bucket which pulls down the flexible discharging-siphon. Instead of starting a siphon, the tilting bucket may open a valve in the bottom of the tank.

10,558. Ostrorog, Count S. J. d', [*trading as* Walery]. July 24.

Enamels.—Relates to means for obtaining photographic pictures on enamel. A plate coated with a bichromate preparation is exposed to the light below a photographic positive obtained on glass. It is then gently heated, a dry powdered colour is applied, and a layer of collodion poured over it. The pellicle is floated off in water containing sulphuric acid, guided upon a white enamelled plate, dried, and passed into an enamelling-furnace. The collodion volatilizes, and the design is reproduced upon the enamel and may be coloured. For the imitation of old miniatures the design is reproduced as above, but very lightly and without shading. The plate is then burned, a second pellicle exactly superposed upon the first, and the plate again burned.

10,950. Reed, A. H., [*Smith, C. R.*]. Aug. 5.

Cameras; change-boxes.—Relates to an apparatus combining a camera and a change-box for taking instantaneous photographs. The image is reflected upwards by a mirror at an angle of 45° on to a focussing-glass on the top of the camera. The focussing-glass is covered or shaded with a box and cloth which folds down when not in use. To make the exposure the mirror is turned upwards by a spring, and a hole in the segment of a cylinder attached to the mirror passes in front of the lens as the mirror rises. The plates are contained in a box, and are pressed from behind by a spiral spring. When the plate has been exposed it drops into a box below.

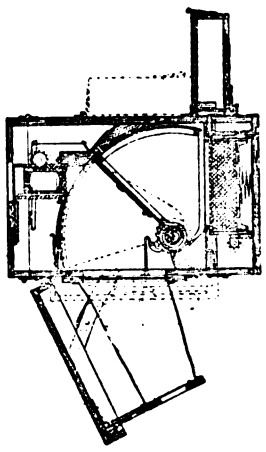

11,212. Robinson, J. V. Aug. 13.

Cameras.—The back of the camera B is fixed to a short tail-piece A hinged to the end of the base-board, which can be clamped in any required position, in or out of line with the base-board, by a bent metal piece C with a slotted hole in one end. The back of the camera is fixed to this tail-piece by a central screw about which it can be swivelled.

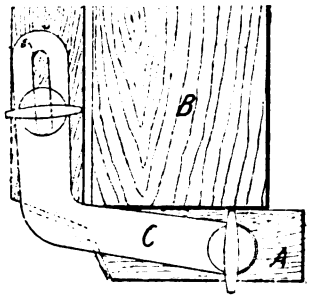

11,556. Himly, E. Aug. 22.

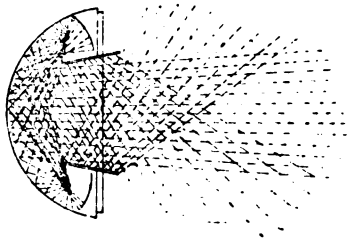

Lighting-arrangements.—The object is to produce a uniform illumination on all sides of the object to be photographed. This is effected by moving mechanically round the object an illuminated screen. The illuminated screen is suspended on the end of a swinging arm pivoted on a vertical axis on a bracket fixed to the wall. The screen is illuminated by the reflected rays of powerful sources of light as shown in the Figure. By making the motion of the light quicker or slower at different parts of its movement the shading may be graduated. A curved rail may be used instead of the swinging arm. A stationary side-reflector is also employed.

11,907. Brewer, E. G., [*Burmeister & Wain's Maskin and Skibsbyggeri*]. Sept. 2.

Emulsions, making.—Relates to the use of centrifugal power machines for making an emulsion of two substances of different specific gravity, but principally of fatty matter in milk, with or without contemporaneous gain of cream. The fat-delivery pipe or feed *c* may be arranged in connection with the bent skimming-pipe *a*, having a bent mouthpiece *b*; *d* represents the edge of the centrifugal reservoir, and the arrows indicate the direction of its rotation. The delivery opening of the pipe *c* points forward in the direction in which the fluid moves in the bent skimming-pipe *a*, in consequence of which a sucking action is set up in

Digitized by Google

the fat-delivery pipe *c*. When the fat delivery is produced by pressure instead of by suction, the

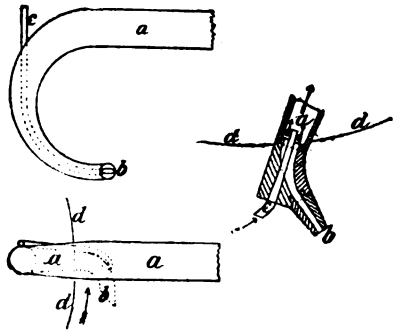

mode in which the fat-delivery pipe opens into the bent pipe may be greatly varied.

12,389. Chapman, J. T., and **Scott, T.** Sept. 15.

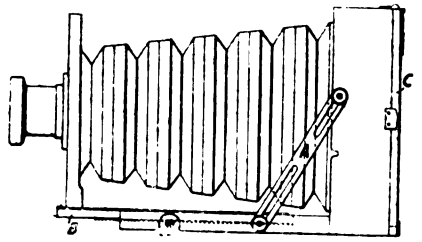

Cameras.—The base is connected with the side frame by double-slotted links A. The part B to which the front is attached is fitted in the base, so that the camera can be extended in length beyond the base. The frame C to which the glass screen is hinged is secured to the camera by catches which engage with studs at the top and bottom. When the camera is folded, the front passes into the back or body of the camera. The front can be adjusted in any position by turning it at an angle, so that the hooks and catches on its front pass under metal guiding-strips.

12,562. Laval, C. G. P. de. Sept. 18.

Emulsions, making.—The object is to effect a fine division of all kinds of fat, so as to produce emulsions to be used as concentrated food, lubricants, &c., or for cleansing fat substances. The fat in a liquid state is poured into the reservoir *n*, and the liquid with which the fat is to be mixed is poured into the reservoir *o*. The cock *m* is then opened, and the force-pump *a* put in motion by the flywheel *g*. The two substances, coming from the reservoirs *n* and *o* in the required proportions by the pipes *l* and *k*, are forced out through the discharge valve *p*, and the emulsion made in the valve chamber, whereupon it rises into the reservoir *t* and runs off through the pipe *u*. The lift of the discharge or emulsion valve *p* is

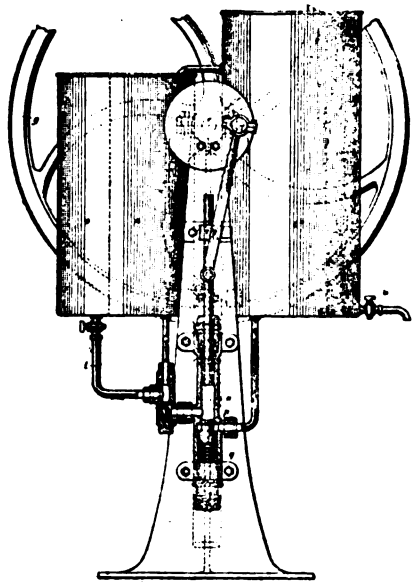

determined by the resistance of the springs *q* and the regulating-screw *r*.

12,772. Shew, F. Sept. 24.

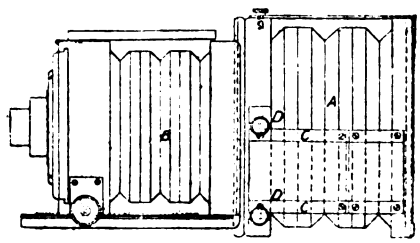

Cameras.—The object is to enable a camera and lens of given size to be used for working plates of larger sizes. An additional frame or bellows body A is provided, with no bottom board. One end is provided with the ordinary ground glass. The other end is capable of being slid into the groove of the camera frame B, into which the lens front is usually slid; a lens front is then slid into the grooves of the camera ordinarily used for the back. In cameras where focussing is obtained from the front, the extra frame is connected to the camera by sliding it into the grooves for the dark slide. The extra frame may be made without bellows body. C, C are folding bars which, by the aid of binding-screws D, D, hold the additional frame A in a position of extension.

Digitized by Google

12,855. Watts, W. Sept. 27.

Tripod and like stands for cameras. The upper part A of the leg of a tripod is a tube in which a wooden bar B slides. The tripod when folded assumes the shape of a walking-stick C. The cross-section of each tube is triangular, to enable them to fold well together. The upper ends of the sections are held together by a suitable cap D. The tripod top E is made of two pieces riveted together; the outer ends of the arms are jaws in which staples at the ends of the tripod legs are inserted. The end of the solid tube is split and a spring inserted to press it out, to produce the necessary frictional resistance.

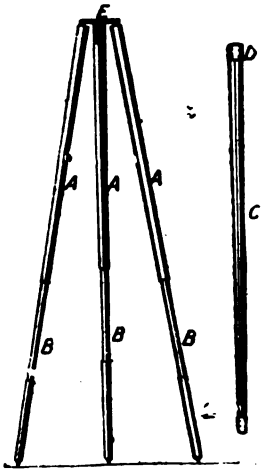

13,103. Philippi, L. H. Oct. 2.

Photo-mechanical printing. — The picture is printed by a succession of printing-surfaces prepared from one negative or positive, the exposure taking place through a plate provided with parallel or other lines. The hatched or lined plate is turned at a different angle, and the length of time of exposure varied for each surface.

13,156. Cadett, J. W. T. Oct. 3.

Shutters.—The exposing part of the shutter is liberated by pressing a lever, and then kept open by a catch till the liberating-catch is again moved. For quick exposures the catches which keep the shutters exposed are put out of gear. The invention may be applied to an ordinary drop shutter. A projection C on the side of the slide A is supported on the upper end of a vertical lever B; when this is liberated by the movement of the lever the shutter descends till the stud is caught on a screw pin C fixed in the other end of the lever. This keeps the shutter open till the lever is again moved. For quick exposures the screwed pin is moved back to allow the slide to fall clear. when the shutter is moved up and down by a pin on a rotating disc the stops are fixed on the disc.

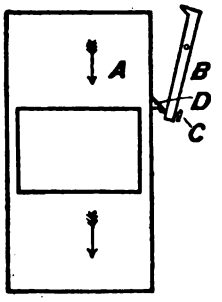

13,318. Thomson, J. Oct. 8.

Cameras.—A whole camera A is combined with a portion of another larger camera B, to enable larger plates to be used. The back frame C of the whole camera is constructed to fit within the larger back frame. For small plates the extra back may be removed and the smaller one fixed to the base-board.

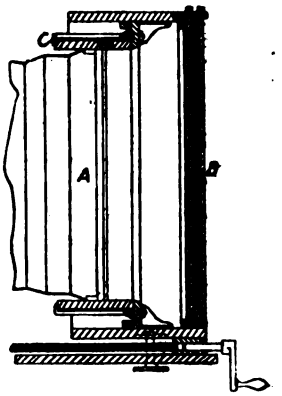

13,433. Stanford, E. C. C. Oct. 11.

Sensitized films. — Alginates, obtained by a special process, when mixed with potassium bicarbonate form a compound rendered insoluble on exposure to light.

13,596. Boult, A. J., [*Eastman, G.*, and *Walker, W. H.*]. Oct. 14.

Sensitized plates and films.—The object is to produce sensitized films capable of use in making negatives or positives in place of the usual glass plates. A is the paper or other fabric, B is a coating of pure gelatine, and C is the sensitized film of bromo-gelatine rendered comparatively insoluble by the addition of chrome alum. After the film has been exposed and developed it is pressed on glass and heated to melt the coating B and detach the film C from the paper support A. C is then removed from the glass and used as a negative. Glycerine is incorporated with the gelatino-bromide film to make it more flexible. The pure gelatine coating may be applied to both sides of the paper.

13,640. Iago, C. T. Oct. 15.

Photo-mechanical printing.—Relates to a process for the production of relief blocks for surface printing, from photographs, paintings, or drawings. The design is first drawn or transferred to, or photographed on a wood block, and the subject is then engraved in intaglio upon wood, and after blackening the lines or surface, to produce the necessary contrast, it is photographed; or a print, taken as from a copper plate, may be obtained and photographed. The negative so obtained is used for the production of relief printing-surfaces by any of the usual methods. An impression in transfer ink may be transferred to a plate of

Digitized by Google

varnished glass, and the same used as a mechanical negative, or transferred to a zinc plate directly for etching &c. The wood block may be engraved partly in intaglio and partly in relief, and the contrast of lines and surface for photographing may be so produced that the whole of the design is of one colour.

13,774. Worsnop, J. M. D. Oct. 17.

Sensitized films.—Relates to means for transferring films to canvas. The glass or other suitable surface which acts as a support for the photographic film is prepared by coating it with a thin layer of wax or other substance to which the film will lightly adhere. To transfer the film, the canvas or other suitable surface on to which it is to be permanently transferred is covered with dissolved gelatine or strong waterproof cement, and is then pressed against the film and held there until the cement becomes fixed to the film, when by separating the canvas from the glass the film will come off on the canvas. To transfer a coloured photograph, the film is painted in the required colours, then transferred temporarily to the waxed surface, and finally on to the canvas surface.

14,156. Smith, G. P. Oct. 25.

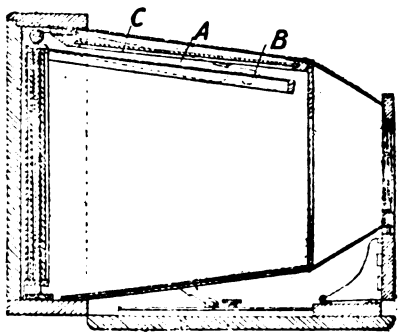

Dark slides; cameras; shutters.—The plate cases or dark slides have hinged instead of sliding covers which expose the plate by opening inside the camera. A swing frame A is suspended inside the camera so that it can be turned into a horizontal position by a handle on the outside. At the bottom of the swing frame are hooks B, B which fit temporarily to knobs on the cover of the plate case. The camera may be of the ordinary bellows form, but preferably it is made by attaching to the sides of the frame four folding flaps. One or more thicknesses of flexible material are wrapped round the camera The focussing-glass C is fixed by means of a hinge so that it can be folded up to form the roof of the camera when not in use.

14,335. Honey, W. G. Oct. 30.

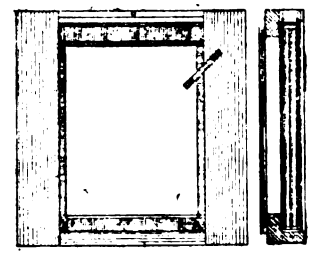

Cameras; dark slides.—The holder is movable, has a hole in the centre, and is made to fit at the back of the camera. There are grooves at one side to hold a single or double dark slide. The dark slide has a space at the top for inserting the plate, and a thin cover fitted over the plates to exclude the light. Another cover is placed over this, in which the slides work. There are grooves on the reverse side for a focussing-screen.

14,457. Green, C., and Fuldge, L. V. Nov. 1.

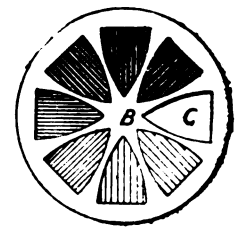

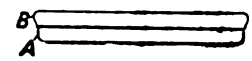

Actinometers.—A metal box A, preferably circular and of a size to suit the pocket, is provided with a perforated lid B, through which a graduated scale of tints can be seen, these tints being generally painted on porcelain. One perforation C extends also through the porcelain plate, below which is a piece of sensitized paper. The actinic power of the light is estimated by observing, in reference to the scale of tints, the colour the paper assumes after a certain time of exposure. An opaque plate is put below the sensitized paper, so that several sheets may be kept under it in A, without fear of their being damaged.

14,885. Sawyer, J. R. Nov. 12.

Photo-mechanical printing.—Photographic printing-surfaces are prepared by exposing to light before a negative a sheet of paper with a sensitized coating of gelatine, sugar, &c., from which a relief film is obtained by washing away the soluble portions. To this gelatine compound is added, before applying to the paper, amorphous graphite or plumbago, previously assorted by passing through sieves, which serves to give the necessary grain to the film, and also to render it conducting. The printing-plate is obtained by electrodepositing copper upon the film, which is laid upon a polished copper plate for that purpose.

15,198. Ashford, J. Nov. 19.

Tripod and like stands for photographic cameras and similar purposes. The head is of the usual

Digitized by Google

triangular form. Each projection is slotted horizontally from the outside, the slot ending in a larger circular recess. On the upper end of each leg of the stand an oval pin is fixed, with the longer diameter in the direction of the length of the leg, its smaller diameter being rather less than the width of the slot. The leg being in a horizontal position the pin may be inserted through the slot into the recess, where it may be turned into the standing position. The slot may be made without a larger recess at its inner end; in this case a spring is attached to the underside of the head, its outer end being turned up so as normally to close the slot. It is formed with an inclined-plane end so that a round pin on the leg may be pushed into the slot, the spring rising behind it to prevent its release.

15,202. Honey, W. G. Nov. 19.

Lifters or holders for plates. — The purpose of the holder is to carry photographic plates while they are being developed, fixed, &c. It consists of a frame of tin, ebonite, or other suitable material, with pieces curved round at the sides and bottom to retain the plate, and a handle A jointed to one side.

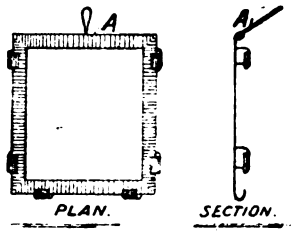

15,542. Boult, A. J., [*Eastman, G., and Walker, W. H.*]. Nov. 25. *Amended.*

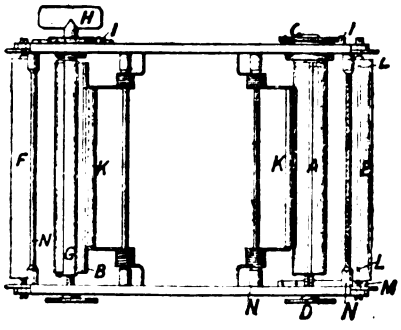

Roller slides for sensitized tissue. The tissue is wound on the roller A, with its sensitive surface inward, its inner end being secured in a longitudinal groove in the roller by cement. The roller is detachable from the slide so that rollers with rolls of tissue may be carried in small cylindrical cases: the roller is slotted diametrically at one end to fit a bar mounted on a spindle passing through the spring barrel C, its other end being supported by the pointed screw D with milled head, by using which the roller is released. The spindle in the barrel C is attached to the inner end of a coiled spring, the outer end of which presses against the fixed barrel, so that when tissue is drawn off the roller A it is always under tension. After leaving the roller A, the tissue passes round the guide roller E, along the surface of a flat support (not shown) to the guide roller F, and under it to the receiving-reel B, to which its end is secured by the longitudinal clip G, pivoted at the ends to the reel. The reel is turned by a detachable key H, inserted through a light-tight socket in the case into a threaded hole in the end of the reel. Both rollers are provided with friction pawls I, I to prevent reverse movement, and rollers K, K pressed by springs on the rolls of tissue act as brakes. The guide-roller E is provided with a longitudinal groove to guide the knife used in cutting the tissue, and with points L, L for marking off fixed lengths: it also carries a pin M lifting a spring at each revolution, the recoil of which against the frame produces an audible noise by which a definite amount of tissue may be measured for the exposure. Spring clips along the edges of the tissue prevent them from curling up during exposure. The rollers &c. are mounted on side frames connected by rods N, N, and attached by catches to the back of the slide, which is also detachably connected to the sides carrying the exposing shutter and adapted to the camera.

15,757. Haddan, H. J., [*Suck, H.*]. Nov. 29.

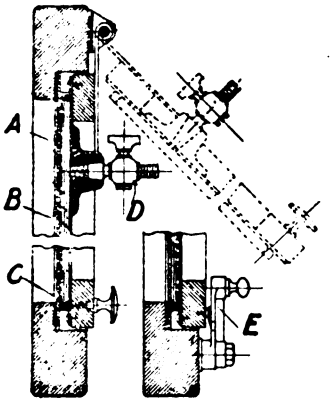

Printing.—The sensitive paper is put in contact with the negative, which may be on glass or on an impervious transparent tissue; or, if on paper &c., it is laid upon a glass plate A. On the back of the sensitive paper is placed a layer of a textile fabric which is secured to the airtight back B, preferably of rubber, the edges of which are formed with a soft rim C, which rests upon the glass plate or negative, preventing access of air to the interior. The interior is exhausted of air by connecting it through a stop-cock D with an air pump, which may be mounted on the top of the frame supporting the negative. After withdrawing the air the stop-cock is closed, when the sensitive paper will be pressed equably against the negative by the pressure of the atmosphere on the back of B; this being balanced by the pressure on the front of

Digitized by Google

the negative, there is no tendency to break the glass. Creases in the paper are removed by inserting a stiff card between the back of the paper and the textile layer. The negative is mounted in a light frame, the back of which compresses the rim C sufficiently to make it airtight at the commencement of the exhaustion. E is the latch used for holding the back against the front of the frame.

15,887. Middlemiss, W. Dec. 3.

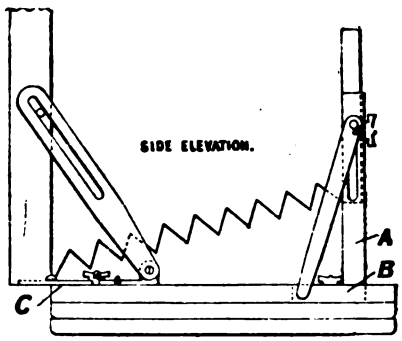

Cameras.—Relates, firstly, to a method of attaching the camera front and its supports so as to enable a long or a short focus to be obtained, while the front and its supports may be folded into the camera bottom. A movable frame slides in the bottom of the camera, being moved by a screw or rack and pinion in the usual manner. On each side of this movable frame are two brass angle-plates B, which may be fixed at any point on the movable frame by set-screws sliding in grooves. To the brass angle-plates are pivoted the frame A carrying the front and two brass struts slotted near the top end as shown. When it is desired to fold down the front, the pieces B, with the frame A and struts, are shifted to the back of the movable frame, and the frame A is then turned down round its pivots (not shown). The second part of the invention consists of a brass plate C to which is hinged the bottom of the camera back. At each end of the brass plate is a curved slot hole concentric with the centre of the plate, to allow the back to be adjusted about a vertical axis. The third part of the invention consists of an extra base-board as shown, the size of the camera bottom, which acts as a top to the tripod stand, and which is used to protect the focussing-screen when the camera is not in use. This base-board is provided with pins to take in holes in brass plates on the tripod legs.

16,087. Sands, H. C., and **Hunter, J. J.** Dec. 6.

Cameras. — The focussing-motion is divided between the front A and the body B of the camera. This is effected by carrying the front and back or body on separate slides actuated by racks C, D gearing into opposite sides of the same pinion E. The front and body fold down separately on one another. The body is mounted on a cradle F which swings on a vertical axis, and is

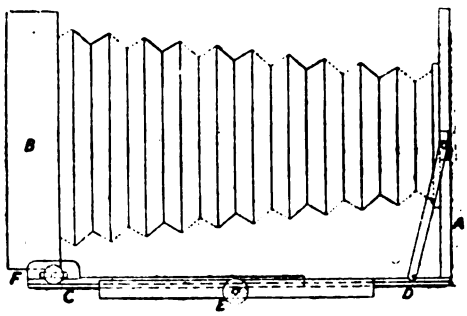

connected removably to the cradle by a horizontal axis.

16,334. McKellen, S. D. Dec. 12.

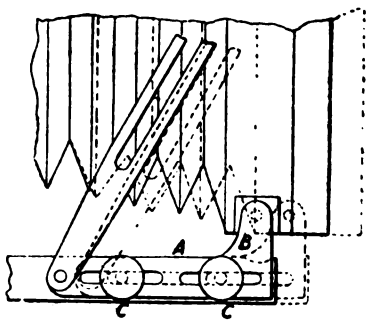

Cameras.—Relates to means for allowing a horizontal swing, so that one side of the camera back or body may be set nearer to or farther from the front board than the other side. Side plates A are attached to each side of the base-board. Each side plate has a swing B to which the camera back or body is pivoted. One or both side plates are movable and can be fixed in any position by mill-headed screws C, C in slotted holes. The horizontal swing is thus obtained.

16,694. Falk, E. Dec. 19.

Photo-mechanical printing.—Relates to a method of producing the grain in photographs for use in preparing printing-surfaces. The invention consists essentially in the combination, upon the photograph, of an opaque and a transparent set of dots or lines which run in different directions. These may be produced mechanically or photographically; as by marking or photographing the transparent lines, and printing the black ones, upon the negative, or by drawing white and black lines or dots upon the picture before taking the negative.

Digitized by Google

16,727. Todd, I. Dec. 20.

Dark slides.—A is the frame of a double dark slide. The interior is made a little larger than the size of the plates, and the depth greater than the thickness of the plates to take in plates of different thickness. The opening at one side is larger than at the other and through this the plates are passed. The plates are dropped on to flanges B and held in position by adjustable catches C, C. A turn knob or button to fasten both the doors or slides at once is fitted on the top.

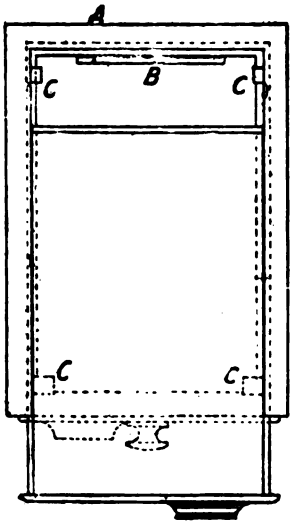

16,979. Schenkenhofer, J. Dec. 29.

Copying drawings.—A slate colour is produced in paper by saturation in a solution of iodine and potassium iodide. The drawing is then copied on the coloured paper with a bleaching-liquid consisting of a solution of sodium hyposulphite. The drawing thus produced is used as a negative to print from on sensitive paper.

17,002. Clark, A. M., [*Correja, H.*]. Dec. 29.

Cameras.—In order to fix the image in the centre of the sensitive plate in instantaneous cameras, a long box A is fixed to one side of the camera by an adjustable attachment B, so that its axis can be adjusted parallel to the optical axis of the camera. Transverse bars C, C are fixed at one end of the box and diagonal bars at the other, so as to bring the object in a line with its central axis, which is so adjusted that the image will be at the same time on the centre of the sensitive plate.

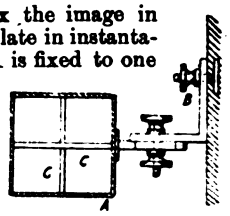

A.D. 1885.

424. Henderson, A. L. Jan. 12.

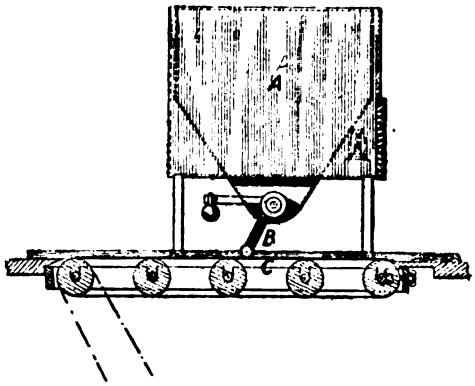

Sensitized plates and films.—Relates to coating glass or other plates, paper, cardboard, or other material with liquid gelatine or other fluids, particularly for use in photography. The emulsion is placed in a reservoir A surrounded by a water bath and flows through a ⊥-shaped piece B, which is perforated on the lower side of the transverse member. The plate &c. C is carried under the perforations through which the emulsion is discharged, and is carried forward by an endless band. The action of lifting the ⊥-piece opens a grating stop-cock for the discharge of the emulsion.

---

491. Wilson, W. V., and **Storey, J.** Jan. 13.

Varnishing photographs. Nitro-cellulose is dissolved in amyl acetate and amyl alcohol, the resulting product having the consistency of varnish. The preferred proportions are:—Nitro-cellulose 100 parts, amyl acetate 400 parts, and amyl alcohol 400 parts.

Digitized by Google

976. Pumphrey, A. Jan. 23.

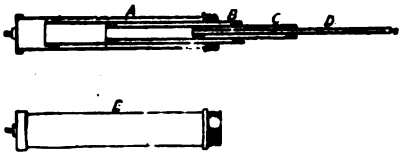

Tripod and like stands specially applicable for photographic cameras. Each leg is made up of several pieces A, B, C, D, with screws formed at the end of each length so that they can be screwed together. The screws may be put in as a bush or formed in the body of the tube itself. The lower extremity of the bottom tube D is made of a pointed shape; the top is provided with a screw for attachment to the tripod top. When packed up, as at E, all the lower pieces fit inside the top piece, and a cap is screwed on to the end.

1072. Thomson, J. Jan. 26.

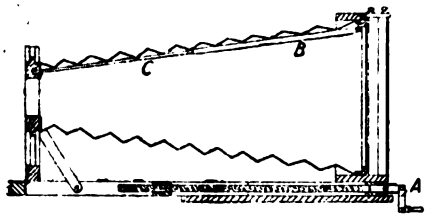

Cameras.—Consists of improvements in the Kinnear camera, to make it stronger and more portable. The handle A of the focussing-screw is jointed so that it can be straightened out at right-angles to the screw and folded in a recess in the frame. To prevent the bellows from sinking down in the centre part, it is supported by a telescopic tube and rod B and C attached to the front and back of the camera. To increase the focussing-range of the camera, an extra loose length is applied to the ordinary focussing-screw. Movable guides are fitted on the sides of the frame moved by the screw. Stops fixed on the side of the movable frames pull the lengthening-frames out as required.

1120. Branson, F. W. Jan. 26.

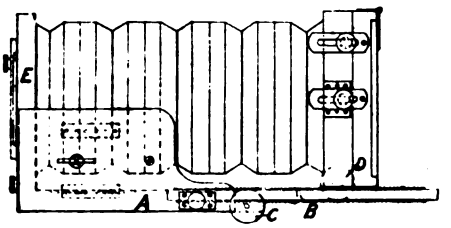

Cameras.—For adjusting for focussing purposes, within the baseboard A a frame B is fitted to slide longitudinally. This frame is actuated by a pinion C gearing into racks on the lower side of the frame. Racks are also placed on the upper surface of the frame, into which a pinion D connected to the back of the camera gears. The front E of the camera is always rigid.

1232. Wise, W. L., [*Notz, J. F.*, and *Konrad, F.*]. Jan. 28.

Emulsions, making.—Relates to a fireproofing-emulsion for fabrics &c. A solution is obtained by adding to 90 kilogs. of water 10 kilogs. of ammonium sulphate, 1 kilog. of ammonium carbonate, ½ kilog. of borax, $\frac{1}{10}$ kilog. of mercury bichloride, the decoction obtained by extracting 2 kilogs. of peppermint in 6 kilogs. of water at 85° C., and 150 grammes of carbolic acid with a S.G. of 1·062 at 20° C. To this solution are added 6 kilogs. of sodium bitungstate dissolved in 94 kilogs. of water, and as much of a saturated solution of calcium chloride as will prevent solidification or precipitation. The liquid is then put in a vessel provided with an agitator and kept at about 70° C., and is converted into an emulsion by passing into it the products of distillation by heat of 1 kilog. of Peru balsam and $\frac{3}{10}$ kilog. of camphor dissolved in 2 kilogs. of acetic or other ether. Fabrics and other materials to be rendered uninflammable, obnoxious to vermin and the growth of fungi, &c. are immersed in the final product.

1406. Urie, J. Jan. 31.

Printing. — The object of this apparatus is to cause a strip of sensitive paper A to pass automatically and intermittently in the direction of its length under the negative B. The movement of the

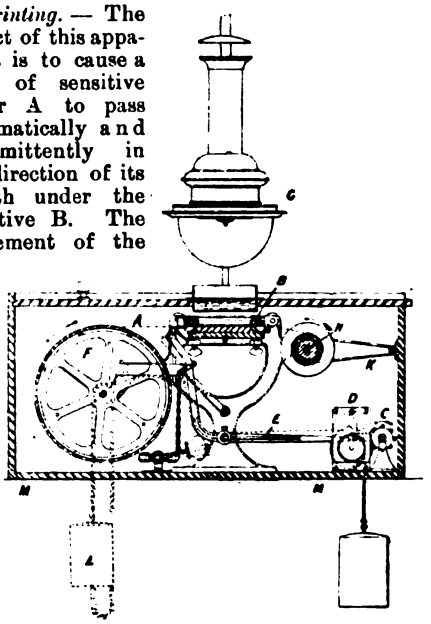

apparatus is regulated by a barrel C with pegs actuated by clockwork D. By moving the end of a lever E along the barrel so that it may be actuated by different sets of pegs, the lever is moved at any suitable interval of time. The lever

Digitized by Google

by acting on an escapement arrangement allows the barrel F on which the paper is wound to move forward one step; it also shuts off the gas from the lamp G, and lifts the printing-frame in which the negative B is placed, before each movement of the paper. The sensitive paper is unwound from a reel H held by friction straps K, passes under a negative, which is placed in a printing-frame under the gas or other light, then on to the large drum F driven by a weight L or otherwise. The whole apparatus is enclosed in a box M M impervious to light. In a modification of this apparatus, a long strip of paper is secured over a board, which is fitted in a shallow box. A square opening is made in the box in which the printing-frame with the negative is fitted. The board descends with the paper at intervals regulated by clockwork as in the previous case.

2181. Boult, A. J., [*Westbrook, C. S.*]. Feb. 17.

Tripod and like stands for rock drills. The rock drill is supported in parallel bevelled grooves A, A¹ in the cradle B, being

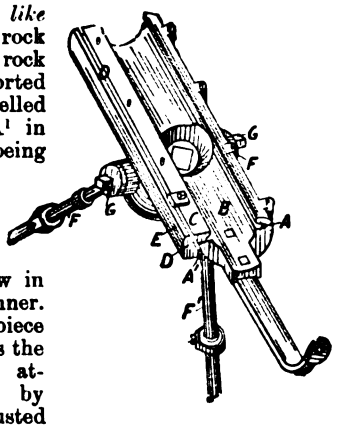

fed by a screw in the usual manner. The bevelled piece C which forms the groove A¹ is attached to B by bolts and adjusted by a wedge-piece D between it and a rim E on B. The legs F, F, and F¹ are telescopic, the upper portions being solid and the lower tubular, and the upper and lower parts are locked together by set-screws passing through removable nuts in sockets at the tops of the tubular portions. Trunnions G, G, keyed into each side of the saddle or bed carrying the cradle, each pass through one of the collars on a fork at the top of the back leg F¹ and through a boss on one of the side legs F, F. The bosses of the side legs are pressed against the collars on the back leg, and these collars against the saddle to lock the machine when adjusted, by turning inclined washers on the trunnions by gibs and keys secured by set-screws passing through the ends of the trunnions.

2241. Branson, F. W. Feb. 18.

Shutters.—Relates to the inventions described in Specifications No. 1650, A.D. 1883, and Nos. 2767 and 8852, A.D. 1884. An additional drop shutter B is connected by cords C, C or otherwise to the original one A. When the exposure is to be made, by pulling an elastic cord attached at D, the bottom slide drops down out of the frame, the central space passes across the lens, and the top slide takes the place of the lower slide B.

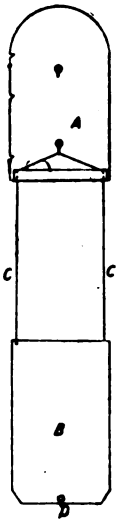

2496. Brown, J. E. Feb. 24.

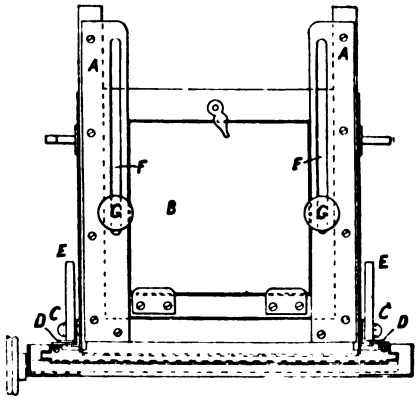

Cameras.—The rising front consists of a rectangular frame A enclosing a movable panel and supported by an outer frame pivoted on two pins C, C to two angle-pieces D, D capable of sliding on the upper portion of the carrying-frame. The pieces can be clamped at any position on the carrying-frame by eccentric-headed levers E, E. The outer frame has vertical slots F, F and set-screws G, G for setting the rising frame at different heights. The front and back are held in position by slotted links. The frame which carries the front is made to slide backwards and forwards in grooves cut in the base frame.

2699. Warnerke, L. Feb. 28.

Sensitized plates and films.—A transparent or semi-transparent fabric is coated with a film sensitive to light on both sides. When the plate thus prepared is exposed in the camera an image is produced on both films. The object of the image on the back film is to counteract inequalities in

Digitized by Google

the structure of the paper, as a dark part in the structure of the paper will produce a proportionally lighter image on the back film.

2759. Wollaston, C. J. March 2.

Shutters.—A slide or slides which turn upon a centre open and close the passage for the light and are connected with regulating-mechanism. Two segmental pieces A, A, mounted on centres and having elongated openings B, B which move past each other, pass through the lens tube between the lenses. After the exposure the segmental pieces are held in position by any ordinary trigger arrangement, on releasing which they drop back again. The exposure is regulated by the pressure of a pad on the disc C, which pressure is regulated by a set-screw D and spring. Diaphragm openings in a plate swinging on its centre may be used, or the ordinary diaphragms. It is held in any required position by a spring detent E fitting in notches. The apparatus and lens are fitted in the camera by means of a screwed flange. One slide or piece with the opening may be used to close the shutter by one continuous movement.

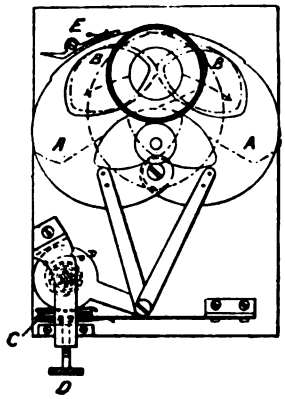

2888. Boult, A. J., [*Matthie, W. A. C.*]. March 4.

Head-rests.—The invention is described with regard to adjustments for music stools, but is stated to be applicable to photographers' head-rests. The stem B of the music stool is pressed upwards in its socket by a spiral spring D. Notches *a*, *a*, which may be square in section as shown, or ratchet-shaped, are made at intervals in the stem. A pivoted catch or pawl E is caused by a small spring to engage with the notches; it may be withdrawn by actuating the lever I either by hand or by the treadle action K, L. As soon as the catch is disengaged, the seat is pressed upwards by the spring D, and may be adjusted and fixed at the required height.

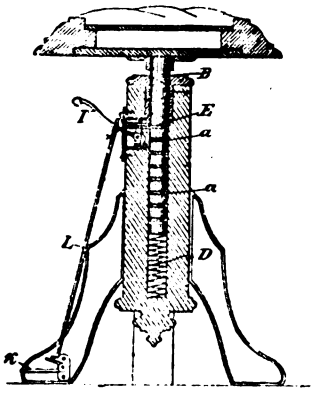

3134. Lake, H. H., [*Angerer, C.*, and *Göschl*, —]. March 10.

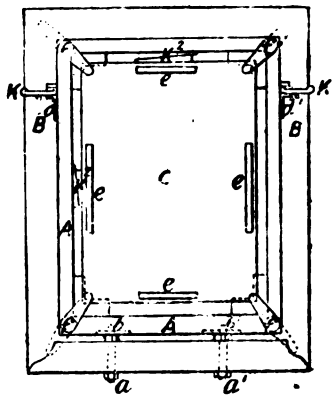

Cameras for producing grained or lined negatives from pictures &c. for use in obtaining lithographic and other printing-surfaces. A special frame A is provided for fixing in the camera. Two taper studs *b*, *b*¹ are fastened in the camera by bolts *a*, *a*¹ and project upwards into holes in the frame; locking-bars K rotating on vertical studs fixed in the camera B serve, by coming into contact with the catches *d* on the frame, to press the latter firmly inwards and downwards upon the studs *b*, *b*¹. In the frame A the prepared plate C is placed and held by the wedges K², and upon this narrow strips of thin cardboard *e*, *e*, on which strips a "diapositive" with shade lines or dots is placed without touching the plate C, the whole being fixed by the spring clamps *f*, *f*. The plate is then exposed for some time, and the diapositive changed for one differently lined and the plate again exposed, a grained or lined negative being thus obtained.

3185. Boult, A. J., [*Palmer, E. J.*]. March 11.

Sensitized plates and films.—Relates to means for coating dry plates. The plates A, A to be coated are placed on a revolving band B and carried under a distributing-vessel C. The belt carries the plates after receiving the emulsion through a refrigerator and drying-room, and discharges them on to an automatically-moved rack. The emulsion is contained in a glass reservoir

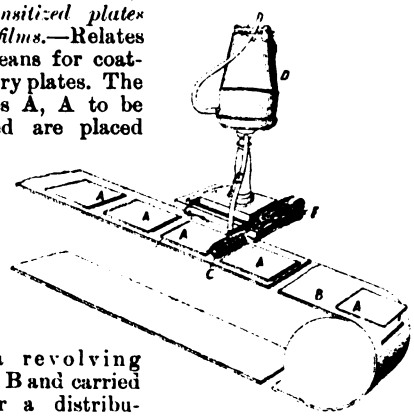

Digitized by Google

surrounded by an urn D containing hot water. Inside the reservoir a sponge filter is placed at the end of the flexible tube E, by which the emulsion is drawn off to the distributing-vessel. In one form of the distributing-vessel the emulsion is discharged through a longitudinal slit covered with flannel. The emulsion is automatically admitted to the distributer by a clip F actuated by bridges on the endless band between the plates, in sufficient quantity to be discharged on the plates when the supply is cut off by the clips. The plates are carried from the band on to the rack by levers actuated by pins on the drum round which the endless belt passes. The same levers by ratchet gear raise the rack one step every time to receive the next plate.

3581. Sharp, A. P. March 20.

Roller slides.—The film or tissue A is fixed to the receiving-roller B by threading it through a slit in the roller. This roller has a square screw centre to take the key. The paper passes over a flat piece of ebonite E and under a plate of glass F in front of it to ensure a perfectly-flat surface for exposure. The paper is unwound from the roller C, and passes over the measuring-roller D, before passing over the piece of ebonite. A spring roller G presses the paper against the measuring-roller. A spring H is actuated by a stud on the shutter so that when the shutter is withdrawn the end of the spring marks the paper. A sounding-apparatus on the measuring-roller indicates the quantity of paper unwound.

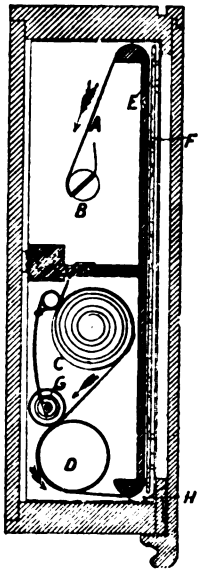

3755. Taylor, H. D. March 24.

Photometers.—In the Figure, A is a light-tight lamp (holding a standard candle) with an opening in which is placed a disc of opal glass B illuminated by the candle. C is a sliding strip of metal with a graduated series of apertures to come over the opening in the lamp as required. A hollow socket D rotates stiffly within the tube carrying the strip C, and the observing-tube E, E is fixed at right-angles to its axis. Within the observing-tube is a diaphragm F perforated by a central hole round which is painted a white ring for receiving light from B. In one end of the tube E, E blue glass is placed, so that only chemical rays of light pass through the aperture in F, while the other end is provided with a lens. In using the instrument, the observing-tube is directed towards any required part of the subject to be photographed, and the eye observes a blue spot of light in the centre of F. The slide is then raised or lowered until the white ring is practically equal in brilliancy to this blue spot, and the number of the aperture then over the disc gives the clue to the exposure required.

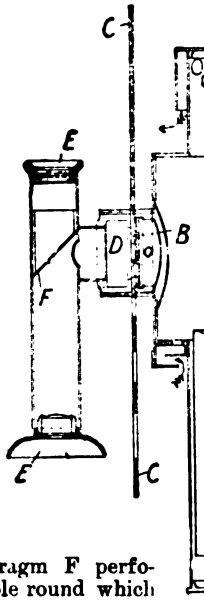

3766. Dawes, A. H. March 24.

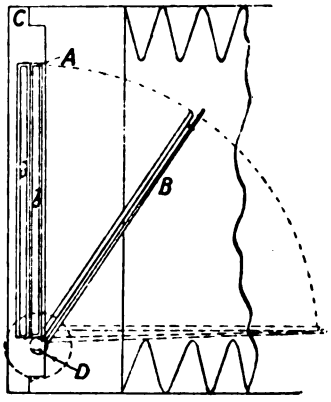

Dark slides.—A number of flat cases A of thin metal or wood are constructed. The cases are made with a division between them and a hinged or other lid B on each side. In place of the ordinary dark slide a movable frame C is constructed as an end for the camera, one side being blank and the other exposed to the interior of the camera. The frame is attached to the camera by having a flange on one side which fits into a corresponding groove in the camera. It is arranged to receive one of the cases with its lid towards the lens. The lid of this case can be opened from the outside by a small shaft D.

3778. Clark, A. M., [*Anthony & Co., E. & H. T.*]. March 24.

Printing-paper.—The object is to produce a roughened surface for touching with crayons on gelatino-bromide paper, by mixing the emulsion with a toothing substance such as sulphate of baryta; pumice stone or emery powder may also

Digitized by Google

be used. To every four fluid ounces of the emulsion about one teaspoonful of the toothing substance is added. If sulphate of baryta is used it is preferable to use it in the wet state.

4102. Lowdon, G. April 1. *Amended.*

Cameras; shutters. —Relates to a portable camera and lens with shutter for instantaneous work. A simple framework is held rigid by the tension of the bellows body A, and collapses when the front D is relieved from the supporting-sides B and C by the finger and thumb. The two supporting-sides fold down on top of the front. In the lens is placed a revolving diaphragm E with one opening, which is kept shut by means of a spring coiled round the lens. The spring has a travelling catch to give it different degrees of tension. This arrangement forms the shutter.

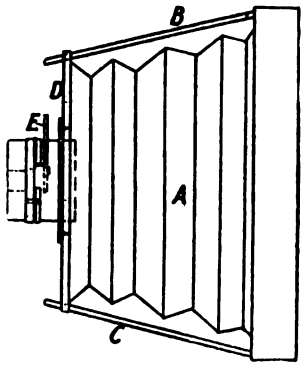

4191. Johnson, J. H., [*Joltrain, C. Z.*]. April 2.

Copying drawings; sensitized films.—A sensitive film is formed by adding ferric salts mixed with one or more corresponding acids or acid salts to gum, gelatine, dextrin, or the like. The developing-solution is yellow or red prussiate of potash. Fabric or paper is coated with the sensitive mixture. Woven fabrics before being coated must be rendered impermeable; with wood, metal, or glass an insulating-film is applied. After exposure the sensitive fabric or other arrangement is placed in a bath of the developing-solution, and afterwards washed in an acid bath. The gummy matter is then readily removed, and the blue portions between the lines washed off by a jet of water. The lines may be blacked by tannic solutions. The paper may be restored to its original condition by washing with acidulated water.

4288. Nash, S. C. April 7.

Cameras. — Consists of an adjunct to the camera for storing and bringing into focus any number of sensitive plates. The plates are contained in a box A below the camera B, the edges of the plate holders C being attached to a canvas belt, which can be turned by an axis D passing through the box and out at one side. The axis is square with a side equal to the breadth of the edge of one of the plate holders. When the axis is turned the plates in their cases are brought successively into focus at E. After exposure the plate is folded down into the other half of the box. There is an adjustable device F for holding the movable focussing-glass, and grasping and holding in place the plate while the picture is being taken. The camera may be turned end for end on the box and used in connection with the plates at the other side of the plate holders. There is a counting-device which in connection with a list enables any required plate to be exposed and prevents double exposure. A spring is placed at the bottom of the plate box to support the plate holders. A sliding cover of slats at F covers the end of the camera and the box out of which the plates to be exposed are swung. The lens septum plate G is fitted in lateral slides on the end of the camera. To cover any portion of the plate, shields H^1, H^2, which can be swung round inside the camera, are used. The plate K which carries the fork to hold the focussing-glass is movable to give more or less inclination.

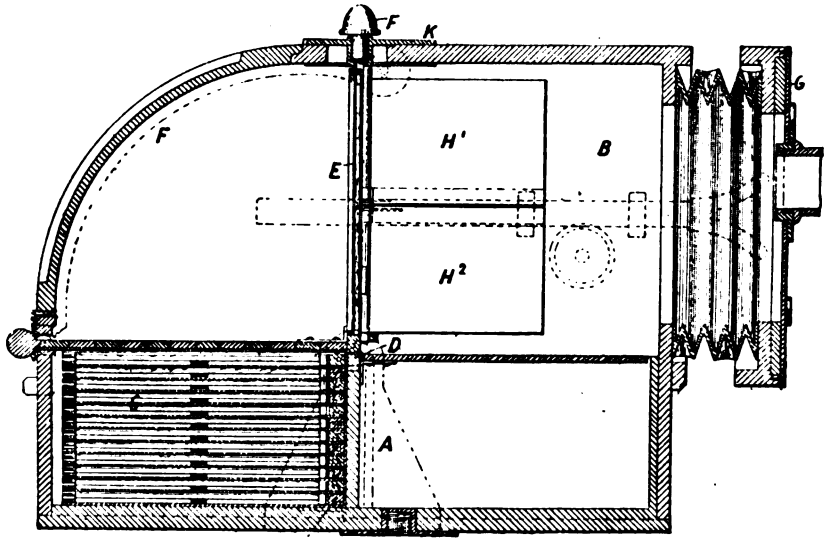

Digitized by Google

4378. Marlow, E., and Bishop, H. April 9.

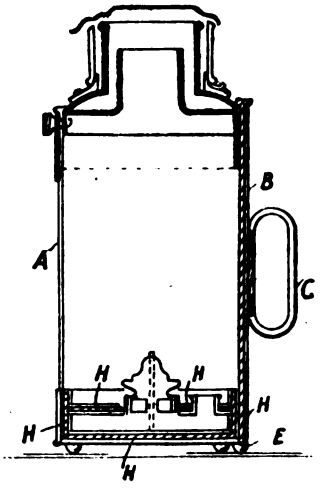

Lamps, dark-room. A shadowless lamp is constructed of ruby glass A bent into a semicircular form and held by the flat metal back or door B carrying the handles C and sliding in grooves, so that it can be raised for trimming the wick, and is fastened down when in use by a spring catch E. Heating is avoided by packing the base and sides of the lamp with cork H, H, or other bad conductor of heat. The wick-raising spindle is made in two parts, of which the outer one passes through the case of the lamp and has a telescopic action, so that when it is drawn out the burner may be removed.

4528. Stanley, W. F. April 13.

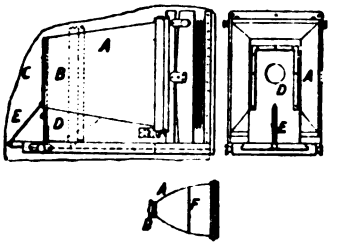

Cameras.—By means of this apparatus a camera may be focussed without the use of a distinct focussing-cloth. A hood A is placed behind the focussing-screen with a lens B for examining the image on the focussing-screen. An extra attached covering-cloth C covers the whole apparatus when the photograph is being taken. The lens in its frame may either be held stationary or fixed to its baseboard, or it may move on this for adjustment towards the focussing-screen. D is a folding board which supports the lens, and E is an india-rubber strap which holds it up. F is a wire ring to keep the movable part of the apparatus distended.

4531. Sarjeant, W. L. April 13.

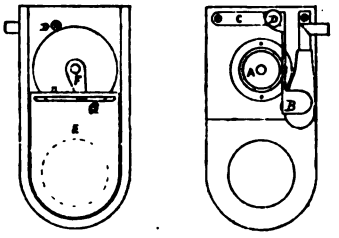

Shutters.—The shutter consists of a slide E working in a casing and actuated by a crank F, the pin of which works in a transverse slot G. The crank is turned round by a milled head on its axis; on the axis is fitted also a spiral or watch spring A which is wound up by turning the milled head and actuates the shutter when the latch is released. The latch is placed on a lever B having at its opposite end an adjustable detent pin D, so that when the latch is released the detent pin will, when required, permit only half a revolution of the crank and keep the shutter open for any required time. For instantaneous exposures the detent pin is adjusted so as not to catch. The latch may also be raised by a pneumatic arrangement.

5014. Kershaw, J. April 23.

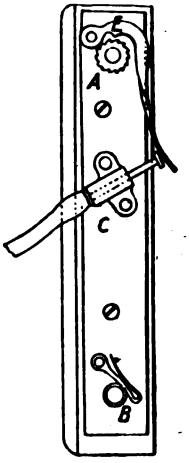

Shutters.—The shutter consists of a spring blind on two rollers A and B, with an opening which passes in front of the lens. The shutter is liberated by a pneumatic arrangement C which acts on a lever forming the extension of a ratchet pawl E which engages in a ratchet-wheel on one end of one roller. This lever falls back by its own weight instead of being pressed back by a spring.

5052. Mewburn, J. C., [*Cellérier, L. J. H.*]. April 23.

Colouring; printing.—Relates to a method of obtaining coloured photographs. A photographic positive is prepared on glass or paper. An image is obtained from this transparency on albumenized or other suitable paper. Auiline or other colours are applied to this image by a brush with honey, in simple uniform tints, to correspond with the model. When all the colours have been applied they are fixed in a bath of 200 parts of alcohol and 50 parts of acetic acid. A positive is obtained from the original

Digitized by Google

negative on carbon paper without salt or silver. The image is developed on a fine glass previously waxed. This image is to be transferred to the coloured silhouette obtained by the first operation.

5181. Grimston, G. S. April 27.

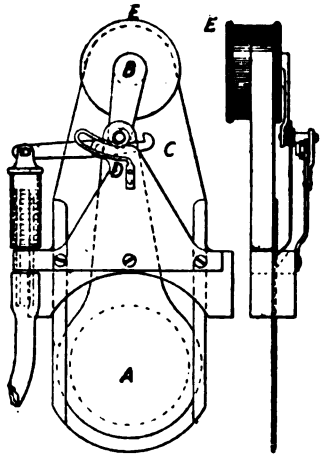

Shutters.—This shutter is made so that it can be inserted in the ordinary diaphragm slit of the lens. It consists of a slide A connected directly to a crank B. The slide is connected directly to the crank-pin, and is made of a circular shape so that the angular motion caused by the crank will not interfere with its up-and-down motion. The crank is held by a catch C, preferably actuated by a pneumatic arrangement, and when liberated the actuating-spring causes it to make one revolution till it is brought up against a spring stop D. The time of exposure may be varied by varying the tension of the actuating-spring E. Instead of the spring being adjustable, a dash-pot arrangement may be used.

5363. Lancaster, W. J. May 1.

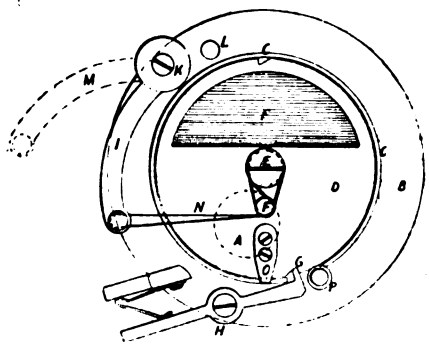

Shutters.—A cap in front of the lens has the central aperture A and carries a bracket plate B, having a ring C within which turns the plate D on the pin E. D has a segmental aperture F, which by notches G and the spring latch H may be kept in front of A for focussing or held aside ready for exposing. The arm I, where it turns on the pin K, has on its underside radial teeth, engaged by a spring detent at the back. Pressing the stud L pushes away the detent and allows I to be put into a position M, thereby stretching the elastic band or spring N. Then, on releasing D from the spring latch, it flies round and brings the aperture F instantaneously past A. A repetition is prevented by the finger O and stud P.

5364. Lancaster, W. J. May 1.

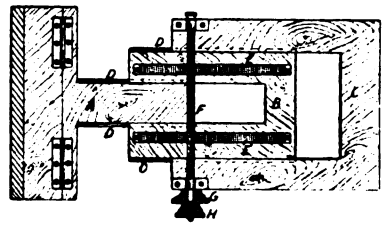

Cameras.—The baseboard of the camera is made in three parts A, B, and C, capable of sliding on one another by ribbed edges D and corresponding grooves. A carries the front or lens end of the camera. The fine adjustment is effected by the racks E and fluted rod F, which is square where it carries the milled head G for turning it. Accidental alteration is then prevented by screwing up the milled nut H. For inverting the camera, the top of the tripod carries a fixed board to which is hinged a board cut away and grooved somewhat similarly to C. This may either lie flat on the fixed board or be held vertically by catches, and into it is slid a tongued board fastened to the underside of the tailboard. The focussing-plate is attached to the back of the camera by folding hinges.

5523. Himly, H. May 5.

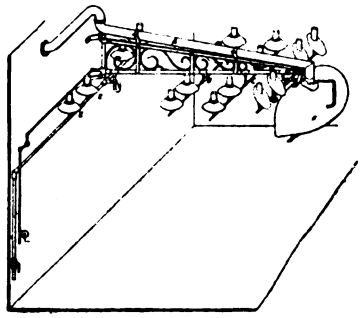

Lighting-arrangements.—Relates to an improvement on the invention described in Specification No. 11,556, A.D. 1884, direct lights being substituted for more powerful sources of light behind the screen. There is a principal source of light consisting of a Siemens regenerative burner, or a group of incandescent electric lamps carried on a

Digitized by Google

crane A. The reflector F has an irregular surface so as to spread the rays of light. The different secondary sources of light and their reflectors are supported by cross-beams B, C, D. The reflectors are so inclined that the whole mass of light is concentrated on the object to be photographed. A certain number of sources of light E are also placed about the background. The large semicircular reflector F on the end of the crane arm is intended to illuminate more or less the lower parts of the object to be photographed. More or less light is cut off in the large reflector by means of a movable double screen.

5677. Lancaster, W. J. May 8.

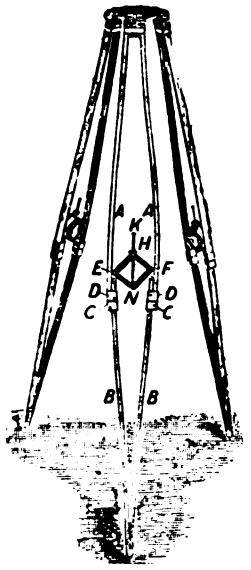

Tripod and like stands.—The parts A and B slide on each other by the sockets C and D. The tops of B carry, by short links, a couple of flat-bar parallelograms, hinged at E and F on roughened pins between the links, and at N and H to cross-pins. The screwed rod K is fastened to the cross-pin at N, and passes through a plain hole in that at H, above which it bears a milled nut. On screwing down this nut the parallelogram is extended, thereby causing A and B to be tightened together. A rack may be used instead of the screw K.

5725. Boult, A. J., [*Eastman, G.*, and *Walker, W. H.*]. May 9.

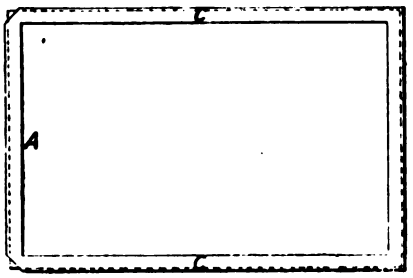

Change-boxes.—The object of the apparatus is to support a fabric or flexible sheet coated with sensitive film, for exposure in the camera. The edges of the sheet are pinched between two frames. The outer frame A is bent up round the edges, and curved inwards so that the spring of the sides keeps the inner frame C pressed down on the paper. The corners of A are cut away to allow the paper to be more easily lifted.

5909. Pass, E. de., [*Miron, A. S. J.*]. May 13. *Drawings to Specification.*

Photo-mechanical printing.—Relates to a process for producing copper-plate and relief engravings from photographs, drawings, objects, &c. A photo-relief is obtained in bichromated gelatine or other substance from the negative or drawing &c., and this relief is supported upon a perfectly-flat bearing plate and reproduced in line or grain upon a metal plate by a special engraving apparatus.

5938. Rouch, S. W. May 14.

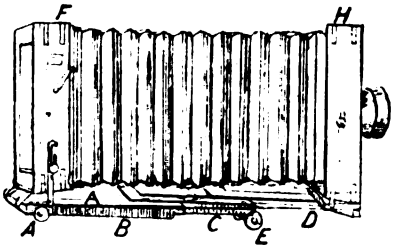

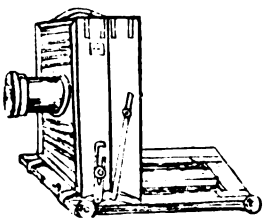

Cameras.—The tailboard, hinged at A so as to be capable of closing the back of the camera, consists of three parts B, C, and D, sliding one within the other. The innermost T-shaped piece D is moved in the second piece C by a rack and pinion worked on turning the milled head E; instead of the rack and pinion a screw may be used. The front and back of the camera are made interchangeable by having recesses in the frames F and H, into which other frames carrying either lens or screen may be inserted.

5965. Underwood, E., and **Underwood, T. A.** May 15.

Cameras; dark slides.—To obviate the necessity of removing the lens when the baseboard D is folded against the front, a hole is made in the baseboard for the lens C. On the underside of the baseboard is a flat circular ring F of metal held to the baseboard by any suitable attachments allowing it to revolve. To this ring the legs are

Digitized by Google

attached in the usual way. The dark slide has covers consisting of shallow trays the edges of which drop into grooves G, G round the edge of

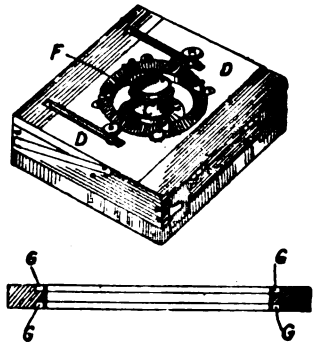

the frame, formed by strips of metal and rabbets in the frame. One side of the closing cover is formed as a hinge and turned from the outside.

5999. Mills, E. J. E., [*Denis, F.*]. May 15.

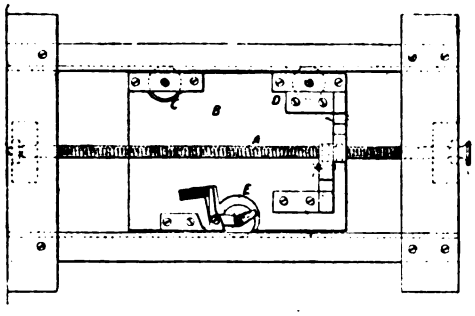

Cameras.—For focussing, instead of a rack and pinion a screw A with triangular threads is used and fixed so as not to have end play. The slide B carries a half-nut which may be disengaged by pressing a button below the camera. The slide is fitted with three friction-pulleys C, D, E, two on one side and one on the other. The single pulley E is pushed out by a spring.

6204. Lloyd, E. May 20.

Colouring; finishing.—The object is to decorate and preserve photographs on transparent substances by colouring the back, adding any other ornamentation by printing, etching, or engraving, and then applying a protective backing such as is described in Specification No. 1756, A.D. 1884, in connection with the decoration of glass surfaces. The backing consists in applying transparent varnish, gilding or silvering, and finally coating the whole back surface with varnish, thick red lead paint, or other protective backing.

6359. Le Moussu, E. C. May 23.

Photo-mechanical printing.—Relates to the production of relief printing-plates, reference being made to Specification No. 2474, A.D. 1873. A zinc plate is coated with a sensitive varnish, such as bitumen, exposed to light with the picture or drawing laid upon it, and developed and washed. It is then exposed to dilute acid, and after removing the bitumen the intaglio portions are filled with an alloy composed preferably of tin, lead, and bismuth. The whole is then subjected to the action of an acid for a short time, which attacks the zinc only. It is then rolled with a protective substance and again exposed to the acid, this operation being repeated as often as necessary. The plate has then the alloy left in relief to form the printing-surface.

6368. Robertson, J., and **Robertson, D.** May 23.

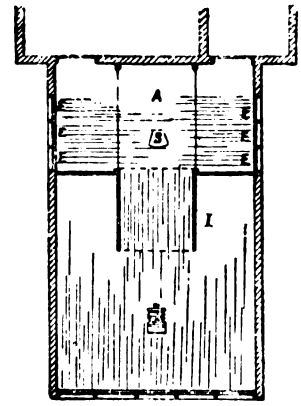

Lighting-arrangements; photo-mechanical printing.—Relates to obtaining photographic negatives or positives. The object B to be photographed is placed in an enclosed space A on all sides of which beams E, E of coloured light are admitted. In front of the object is projected a parallel beam of actinic light. The parallel beam of light is directed through a movable tunnel I placed in front of the object to be photographed, so as to gradually cut off the coloured light at the sides. The movement of the tunnel may be effected by the descent of a weight regulated by a fan. The object of this arrangement is to give the strongest lighting to the highest part of the relief. Plates to be printed in contact with these negatives or positives are prepared as follows:—1 oz. of gelatine is dissolved in water, and 40 grains of bichromate of potash is then added, and a few drops of glycerine. The plates, when set, are soaked in a trough of cold water to dissolve part of the bichromate out of the upper surfaces of the films, so that the film side next the glass will be more sensitive when the light gets weakest. Moulds, casts, or dies may be made from these films.

Digitized by Google

6973. Wells, C. June 8.

Producing bird's-eye views.—A camera A is fitted with as many lenses B, B, B as may be desired, each one focussing the scene below it at a different angle. The sensitized plate is inserted before the camera is raised. It may be raised by a balloon C, by a rocket, or a kite. The exposure is made by an instantaneous shutter, actuated by an electro-magnet connected to the earth by an electric wire, or by clockwork. The fall of the camera may be regulated by a parachute.

7422. Wells, C. June 18.

Cameras.—For the purpose of testing the accuracy of aim at moving objects when firing blank cartridge in ordnance drill, a photographic apparatus is attached to the piece with which the practice is being made, the plate of the camera being exposed at the instant of firing, and recording by a picture the relative position of the moving object with respect to the line of fire. The object glass has a series of fine wires crossing its field, one of the intersections of which is in the centre; or, otherwise, the plate itself may be marked before it is put in the camera. The instantaneous shutter is released by the act of pulling the lanyard.

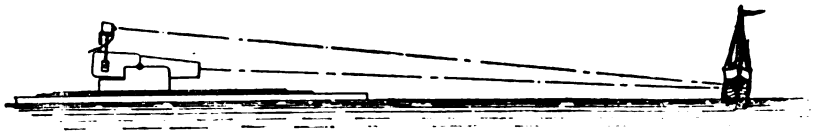

8313. Holroyde, J. B. July 9.

Dark slides; change-boxes; changing-bags; sensitized plates and films.—This slide is adapted to contain sensitive papers B, B to be placed on tablets or supports. To manipulate these plates a light-proof covering or bag, constructed to allow the insertion of both hands, is placed over the slide. The back of the slide falls down from the top, and serves as a ledge for the sensitive films while they are being manipulated. The bag is drawn over a ledge A, A or groove formed around the outside of the slide and held by an elastic band or draw-string. The bag may also be made to be used as a focussing-cloth, by having a flap at the bottom to button over and keep out the light. The supports for the sensitive films may be ferrotype, veneer, or other flexible light-proof material. The supports may be coated on both sides.

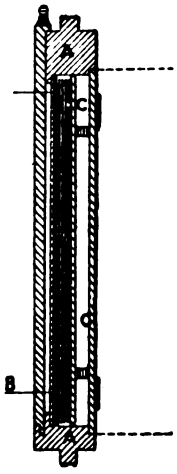

8722. McKellen, S. D. July 20. *Amended.*

Roller slides; cameras.—The apparatus consists of a casing A with discharging and receiving rollers B, C, off one and on to another of which the sensitive tissue passes. The paper in passing from one cylinder to another passes in front of an aperture D in the dark slide. There may be two such apertures. Before passing on to the receiving - roller the paper passes over a guide-roller E. On the end of the spindle of the guide-roller is a pinion F, gearing into a wheel G of such a size that it makes one

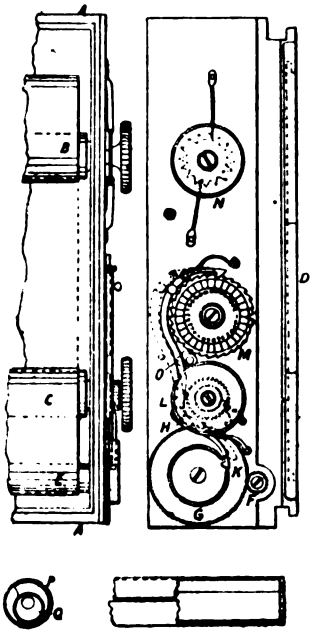

Digitized by Google

revolution during the passage of one section of the paper. At the end of each revolution the end of a lever H falls into a notch K on the wheel, and locks the receiving-roller by a click at L; it at the same time moves the recorder or counter M round one tooth. A backward tension is kept on the discharging-roller by the springs and star-wheel N. A translucent plate is attached to the sensitive tissue to act as a focussing-screen. A cam O is provided to throw all the clicks out of gear for convenience of winding or unwinding. A spring is attached to the underside of each shutter which shall draw a line, or make a series of punctures, at the end of each section. The dark slide may form part of the camera. The rollers consist of an outer tube P with a slit, and an inner tube Q which may be eccentric and by drawing round which the paper is fixed.

8748. Reddie, A. W. L., [*Sergeant, H. C.*]. July 20. *Drawings to Specification.*

Tripod and like stands for rock drills. The stands have hip-pieces at opposite sides between which extends a socket carrying the cylinder &c., and which have trunnion bearings for the said socket. The back leg is pivoted between the hip-pieces at their rear ends, while the front legs are pivoted to the front ends of the hip-pieces.

8917. Edwards, B. J. July 23.

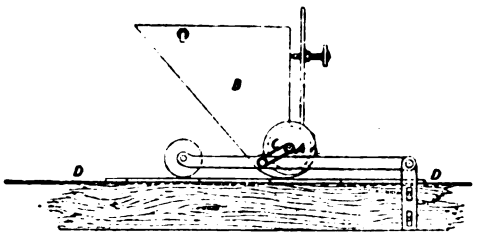

Sensitized plates and films.—Relates to a machine for coating plates with emulsion. The object is to regulate the flow of the emulsion on to the photographic plates. A tubular chamber A is used as a distributer and is connected by a flexible tube to the reservoir. The distributer is kept in contact with a hot-water tank B to keep the emulsion fluid, being kept in position by elastic bands C. Pistons fitting in each end of the distributer regulate the length of the slit to that of the plate. The plates are drawn under by an endless belt D, D.

8938. Durnford, C. D. July 24.

Printing. — Relates to a substitute for the printing-frame. A, B, C, D is the negative. The hinged back alone is used, and to each half of it is fastened by its centre a bent spring such as used in the ordinary printing-frame. To each end of these springs are hinged L-shaped pieces E, E, E which bend round the edges of the plates to press the negative with the paper on the back. The L-pieces where they come in contact with the glass are faced with india-rubber. F, H, K, G shows one half of the hinged back for examining the print.

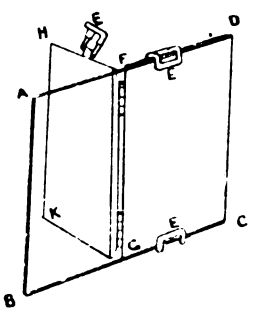

8971. Lancaster, W. J. July 25.

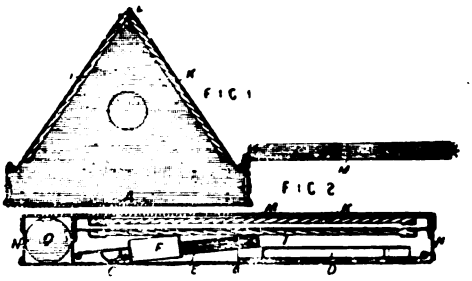

Lamps; lamp reflectors.—This lamp, which in shape resembles an oblong triangular prism, is so constructed that it can be folded up into a small compass when not in use. Fig. 1 shows a plan of the lamp when in use, and Fig. 2 a vertical section through the lamp when folded up in its case. The back A has hinged to it triangular pieces D and E which open to form the top and bottom of the lamp. E has an aperture F through which the candle is passed, other perforations covered by semicircular flutings C admitting air to support combustion. The top D has a perforated false bottom through which the products pass and finally escape by perforations in H. The glass sides I and K are hinged to the back, and K carries a yielding flange L which fits over the edge of I and together with the turned-up edges of D and E holds the glass sides in position. The interior of the lid M is burnished to form a reflector when open. The back A is produced and bent under at N to form a chamber in which a candle O can be packed. A vertical peg or foot is attached to the edge of one of the glass sides, and together with the back A and the lid M forms a secure base for the lamp.

9286. Morgan, W. T., and **Kidd, R. L.** Aug. 4. *Amended.*

Roller slides.—The casing has three rollers A, B, and C, one of which A is loose and can be inserted

Digitized by Google

from the top, and another B is a measuring-roller. On the axis of B is a disc D with a screw groove into which a peg is pressed by a spring. At the end of the groove the peg drops into a hole and

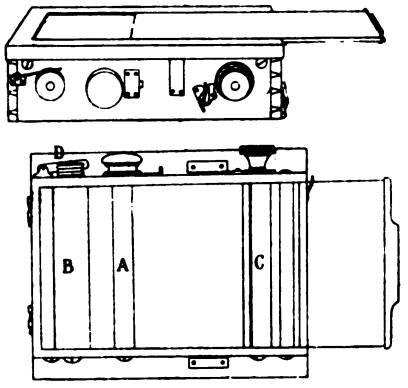

locks it. The receiving-roller C has a longitudinal slot for fixing the end of the paper. There is a thin screen between the rollers with a roller on either side to assist the passage of the paper. The screen is moved by eccentrics, and tightens and stretches the paper by forcing a bead on the frame into a groove in the screen. To mark the lengths exposed, when the shutter is closed spring points are pressed into and puncture the paper. To maintain the tension on the paper the friction between the store spool and its spindle, or a concave velvet surface to press the paper against the measuring-roller, is used.

9288. Pickard, E. E. Aug. 4.

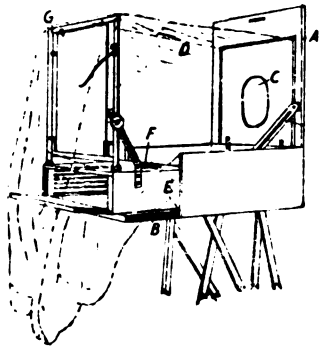

Cameras; change-boxes.—The camera consists of a flat rectangular box having its lid A and one end B hinged on it. The lid has a hole C for the lens. A bag of cloth or mackintosh D is attached to the inside of the camera and its lid, so that the lid forms one end of it. When the camera is closed the bag is folded up and shut inside it. The plates are pushed forward in the plate box E by triggers F. The plates are removed from the box and placed ready for exposure by the hands passed through sleeves under the cloth. A frame G is hinged to the plate box and is folded up to hold the focussing-plate.

9575. Woodbury, W. B., and **Vergara, F.** Aug. 11.

Sensitized films.—A thin even-textured paper is immersed for a sufficient time in a solution of certain gums (preferably gum dammar and gum elemi) in benzol. The sheets are taken out one by one and dried. They are then immersed for a short time in a solution of gelatine and again dried.

10,594. Gotz, J. R. Sept. 8.

Cameras.—The body A of the camera is connected to slides B running along the edges of the baseboard by short links C which are pivoted at one end and slotted at the other, where they are connected to the back or body.

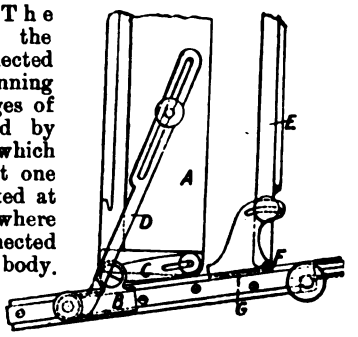

These links permit the camera back to receive a forward or backward inclination or a side swing. They also allow the camera body to be folded down on the baseboard, in which case the links become vertical. Another pair of long slotted links D clamp, by suitable set-screws, the body of the camera to the baseboard in any given position. The front E of the camera is secured by a hinge F to the front of a sliding frame which can be drawn out telescopically from the baseboard. The front can be set at any angle, or by wedge plates G may be fixed at different positions on the frame. To vary the position of the lens, it is mounted on a slide with an oblong opening which moves diametrically across a circular frame. A ring is screwed to the underside of the baseboard and forms a guide for the tripod top.

10,808. Trenemen, W. Sept. 12.

Colouring.—Unmounted paper photographs are immersed in a solution consisting of spermaceti wax, colza or other oil, and Canada balsam. The prints are soaked in this at a temperature of 100°-180° F. till they are perfectly transparent. After the medium has cooled the prints are removed and superfluous matter removed by the squeegee. The prints should then be immersed one at a time in a solution containing less oil and more Canada balsam. The solution is raised to 120° F., and the prints are kept in solution at this heat for two hours, at the end of which time they are withdrawn and the superfluous medium is removed. The back of the print is varnished and the colours applied. A layer of tinfoil previously coated with white paint is placed over the colours. The transparent medium may be applied to prints mounted face towards the glass. The colours are

Digitized by Google

reground with Canada balsam and gum dammar varnish. The colours should be laid on in two coats.

10,896. Durnford, C. D. Sept. 15.

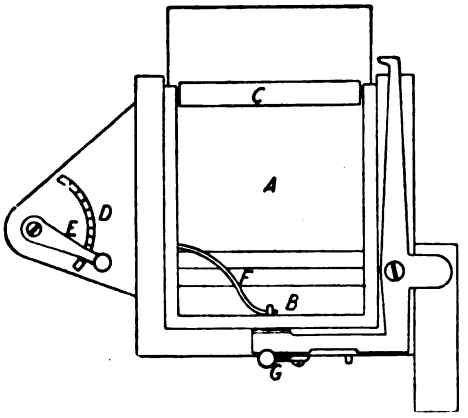

Shutters.—The frame of the shutter has in it two grooves, one at the front and the other at the back. The shutter itself consists of a rigid portion A, and a flexible portion B. This shutter is actuated by a spiral spring placed in a casing at one side of the frame, the end F being attached to the flexible extension. The tension of the spring can be altered by an arm E outside. When the shutter is to be set ready for exposure, the rigid part is pulled down into the front set of grooves and held by a catch G, the flexible part being bent over the roller C at the top. On removing the catch by a pneumatic or other arrangement the rigid part flies up, and the flexible portion descends in the back grooves till it assumes the position shown and recovers the lens aperture. For longer exposures the tension of the spring is reduced and the shutter is stopped in the exposed position by the other end of the catch lever.

11,020. Anderson, A. Sept. 17.

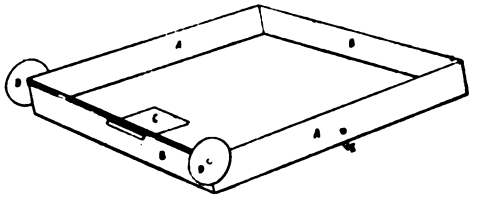

Trays; lifters or holders for plates.—The sides A, A and ends B, B of the tray are at right-angles to the bottom. At one end a lever C is fixed which passes under the end of the plates and lifts them out of the bath. The lever may be actuated by another lever or by an axis with milled heads D, D. To enable the bath to rock, a bar or points E are fixed across the bottom of the tray.

11,055. Clark, A. M. Sept 17.

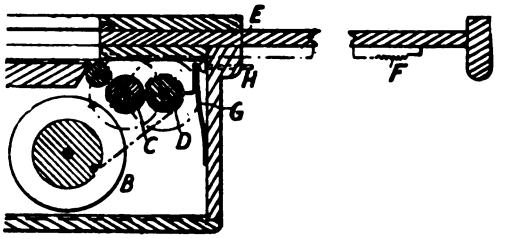

Roller slides.—In this slide the feed of the paper or film is effected by the motion of the shutter of the slide. The discharging-spool B and a receiving-spool at the opposite end of the slide are connected by a belt passing over pulleys on the ends of their axes, the diameters of the pulleys being such that the paper is always kept in tension by the slipping of the belt. Motion is communicated to the paper strip from the shutter by the two rollers C and D. These are actuated alternately with the in and out stroke of the shutter E by the two racks F fixed on it. By means of ratchet gear only one rack at a time is driving, the other running loose. G is a spring for perforating the paper by forcing points into the roller D when the cross end of the shutter strikes against the stud H at the end of the stroke. In other modifications, the paper strip is fed directly by the shutter by a roller or perforating-clip grasping the paper and carrying it along with the shutter in one direction.

11,386. Park, H. Sept. 24.

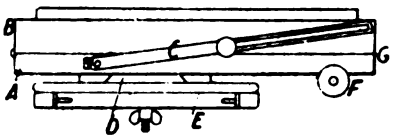

Cameras.—The back B is hinged to the base A, and may be fixed vertically or otherwise by the slotted bar and screw C. The base is screwed to a dovetailed wedge-shaped plate D fitting between two plates upon the disc E which carries the fixing-screw. When the disc is screwed to the tripod head it bends slightly, so as to hold the plate D firmly. In the base is a sliding extending frame, adjustable by rack and pinion F. A brass frame which supports the lens plate is slotted so as to be easily secured in position by a screw and thumb-nut on the end of the extending frame. The lens plate is adjustably fixed by thumb-screws passing through slots in the sides of the brass frame. The bellows are pyramidal; a spring G holds the front and base together when closed.

11,446. Hulbert, O. L. Sept. 25.

Reducing; printing.—Relates to a method of producing sheets containing a number of facsimile photographs. The Figure shows a part of

Digitized by Google

one of the sheets containing thirty-five pictures (or blanks), three of the pictures being shown. The pictures are reduced (by apparatus not described or claimed) from a single large photograph, at one

operation. They are subsequently printed on the sheet, and separated by perforations like postage stamps.

11,959. Dollond, A. W. Oct. 8.

Tripod and like stands. — The legs of the tripod stand are divided by a medial line A A along their length, and also into lengths by transverse divisions B, C. Each of these parts is connected by hinges in such a way that when the legs are flat they may be folded at the cross hinges. When, however, the legs are extended they may be folded lengthwise so as to assume an angular form, and the cross hinges becoming by this means fixed the legs are rigid. The legs are connected to a triangular top; they are clamped in the proper position by a hooked bar hinged to one side. Pointed pieces of metal are fitted to the lower ends of the bars.

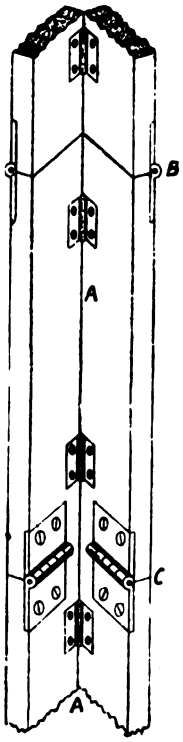

12,227. Griffiths, W. Oct. 14.

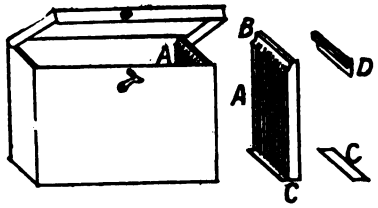

Plate boxes.—The ends A, A are formed of wood with vertical grooves and are hollowed out at the top to expose the corners of the plates for the purpose of lifting out. They have strips C along the bottom and bent metal strips D for strengthening them at the top. The rest of the box is made of cardboard, millboard, or the like.

12,425. Nicholson, A. Oct. 17.

Tripod and like stands. —Relates to portable stands for reading-desks, cameras, &c. The folding desk &c. is carried by a three-claw arrangement which may be removably attached to the male part of a ball-and-socket joint, tightened by a screw collar at the top of a telescopic standard. The lower end of the standard has a plug with three flat projections A, to which are jointed the flat parts B of plugs in the top of the legs. The projections A form stops to prevent the legs from folding inwards, and they may be prevented from moving in the opposite direction by projections on the locking-collar C bearing against the ends of the parts B. A pin D limits the motion of the collar and a knob E serves as a handle.

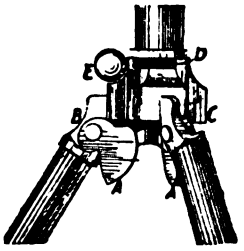

12,870. Rawlinson, W. Oct. 27.

Cameras.—The base of the camera is a metal plate A, hinged near its end, the parts carrying slotted quadrants in pairs adjustably bolted together as shown, by which the back may be tilted. The body is secured by two screws B passed into it through slots in the base. The front part of the base carries guides C, between which is a sliding plate carrying a bracket upon which the lens plate is adjustably held by a single screw bolt in slots. The body consists of a metal cylinder E with a projecting inner flange, within which is a revoluble wooden ring D held by a metal ring F on the inner side of the flange. The ring D may be fixed in any position by tightening the bolt G, compressing the ring F on the flange. The ring D carries a metal plate, behind which is a wooden frame H, upon which the focussing-screen I is held by a double hinge and catch. The aperture in the frame H is of such size as to receive the dark slide, which is

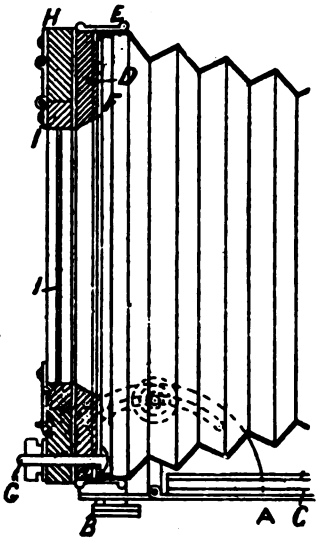

Digitized by Google

secured in position by turning down the focussing-screen upon the back, and fixing it by the catches. The bellows is cylindrical or conical and corrugated circularly or helically, its ends being secured between metal rings or flanges.

12,972. Boult, A. J., [*Eastman, G.*]. Oct. 28.

Roller slides.—The object is to indicate on the outside of the case the position of the film. In order to do this the motion of the index is reduced by "Geneva stop" or toothed gear so as to make one revolution for, say, four of the measuring-roller over which the paper passes. A is the end of the knob, which is fitted on the square end of the slowly-rotating axis. On this knob is a mark or index the position of which is noted with reference to the fixed scale B. One revolution of the knob corresponds to the transfer of the length of the paper required for one negative.

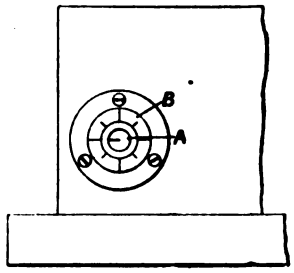

13,261. Clark, A. M., [*Anthony & Co., E. & H. T.*]. Nov. 3.

Roller slides.—The receiving and discharging reels are placed in separate boxes A and B, which can be separately removed from the frame of the slide for filling in or removing the paper. Projecting pieces C with inclined ends are fixed at the sides of the frame and hold the boxes in position when the back D is closed. To the back D is fixed a flat support E for the sheet of tissue as it passes from one roller to the other. An independently-rotating ratchet-wheel is connected to the take-up roller by inserting a key. Between the two reels is an indicating-roller which is pressed against the paper by a spring, and is provided with a pricker to divide the tissue into suitable lengths.

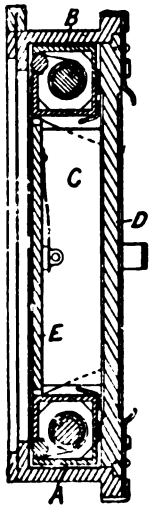

13,262. Clark, A. M., [*Anthony & Co., E. & H. T.*]. Nov. 3.

Receptacles for printing-paper; roller slides.—Consists of a light-tight box A having a light-tight passage or slot B for the movement of the sheet in and out of the box. The slot through which the paper passes is made light-tight by a flap C pressing the paper down on a roller D which is trapped on the other side by a double wiper E. Inside the box is a roller or reel F on which the paper is wound, and which can be actuated from the outside. To check the turning of the roller, spring washers are introduced at the end of the case to produce endwise pressure. A hinged lid fits light-tight between the ends of the case. There is a slit C with teeth in the reel to fix the end of the sensitive paper.

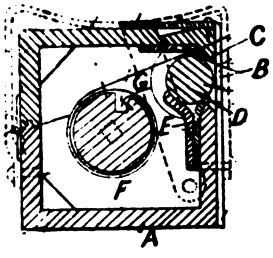

13,463. Coventry, A. Nov. 6.

Sensitized plates and films.—Relates to means for coating dry plates. The plates to be coated are clamped in line on a levelled frame A. A carriage fitted up to discharge emulsion on the plates is traversed along the line of plates, either by a handle B which actuates its wheels C or by being pulled by a cord. The emulsion is first placed in a trough D

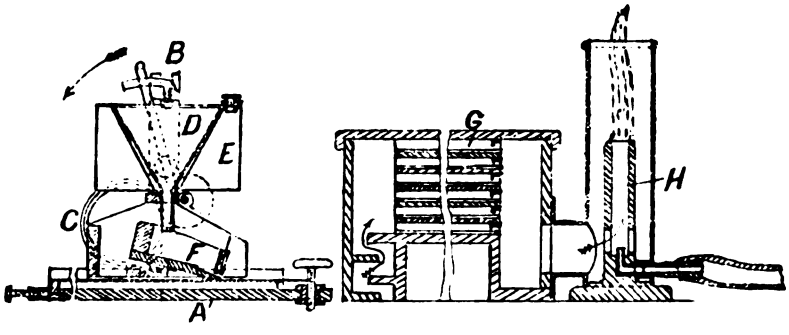

Digitized by Google

surrounded by a water jacket E. By raising a plug automatically in the bottom of the trough D the emulsion is discharged into another trough F which has the discharging-slit at one end. This trough can be tilted up so as to stop the flow. After one series of plates is coated the board is removed to a drying-chamber G, and another charged with clean plates substituted for it. The drying-chamber is stacked full of these boards with plates. The draught in the chamber is produced by a lamp or burner H.

13,956. Billcliff, J. Nov. 16.

Cameras; dark slides.—Relates to an arrangement fitted to the back of the camera by which the slide which contains the sensitive plate may be rotated through a right-angle, from a vertical to a horizontal position or *vice versâ*, without moving the camera. A circular opening, the edges A, A of which are flanged or rabbeted, is cut in the back B, B of the camera. On the plate holder are fixed corresponding flanged or rabbeted pieces C, C which fit into those on the back so as to bind them together. These latter rabbeted pieces may be those cut from the hole in the back reversed.

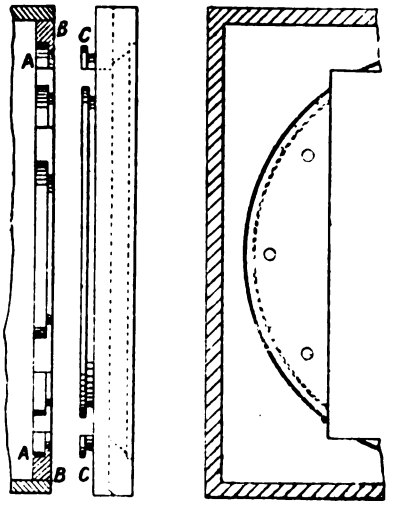

14,205. Ashford, J. Nov. 20.

Tripod and like stands.—Each leg of the tripod stand consists of two parts A and B sliding one within the other. The lower part A has fixed to the top of it two cross-pieces or cheeks C, C, by tightening which with a screw the lower half may be clamped in any position. Each leg is connected to the triangular top at three points, viz., a central point D by a bolt and ear, and two side points E and F by centres against which strips are forced out by struts G, G.

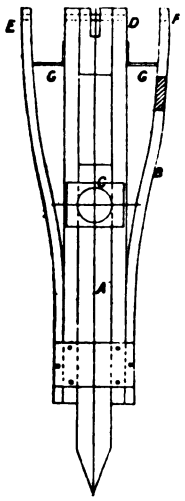

14,239. Stanbury, C. H. Nov. 20.

Dark rooms.—A portable dark room A for photographic purposes is constructed after the design of an ordinary umbrella, but having the outer extremities of the ribs B bending down somewhat more. Besides the covering over the ribs the bottom is closed in by a circular sheet. The central stick is of such a length as to allow the runner to be slid over its end and fixed. Sleeves D

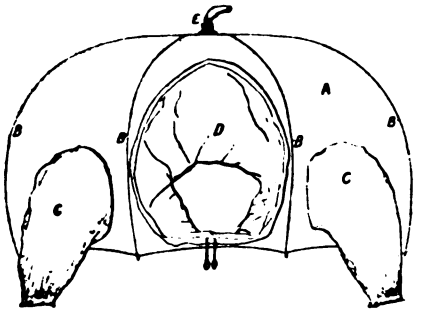

and C, C are made between the ribs for the reception of the head and arms of the operator. Part of the covering consists of red and yellow fabric to admit light for operating. A flexible tube E having a tap on the inside end passes down through the top of the umbrella to admit water for washing.

14,468. Bolas, T. Nov. 25.

Ornamenting by photography; sensitized plates and films.—A tissue is prepared by dissolving gelatine in water with the addition of gum, sugar, and of

Digitized by Google

a metallic vitrifiable pigment, and spreading a thin layer thereof over paper. The coating is then sensitized with a solution of soluble bichromate, and a picture produced by exposure in the usual way. The exposed tissue is then immersed in water till soft and pliable, when it is placed face downwards on glass, metal, stone, pottery, enamel, asbestos slabs or sheets, or other fire-resisting body to be ornamented, and gently pressed down closely thereupon by means of a squeegee, if the surface is flat, or a counter-mould, if irregular. The paper backing and soluble gelatine are then washed off with warm water, and the surface treated further, if necessary, with a vitrifiable metallic powder by dusting or otherwise, and finally fired so that the gelatine is burned off, and the design left in the vitrified pigment.

14,867. Vœring, O. Dec. 3.

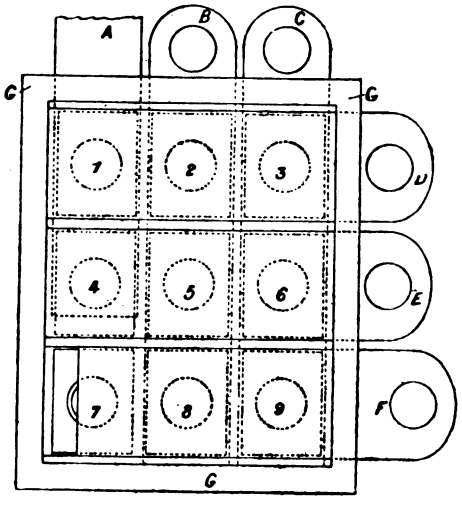

Cameras; dark slides.—This camera is designed to take several photographs on the same plate by exposing each section of the plate separately while the other parts are covered. The back of the camera is provided with an inner open frame G which is divided into as many sections, 1-9, as there are objectives. In the frame are fitted three vertical slides A, B, C and three horizontal slides D, E, F. To uncover any particular section the two slides which cover it are drawn out.

14,957. Abel, C. D., [*Fabrik Chemischer Produkte Aktien Gesellschaft*]. Dec. 5.

Emulsions, making.—Relates to improvements on the processes described in Specification No. 4992, A.D. 1882, in which an emulsion is formed from wool grease by addition of alkali, and the fat then separated by centrifugal action. Instead of using alkali to form an emulsion, amine compounds, alkaline borates, silicates, or bicarbonates, vegetable substances containing saponin, pancreatin, &c. may be employed. The fat may also be separated from the emulsion by subsidence, dilution, or addition of alkaline-earth salts; in the latter case useful soaps are obtained.

15,162. Mold, G. Dec. 10.

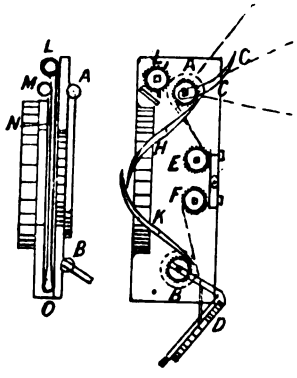

Shutters. — Consists of a combination of a flap and band shutter. A and B are the axes of the flaps C and D. The flaps are actuated by elastic bands, the tension of which is regulated by the axes E and F. The arm G on the axis A of the flap C rotates as the flap rises, until it strikes the arm H, which actuates the arm K and liberates the axis B of the flap D. This flap D is hinged and can be folded back to extend the exposure. Combined with this flap shutter is a band N passing over rollers M, O, and L. This band is started by the arm G striking a catch on the axis of L. Rims are made on the flap shutters.

15,376. Robinson, A. Dec. 15.

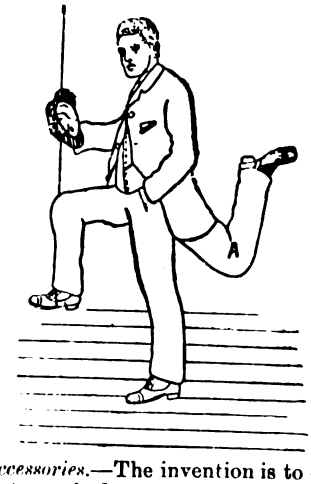

Studio accessories.—The invention is to enable the person photographed to resemble the arms of the Isle of Man. It consists of a light artificial leg A, attached to the person so as to appear as a third leg. The leg is to be dressed to suit the dress of the person photographed.

Digitized by Google

15,629. Shirtcliff, W. J. Dec. 19.

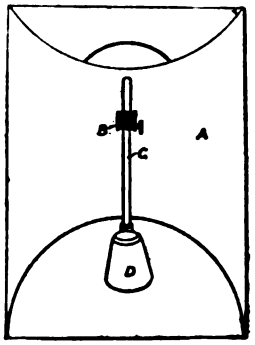

Lamps, magnesium, for photography. Magnesium wire is employed and is burnt in an apparatus fitted with a reflector A, igniter, &c. The wire is cut into short pieces which are held by a clamp B capable of being slid up and down a vertical rod C to any required height so as to be in the focus of the reflector. The wire is held over an inverted funnel D, below which the lighter is introduced. The lighter consists of a metal cup attached to the end of a swinging arm. The arm is pulled to one side for the purpose of igniting the spirit with which the cup is charged, and is held in this position by a latch, which when removed allows the cup to be drawn under the concentrating-funnel by a spring or weight, and thus ignite the magnesium wire.

15,747. Durnford, C. D. Dec. 22.

Shutters.—A is a frame put in front of the lens and having a circular aperture hidden by the shutter B. C, C are strips meeting the frame at the bottom but far enough from it at the top to allow the shutter B to turn over. Elastic bands D, D pass through the apertures F, F and over pulleys at the back of the frame A, up to the pin H, by turning which the tension is determined. On releasing

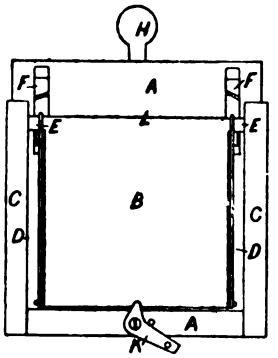

the shutter from the hold of the catch K, these elastic bands pull the edge L into a groove running across the frame A, turn the shutter over, and draw it down again with the lugs E, E at the bottom.

16,078. Dallas, D. C. Dec. 31.

Photo-mechanical printing. — Elastic printing-surfaces are made of vulcanized india-rubber or other flexible or elastic material, and are produced from "clichés" or originals engraved or prepared by photographic means.

A.D. 1886.

167. Fantini, P. V., and **Muir, S. J.** Jan. 5.

Lamps for taking photographs by artificial light. The pan containing the illuminating-powder is supported by an arm A which slides vertically upon a rod B secured in the glass casing C. The powder may be ignited by the gas jet D or by electricity. Additional gas jets are placed beneath the casing C to increase the draught, and the products ascend by the glass chimney E to the flue H. A similar lamp is placed at the opposite side of the studio, and the common products escape by pipes in communication with a vertical uptake, which is closed at the top to prevent downdraughts. Either side of the sitter can be taken by adjusting the calico blinds which replace the usual mirrors.

(*For Drawing see next page.*)

Digitized by Google

167.

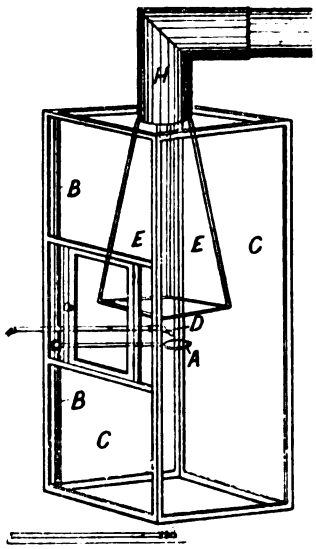

358. Lawless, D. Jan. 9.

Ornamenting by photography.—The object is to produce photographs, pictures, or other designs on tiles or other objects of pottery ware, or on glass or metal surfaces. A mould is produced into which the material is pressed. The mould is taken by electrotyping or otherwise from a gelatine relief. After the object has been moulded it is glazed with a coloured glaze which is more or less transparent. To produce the mould, bichromated gelatine is exposed under a negative and then soaked in water, when parts protected from light swell up. The gelatine relief may also be produced by the "Stanotype process." In place of gelatine alone a mixture of gelatine and sugar may be used.

899. McKellen, S. D. Jan. 20.

Tripod and like stands.—The object is to facilitate the folding and erecting of tripod stands. This is effected by a clamp consisting of a strap A which is tightened by folding down an eccentric-headed lever B.

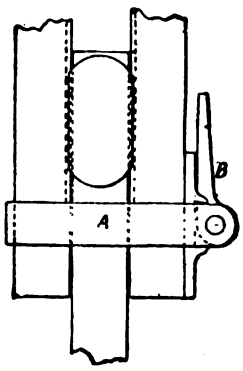

912. Hazeldine, F. Jan. 20.

Washing plates. The apparatus consists of a trough A fitted with a self-starting draw-off siphon B drawing from near the bottom of the trough. An air-hole at C prevents the level of the water from falling below any desired point. The trough

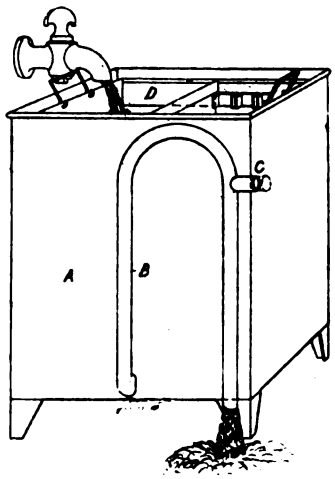

contains an inner removable frame or rack adjustable to suit plates of different sizes, the plates being inclined so as to rest on their arrisses. The plates are supported film side downwards.

913. McKellen, S. D. Jan. 20.

Roller slides.—In order to carry a greater length of the sensitive film in a given space, the tissue is wound over the outside of two rollers A and B. The tissue is then carried over the support C, the guide-roller D, and finally on to the receiving-roller E. The frame of the rollers A is hinged at F, to tighten the film by straightening out, after being wound in the bent position.

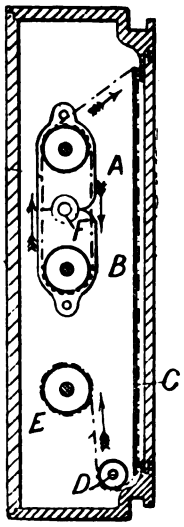

1365. Forrest, T. Jan. 30.

Shutters.—In the inside of a vertical frame A are cut two sets of grooves in which the plates or shutters D and C slide up and down. The shutters are separated by a partition B, and are connected by cords E passing over the tops of the partition, so that when one plate is at the bottom covering the lens aperture the other is at the top. The top plate C is made heavier than the bottom plate so

Digitized by Google

that when liberated by the catch F it descends, actuating both plates. When necessary, the speed

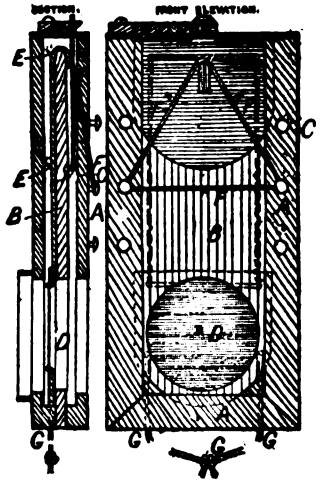

of the descending plate is accelerated by weights or a spring. The shutter is set by pulling down the lighter shutter by cords G, G at the bottom of the frame.

1432. Moore, F. C. Feb. 1.

Shutters. — This shutter consists of a combination of a flap A and a drop slide B. The flap is kept closed by a bent piece C on the end of the drop which liberates the flap when the drop has moved down a short distance. The flap is then raised by the india-rubber band D which is wound on the barrel E on the axis of the flap. The slide B is allowed to drop by withdrawing the end of a pneumatic piston-rod F from under a stop G on the slide. The slide falls sufficiently to liberate the flap, when it is stopped by another peg H striking the end of the piston-rod. After the exposure has been continued for any required length of time, the drop is allowed to fall by reversing the motion of the pneumatic piston.

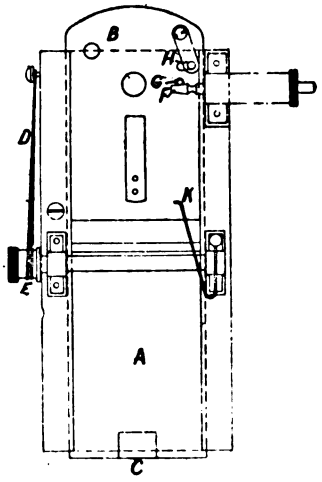

1675. Rayment, A. Feb. 4.

Cameras.—Relates to a method of fixing the front of a camera with tapering bellows to the baseboard. Two rods A, A screwed at the top and fitted with nuts B, B pass down through the sides of the front, and are attached at the bottom

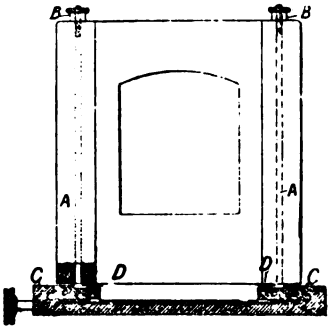

to pieces C, C which clamp the plates D, D fixed on the slides. The latter are moved by rack and pinion in the usual manner.

2039. Lucas, H. Feb. 12.

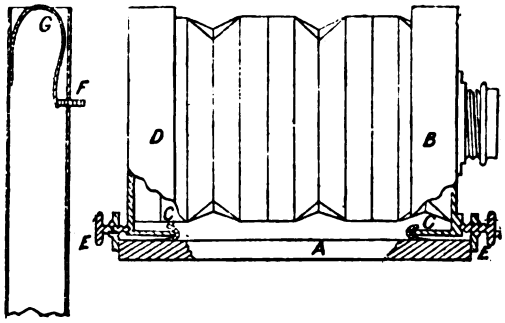

Cameras.—The camera is made wholly or partly of metal with the ordinary bellows body and a loose base A. B is the front and D the back of the camera. The camera is fixed to the base by forcing the edges of plates on the front and back into cross-grooves C, C by screws E, E.

Tripod and like stands.—Relates to a method of clamping the telescopic parts of the legs of the stand. This may be done by forcing a ferrule with saw cuts into a conical nut, or by a tongue piece F pressed out through a slot by a spring G.

2068. Geofroy, L., and **Massey-Mainwaring, W. F. B.** Feb. 12.

Cameras; lenses.—Consists of a binocular camera arranged to produce one image on the sensitive plate. The two pictures being slightly dissimilar give the impression of relief. Several methods are employed of producing the desired effect. Thus, the back lenses of stereoscopic cameras are formed so that their last surfaces are prismatic, in sufficient degree to cause the images to coincide on the sensitive plate. Or separate lenticular prisms may be placed a short distance behind the lenses as shown above. A, A are the lenses, and B, B the lenticular prisms placed behind the lenses to converge the

Digitized by Google

image on the sensitive plate C. The two images may be obtained by using different parts of a large

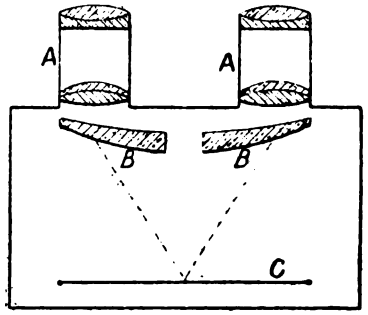

single meniscus lens, by covering it with a diaphragm having openings situated a distance apart equal to the distance of the human eyes. The images may also be converged by reflectors.

2365. Durnford, C. D. Feb. 18.

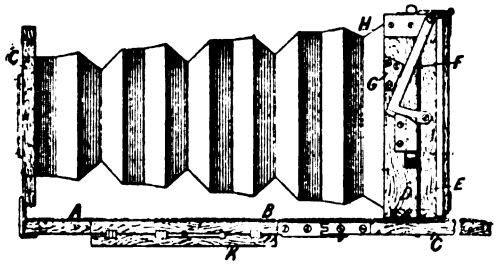

Cameras.—The baseboard of the camera is in two parts, A and B, which are hinged together and fixed in line by bolts sliding in suitable sockets. To extend the baseboard, racks are fitted on extension pieces C which are hinged to fold alongside of the baseboard when the camera is folded up. To allow for swing, the back is constructed of two frames D, E which are connected by L-shaped levers F, one end of which is pivoted to one of the frames, and the other to the other frame. The levers may be clamped in any given position by a tail-piece G or other suitable means. The folds H of the bellows towards the back part are made shallow to do away with the necessity of using a large back frame. The camera baseboard is hinged to one side of the tripod top at K and fixed by a bolt to another. The camera can be turned round on the hinge and fixed by a stay in any required position. To permit of adjustment of position in other directions the camera may be mounted on a turntable.

2384. Durnford, C. D. Feb. 18.

Shutters.—This shutter is adapted to produce long or short instantaneous exposures. The shutter is preferably inserted between the lenses and from the side instead of the top of the lens tube. The shutter A for long exposures is liberated and stopped at the full open position by a double catch B which catches successively in

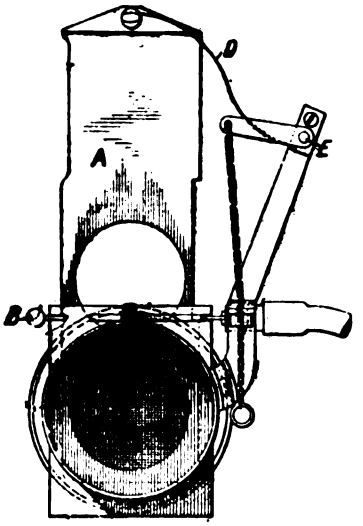

notches in opposite sides of the shutter. For instantaneous exposures a single T-shaped catch is used. The shutter may be actuated by a spring D wound round a pivot E, by turning round which the tension is regulated; or elastic bands may be used passing round the lens tube and the top of the shutter. To produce a double exposure a large and small aperture are made in the shutter; the one aperture may be joined to the other. By double catches acting upon notches in the shutter the large and small apertures may be successively brought in front of the lens.

2390. Vergara, F. J. Feb. 18.

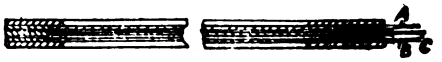

Dark slides; sensitized films.—The dark slide is intended to hold sensitive films or flexible sensitive surfaces. The frame is made of wood, ebonite, or other suitable material. There are two shutters A, B so that, by inverting, an exposure may be made from either side. A piece of flexible film, of length sufficient to take two photographs, is doubled at the centre over a thin central partition C, which is afterwards inserted with the sensitive paper on each side, into the dark slide.

2423. Rayment, A. Feb. 19.

Camera stands or supports; tripod and like stands.—The top of a tripod or other stand or support is constructed to enable the camera to be tilted

Digitized by Google

through any required angle. A board A on which the camera is fixed is hinged on one side at B to another board C fixed on the tripod top. The board A is supported in any position by a stay rod D on the end of which is a nut E actuated by the screw F. The board A can thus be set at any angle by moving the nut E. In order to keep the centre of gravity of the camera over the tripod stand, the part C is made to slide transversely on the part G attached directly to the tripod top.

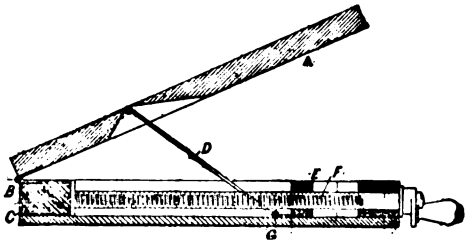

2495. Eskell, C. A. Feb. 20.

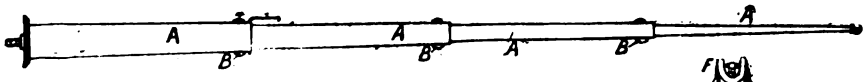

Tripod and like stands.—Each leg of the tripod consists of two or more triangular pieces A, A, which telescope one into another. When the legs are drawn out to their full extent, tongue-pieces B, B are forced out by springs into slots in the tube and fix the respective pieces in place. The head is also constructed to be collapsable. Three radial arms C, C, C are connected to a central boss D by hinged joints. Hinged stay rods E, E, E are connected to the ends of the radial arms, keeping them apart, and giving a broader support to the camera. The legs are attached to forked ends F, F, F of radial arms by pivots. When a leg has been shut up a hinged clip cap is folded over it.

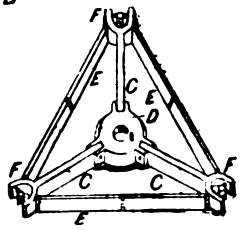

2670. Thornton, J. B. Feb. 24.

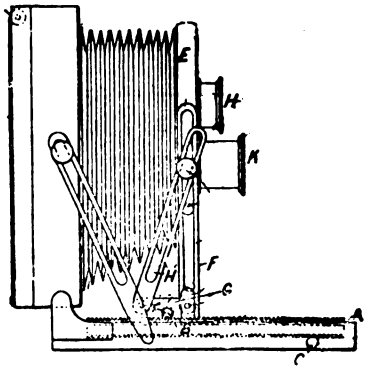

Cameras.—The object is to make the camera with all necessary adjustments light, and folding into compact form. A telescopic baseboard is used to suit long and short focus lenses. On the extension board are fixed racks A with teeth on both sides, in each of which focussing-pinions B and C gear. The pinions may be pressed out of gear for rapid adjustment. The front of the camera E is supported on forks F which are attached to sliding plates G at the bottom. Slots in the fork allow the front to be raised and lowered, and slotted struts H fix the fork in position. Studs on the ends of the fork rods fit into holes in flat springs on the sliding plates. A number of lenses H, K are fixed in a revolving panel in the front board, so that any required lens may be brought into position. For packing, the front board is placed on the baseboard with the lenses uppermost so as to back inside the bellows. For a focussing-glass a flexible translucent material is used, which winds on a spring roller at one side.

2811. Stanley, W. F. Feb. 26.

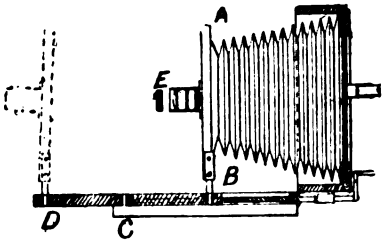

Cameras.—The object is to facilitate focussing. The front board A has studs B which can be set in sockets C, D at different parts of the baseboard. To alter the size of the image a lens E in a ring can be fitted into the hood of the lens. A hole is cut in the focussing-glass in which is fitted an eye-piece, which is focussed to an arrow on clear glass in contact with the surface of the ground glass. The final focussing is effected by a screw.

2876. Payne-Gallwey, W. H. Feb. 27.

Cameras; change-boxes.—Comprises a camera, finder, and change-box. The camera A is of the usual kind, with a shutter in front of the sensitive plate consisting of two flaps, one of which is horizontal while the other is vertical, their movements being regulated by a cam and quadrant.

Digitized by Google

B is the finding or focussing camera, which has a lens exactly similar and is focussed simultaneously by

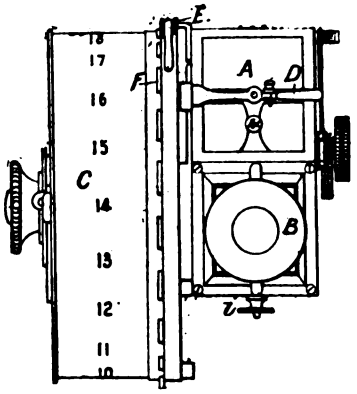

the same milled head. C is the cylindrical change-box, in which the plates are arranged in such a tangential radial position that by the rotation of the box on its axis the plates are brought into the proper position to slide from the change-box through a slide into the dark slide of the camera A. The slide closing the aperture or slot for the transfer of plates is opened by pressing on the end of the lever D. The plates are moved from the camera to the change-box, or *vice-versâ*, by tilting the apparatus. The change-box is turned round in steps corresponding to the position of the plates by means of the catch E and the projection F.

3061. Thwaite, B. H. March 4.

Developing.—Relates to a developing-bath. This bath is particularly adapted for developing prints obtained from engineers' drawings by the heliographic process. It consists of a narrow vertical trough A containing the developing-solution and large enough to allow the prints to be suspended in it from a glass rod B running along the top. After the development is complete the sheets are hung on ledges C to drain into troughs D, D. In processes where more than one solution is used, the trough may be made with two or three compartments. The printing-frame may be fixed over the trough.

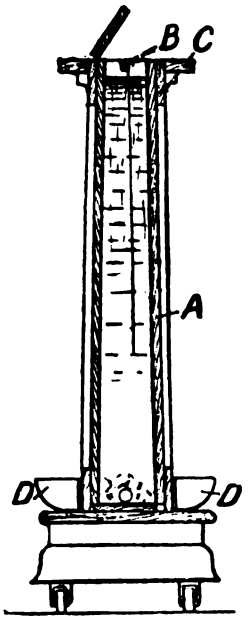

3269. Morgan, W. T., and Kidd, R. L. March 9.

Stretching-appliances for paper, films, and the like.—Round the outer edge of a frame A are hinged flaps B, B, the inner edges of which are bent down. The sheet of paper to be stretched is placed on the frame A, and the flaps B, B are folded down upon it. The edges of the paper are held by indentations on the inner surface of the flaps B, B, or by burrs on the holes E projecting into holes D. The bent-down edges of the flaps B, B, by pressing on the paper and depressing it, stretch it perfectly flat.

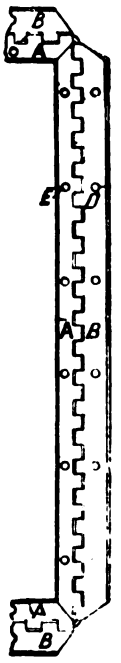

3325. Hazeldine, F. March 9.

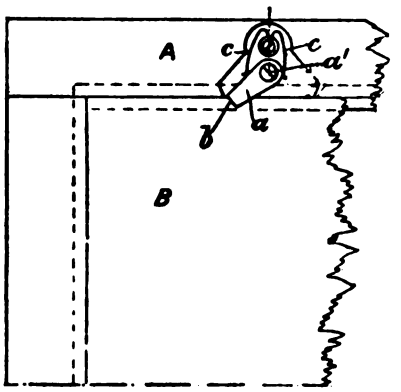

Dark slides.—Consists in the application of a detent which will show when the plate has been exposed, and prevent the shutter from being withdrawn by locking it after the exposure has been made. A is the frame of the slide and B is the shutter; *a* is the detent which catches in a notch *b* in the edge of the shutter. The detent *a* may be turned to either side of its axis a^1, being pressed down in either position by a U-shaped spring *c*, *c*. The detent is set by turning it to the right side of the axis, in which position it allows the shutter to be withdrawn and shows that the plate has not been exposed. On withdrawing the shutter for exposure and pushing it back again the detent is

Digitized by Google

turned to the left of its axis, drops into the notch *b*, and locks it when the shutter has been pushed home. A modified arrangement with a hooked detent on the end of the frame is described and illustrated in the Specification.

3466. Blackie, A. March 11.

Emulsions, making.—In preparing emulsions of animal or vegetable oils and of other substances, such as chloroform, a solution of isinglass, size, &c., and of alkaline phosphates, carbonates, or other salts is incorporated by agitation or otherwise with the oil. In the case of mineral oils the size solution is mixed with soap or soap substitutes. When solid paraffins, waxes, &c. are to be emulsified the solutions are heated. Emulsions for any ordinary purposes are prepared as above; in the case of emulsions for destroying animal and vegetable parasites, sulphur dissolved in an alkaline sulphide, or arsenic dissolved in glycerine may be added.

3879. Lancaster, W. J., [*trading as* J. Lancaster & Son]. March 19. *Amended.*

Lens fittings.—Relates to a lens diaphragm which is capable of being adjusted to any size of opening within certain limits. The diaphragm is made up of a number of sections c^2 which overlap each other, and the inner ends of which are curved so as to form an approximately-circular opening. In the arrangement shown, each section has two pivots on opposite sides, such as c^4 and c^5. The former turns in a plate d^2 fixed inside the lens tube *a*, and the latter fits in an inclined slot in a movable disc *e* which is turned by rotating the front part of the lens tube *f*. The rotation of *e* causes the inner ends of the sections c^2 to approach to or recede from the centre, and to enlarge or diminish the opening in the diaphragm. Instead of being hinged, the sections may slide radially.

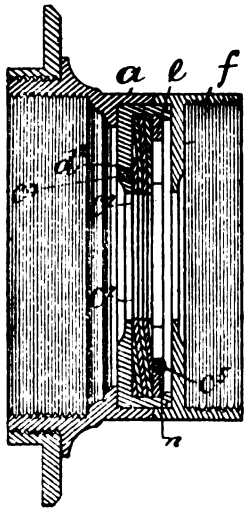

4179. Williams, J. D. March 25.

Cameras.—To facilitate the substitution of the dark slide for the focussing-glass, both are mounted on a sliding frame by moving which either may be brought into position behind the camera. B is the frame, which slides in a box A attached to the back of the camera, and *b* is the focussing-glass and D the dark slide, both being fixed in the frame B,

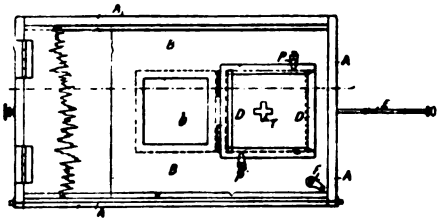

which can be slid backwards and forwards in A by the rod E. This rod engages with a cross-shaped or other projection T on the shutters of the dark slide. By turning the buttons P, P the slide can be taken out and reversed. After the slide has been pushed up behind the camera the catch F falls into a notch, preventing the return of B. When the rod E is pulled out it then draws back the shutter of the slide for the exposure.

4375. Rohrbach, C. E. M. March 29.

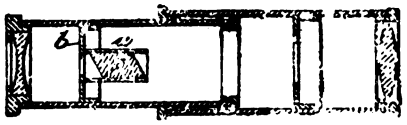

Cameras, screening lens in. Consists in placing a polarizing-prism in a suitable part of a camera or other optical instrument, to cut off light polarized by reflection from bright surfaces, particles of dust &c. In the case of a telescope the prism *a* is placed close to the diaphragm *b* of the eye-piece; in a camera, it is placed in the lens chamber. The plane of the main section of the prism should be arranged to pass through the source of light.

4624. Stanley, W. F., and **Sarjeant, W. L.** April 2.

Actinometers.—The sensitive paper, which is prepared from a bromine salt, instead of the usual chlorine salt, is rolled round a pin in a small circular metal case and brought out through a slot in the case and through a box with a glass top fitted on the edge. The glass is partly covered with tinted paper by which the exposure is estimated. The actinometer may be suspended from the watch chain.

4965. Palmer, E. J. April 9.

Sensitized plates and films, coating-machines for. Relates to improvements on the invention described in Specification No. 3185, A.D. 1885. The flow of emulsion from the reservoir is regulated by gradually enlarging the outlet by the descent of a float acting through levers as the level of the emulsion falls. To secure a more regular distribution of the emulsion, the distributer is provided

Digitized by Google

with an adjustable gate which can be set to regulate the flow of emulsion as desired. A short lever attached to a rod which raises the gate is

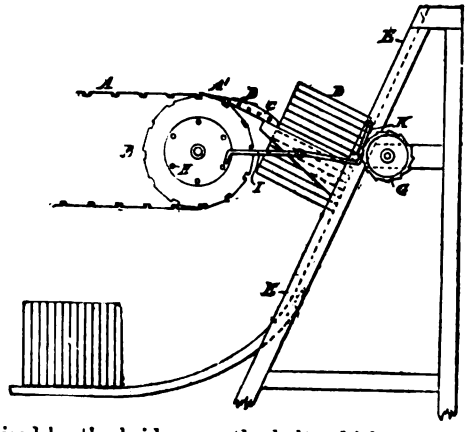

raised by the bridges on the belt which carries the plates. The plates are carried on a pitch chain consisting of short square links connected by flat plates with hooked ends. The Figure shows an automatic contrivance for placing the plates in the rack. A is the pitch chain, passing over the pulley B. The plate A^1 passes down the inclined plane C into one of the compartments of the rack D. By the action of the studs H on the lever I the detent K is lifted, and the wheel G turns round and allows the rack D to descend into a position ready to receive the next plate. The hand distributer described in the previous Specification is provided with an arrangement for lifting the tube to any extent.

5181. Tylar, W. April 14.

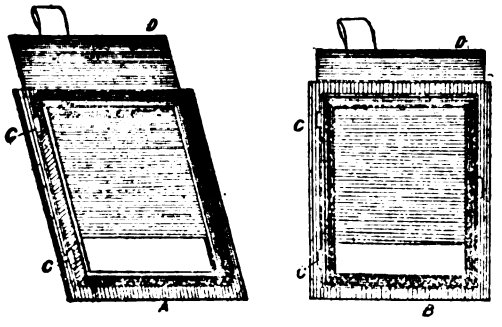

Dark slides.—Two shallow trays A and B are placed together back to back and fixed by pins and eyes C, C. Each shallow tray has a shutter D, D in the front for exposing successively the two sensitive plates. To make the shutters light-tight, they have cloth &c. packing round the edges, the cloth, rubber, &c. being held in the metalwork. The shutters have projecting pieces at the corners to prevent them from being drawn completely out.

5205. Foxlee, E. W. April 14.

Photo-mechanical printing. — Relates to the method of producing printing-plates by electro-deposit upon a gelatine image which has been grained by sprinkling powdered glass, sand, or other gritty substance thereon while wet, and brushing off the same after the gelatine has become dry. This invention consists in substituting for the gritty substances resins, resinous gums, bitumen, and similar substances insoluble in water, which are removed by dissolving them in alcohol, naphtha, and other suitable solvents.

5386. Branson, F. W. April 17.

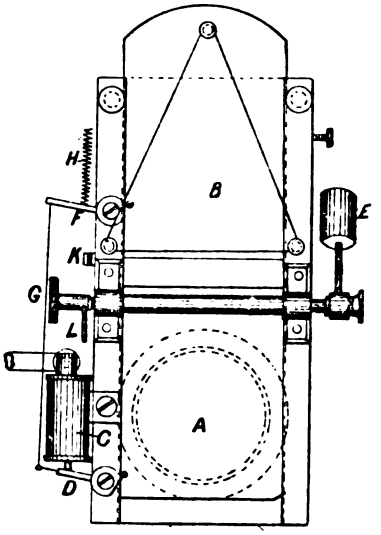

Shutters.—The object is to expose, retain the shutter open, and close it after the lapse of any given interval of time. In the shutter shown, the lens at the commencement is covered by a flap A. By the pneumatic or other arrangement C the lever D is pressed down and the flap rises by the action of the weight E. Through the intervention of the cord G, the lever F is pulled down into such a position that it will intercept the slide B and prevent it from closing the lens. When the pneumatic pressure is relieved the spring H pulls up the lever F and allows the slide B to fall and finish the exposure. The two catch levers D and F connected by the wire G may be applied to other arrangements of shutters for the same purpose. K is a spring check against which the rod L strikes to prevent the flap from rising too far.

5450. Middlemiss, W. April 20.

Cameras.—The front A rises in a fork B which is pivoted at the bottom by the pivots E to a frame travelling in the camera bottom. The

Digitized by Google

pivots E can be lifted out by turning aside the catches F. For folding up, the front is placed face downwards on the baseboard. The camera

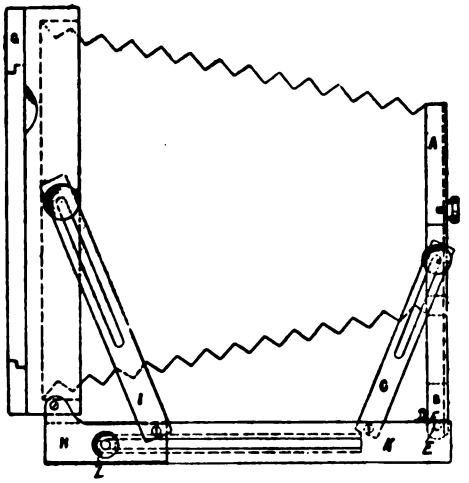

back can be moved from one end of the baseboard to the other, by sliding the plates H to which it is pivoted along slotted plates K on the side of the baseboard. The front A and back G are fixed in position by slotted struts C and I.

5595. Groth, L. A., [*Collardon, L.*, and *Barthel, A. E.*]. April 22.

Photo-mechanical printing.—Relates to a process for reproducing photos in copperplate, lithographic, or printing presses. Common black pigment paper is treated in a bath of bichromate of potash, dried, exposed, and placed in cold water for about an hour, and then in a bath of 6 parts of pyrogallic acid and 100 parts of alcohol for about ten minutes. When completely dry, oxide of zinc or bismuth is rubbed in to produce a grain, and a negative is then taken. This negative is placed between the negative of the photo to be reproduced, and a pigment paper prepared with a strong solution of gelatine and containing a small quantity of pigment, and a positive produced on the pigment paper. The positive is then placed upon a specially-prepared gypsum plate under water. The gypsum mass is composed of 1 to 6 parts of chalk and 50 parts water to each 100 parts of gypsum, being pressed into plates with a polished surface when dry. The plate with the positive is removed from the water, and air removed by a rubber roller or squeezer, and then pressed lightly, and placed in a bath of water and sulphocyanide of ammonia to completely develop it. It is then washed and treated successively in a bath of chrome alum, and in concentrated alcohol, and dried. It is finally impressed into a plastic mass composed of bone dust, albumen, blood, and silicate of soda, the proportions depending upon the hardness required. Any other suitable plastic substance, such as celluloid &c., may be used.

5596. Groth, L. A., [*Collardon, L.*, and *Barthel, A. E.*]. April 22.

Photo-mechanical printing.—Relates to the production of grained negatives for preparing printing-surfaces. Grains of wheat, rye, sand, &c. are attached to a black or white level surface, and from this a reduced photo is taken. Instead of covering the surface with grain, a design may be produced, or the surface may be roughened and inked &c.

5636. Pumphrey, C. April 24.

FIG. 1.

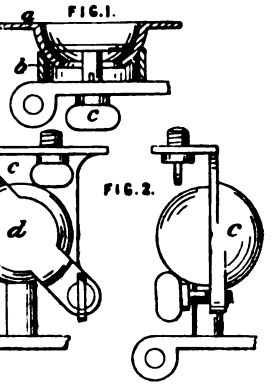

FIG. 2.

Tripod and like stands; cameras, stand attachments for. Relates to a ball-and-socket joint for attaching the legs to the camera. Fig. 1 shows one arrangement; *a* is a flange on a hemisphere for attaching it to the camera, and *b* is a ring or short tube fixed to the leg which may be pressed against its surface by a screw pin *c*. In the arrangement shown in Fig. 2, a sphere is grasped between two partial sockets *c* and *d* on opposite sides of it. Either the ball or the socket may be fixed to the camera.

5654. Groth, L. A., [*Collardon, L.*, and *Barthel, A. E.*]. April 24.

Photo-mechanical printing.—Relates to a method of preparing negatives for use in copperplate, lithographic, and other printing. A plate or roller of copper is coated with asphalt or other thin plastic substance, and exposed in conjunction with a "corn" or irregular negative produced as described in Specifications Nos. 5595 and 5596, A.D. 1886, and is then developed and etched. An uncoloured transfer paper prepared with chalk is strongly pressed against the plate or cylinder. This transfer paper is pressed against a negative of the picture, and photos with grained or irregular surfaces may be taken therefrom.

5793. Journoud, J. B. J. April 28.

Sensitized plates; cameras, focussing-devices for. Consists in the employment of thin plates of celluloid, xylonite, and the like as a support or

Digitized by Google

foundation for positives or negatives. The same material is also used as a substitute for the ground glass or focussing-plates in cameras.

6013. Driffield, V. C. May 4.

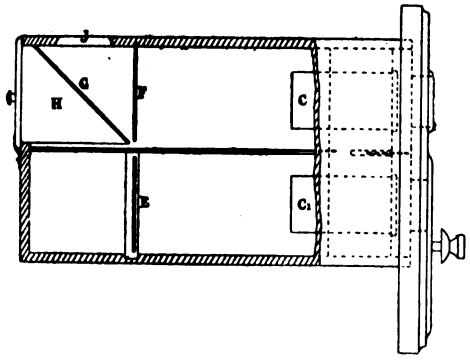

Cameras.—Relates to a detective camera, with one lens C for focussing, and another similar one C^1 for throwing the image on the sensitive plate E. The image on the focussing-plate F is inspected through the hole J by the mirror G fixed on the block H. An instantaneous shutter is fixed on the lens C^1.

6316. Hancock, J. May 11.

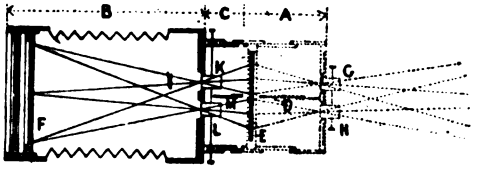

Cameras, stereoscopic. The object is to obtain an image on the sensitive plate combined from two images produced by two separate lenses and made upright by another pair of lenses. The body of the camera is divided by partitions into three compartments A, C, and B. In the front of the first compartment are two lenses G and H. These form two inverted images on a pair of clear glass plates at E. These images are combined and made upright by the lenses K and L on the focussing-glass or sensitive plate at F. D and M are central partitions to keep the rays from the two lenses separate.

6588. Landon, C. E., and **Wilson, J.** May 17.

Emulsions, making.—Consists in a method of rendering chloroform miscible with water. Chloroform water and saponine or gum acacia are shaken together and allowed to stand until the chloroform subsides, when the aqueous solution of saponine is poured off, the remaining emulsified chloroform then mixing with water in any proportion.

6936. Brown, J. May 24.

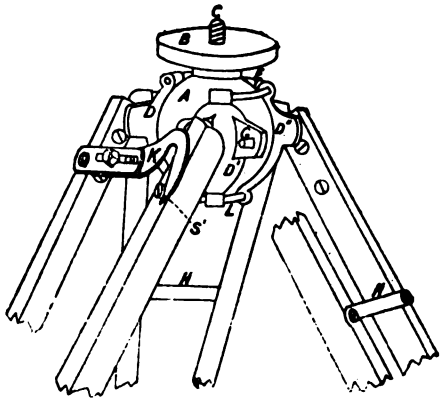

Tripod and like stands.—Relates to means for attaching the camera to the top of the stand. The ball A is connected to the baseboard of the camera by the projecting piece B and screw C. The ball A is supported by three cup-pieces D, D^1, D^{11}, to which are fitted pegs G for the purpose of attaching the tripod legs. E is a spring for pressing the pieces against the ball. The divided ends of each leg are held on the pins by links H. One of these links K is adjustable and has an inclined hook fitting on the pin S^1 by pressing down which the whole apparatus is tightened. Other contrivances for tightening the cup-pieces may be used.

7121. Lowdon, G. May 27.

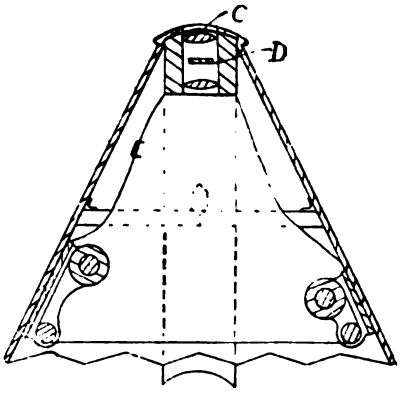

Cameras, detective. The camera when folded up resembles a book. The Figure shows it in its extended position and fitted with a roller slide. C is the lens, and D the shutter, consisting of a slide with a hole in it. E is the cloth forming a light-tight body to the camera. Instead of a roller slide the apparatus may be fitted with an ordinary dark slide.

Digitized by Google

7155. Newman, A. S. May 27.

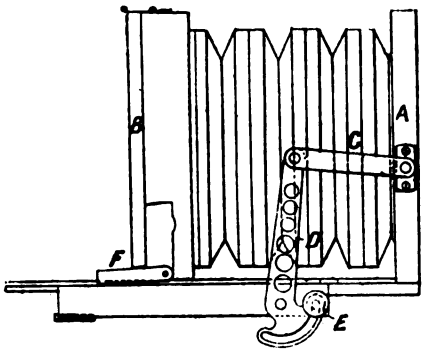

Cameras. — Relates to simplified means for focussing, obtaining swing for front and back, and folding up the camera. The front A is clamped in any given position by the links C and D, the latter having a slotted quadrant fixed by a set-screw E. The focussing pinion and rack is placed in the centre of the baseboard, the head of the focussing-screw being recessed into the base. The back B can be turned about a vertical axis and clamped in any position by a cam turned by the lever F. The tripod top is recessed into the baseboard.

7156. Newman, A. S. May 27.

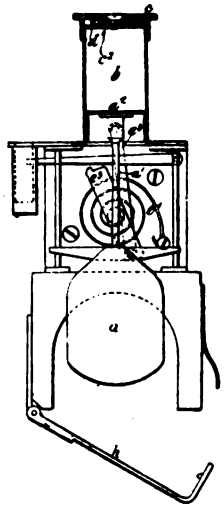

Shutters.—Consists of an apparatus for regulating the length of exposure, which may be fitted to any shutter. A piston a^2 fits in a cylinder b. It is actuated by a spiral spring e^1 through the connecting-rod a^3 and crank or bar e^3. The shutter a is connected to the piston by the rod a^1. The rapidity of movement of the shutter is controlled by the rate at which air is allowed to escape from the cylinder b. This is done by regulating the size of openings d^1 in the end of the cylinder. One method of doing this is by turning round the cap c and snail c^2, the tooth of which covers an opening in the end of the cylinder to a greater or less extent. A strap h is fitted for fixing the shutter on the lens. Suitable catches and liberating-apparatus are fitted on the apparatus.

7359. Watson, T. P. June 1.

Dark slides. — Consists in providing on the shutters of dark slides a stop or stops A, A which shall not project on either side of the shutter but shall be of the same thickness as the rest of the shutter, and slide in the ordinary grooves of the

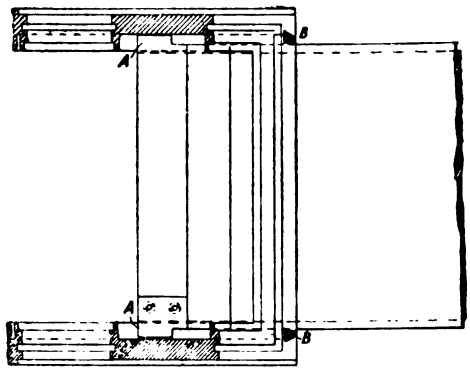

shutter. These shoulders come against abutments B, B fixed at the ends of the grooves of the shutter.

7951. McKellen, S. D. June 15.

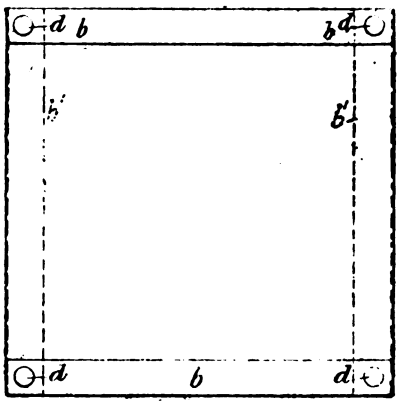

Cameras.—Relates to a method of attaching the dark slides or backs to the camera. The guide-rails b, b are movable to a greater or less distance from each other, to allow dark slides of different widths to be inserted between them. In order to place the dark slides in either a horizontal or a vertical position, the guide-rails are detachable and are fixed by set-screws passing through the holes d, d in either the vertical or horizontal position, as shown by b, b or b^1, b^1.

7963. Vogel, H. W. June 15.

Sensitized films. — The object is to render photographic films containing haloid salts of silver sensitive to the green, yellow, and red rays of light. This is effected by colouring the sensitive films with dyes, which absorb those rays, and are also sensitive to the action of light. Cyanine, and all the red, violet, and blue chinoline and pyrodine dyes are suitable for this purpose. The dye may be dissolved in alcohol, and mixed with emulsion

Digitized by Google

with or without the addition of ammonia or carbonate of ammonia; or the dye may be dissolved in water with or without ammonia. Substances such as chinoline may be added to give stability to the more unstable substances and increase the durability of the plates.

8010. Caldwell, G. June 16.

Dark slides; change-boxes.—The plates or films are placed in frames with close backs and open fronts. A considerable number of these frames are stowed away in a dark box. The box is provided with springs to press the frames together and prevent the entrance of light, and with a sliding top to permit of the insertion or removal of the plate frames at the back and front of the box. Fig. 1 shows one of the frames in vertical section. B is the back of the frame, B^1 a loose flap for retaining the plate in position, and B^2 a recess into which a catch on the shutter or cover fits. Each frame with its plate is withdrawn from the front of the dark box, exposed in the camera, and reinserted at the back of the dark box by means of a shutter or cover which slides over the frame. Fig. 2 shows a combination of the frame with the cover fitted over it. By pressing C^2 the catch C^1 is released to allow of the cover being drawn off. There is a spring catch on the camera to retain the frame while the cover is being drawn off.

FIG. 1.

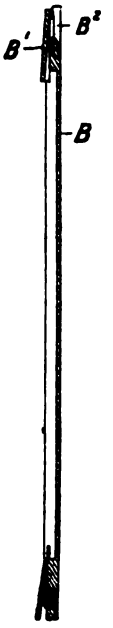

FIG. 2.

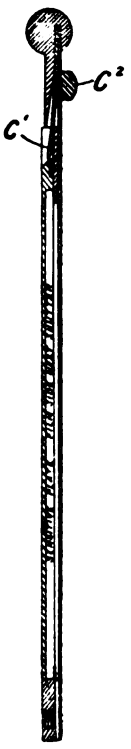

8190. Moore, A. E. June 21.

Shutters.—The shutter consists of two hinged flaps A and B, hinged to opposite sides of a ring which is clamped on the mouth of the lens. The flaps are actuated by coiled springs, and are held in position by two catch levers D and E. These levers are pressed inward by the end of a lever F, the flap B being liberated slightly in advance of A.

(*For Drawing see next column.*)

8190.

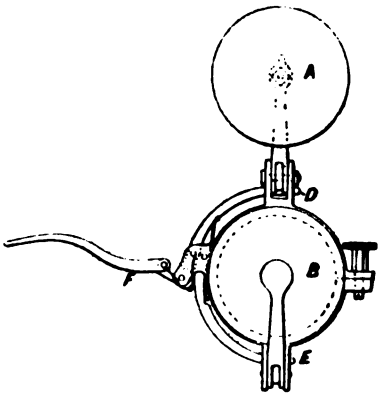

8329. Newman, A. S. June 24. *Amended*

Change-boxes; dark slides. — The frames *b* carrying the plates or films are placed in a box *a*, covered at the top by a flexible bag. There are slits a^1, a^2 at opposite sides of the top of the box; the plates after exposure are pushed up by the crank *c* through a^1, lifted by means of the bag, and inserted at the slit a^2 at the back. A spring *d* presses the plate frames together. The frames *b* for carrying the plates or films are made of metal or other suitable material, and rest against a rib in the box when the plate or film is in focus.

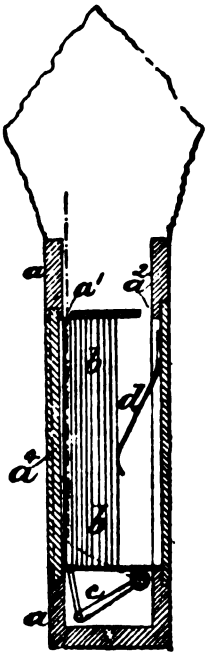

8654. Knight, E. M., and Knight, G. H. July 1.

Cameras, pinhole. These are made of cheap material, and can be folded so as to go into the pocket. Each camera contains a single sensitive plate, and a small perforation at one end to act as a lens. The front of the camera A consists of a piece of cardboard, or other suitable material, in the centre of which is punched a hole B. The hole is covered with tinfoil C, in which a small perforation D is made. The bellows or folding part E of the camera is made of paper or linen.

Digitized by Google

The sensitive plate is pasted to the back. The exposure is made by removing a wafer from the

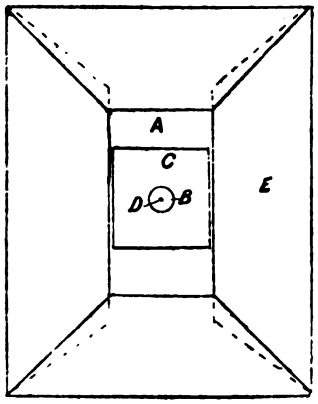

pinhole, for the required time, and then replacing it. A number of these cameras may be folded together and carried in the pocket.

8866. Crossley, E. July 7.

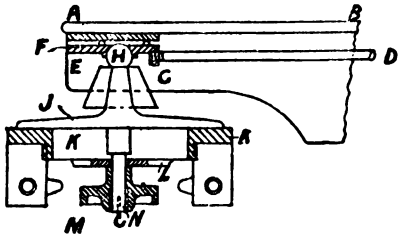

Tripod and like stands for measuring-apparatus. The apparatus is designed for measuring distances over uneven ground. A metal rod C D is provided at each end with caps F which fit spherical heads H mounted on tripod stands. The tripod top is fitted with a ring K, and the spherical head H is attached to a plate J resting upon the ring. The plate K may be clamped in any position by means of a three-rayed star L and milled nut M on a stem N. A plummet is hung from the hook at the end of the stem. In use, one tripod is placed with its plumb-line accurately over the starting-point, and a second tripod at a distance measured by a chain so as to be roughly equal to the length of the rod. The plate J of the second tripod is then adjusted till the caps of the rods fit both spheres. To compare the rod with a standard it is replaced by a tube with one end telescopic and supported in a case resting upon the spheres. The tube is extended till both ends touch the spheres, and its length is measured by a scale and vernier.

9155. Sershall, G. J. July 14.

Vignetting.—Vignetting-masks are formed by printing by lithography or other suitable means on both sides, red on one side and yellow on the other, or any suitable non-actinic colours. The gradation of shade is produced by stipple. After printing, the paper is rendered transparent by varnishing or other suitable means.

9413. Lake, H. H., [*West, R. B.*, and *West, B. C.*]. July 20.

Printing-paper.—The paper is first coated on both sides with starch, and then dipped in a bath consisting of a solution of two parts of potassium, bichromate and one part of mercuric chloride. After drying, it is exposed under a negative, washed, and subjected to a developing-bath consisting of a solution of pyrogallic acid, gallic acid, ferrous sulphate, and sodium hyposulphite. The toning-bath contains lead nitrate. The prints may be bleached by chlorine without toning.

9460. Brown, J. July 21.

Sensitized plates and films.—Relates to the use of gelatine as a substitute for glass or paper. A sheet of paper is coated with a layer of gelatine, which is coated when dry with a layer of wax or grease. On this surface is placed by a vacuum a sheet of insensitive transparent gelatine. When dry this is coated with a layer of the usual sensitive photographic emulsion. The film is now exposed and developed, placed face downwards on a sheet of glass, and allowed to dry sufficiently for the paper to be removed. When completely dry the sheet of gelatine with the image is removed.

9522. Lancaster, W. J. July 23.

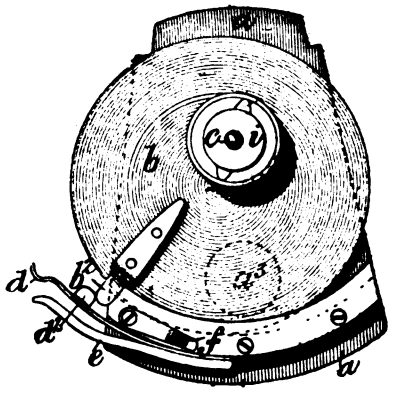

Shutters.—A disc or other suitably-shaped piece *b* is rotated on an eccentric axis *c* by a coiled spring which may receive different amounts of tension by means of the milled head *i*; a^3 is the aperture of the lens, and *a* is the supporting-frame attached to the lens; b^2 is a lever which is held by the spring detent d^2, till liberated by pinching *d* and *e* together. At the end of the exposure b^2 is arrested by the spring stop *f*.

Digitized by Google

9645. Samuels, T. July 26.

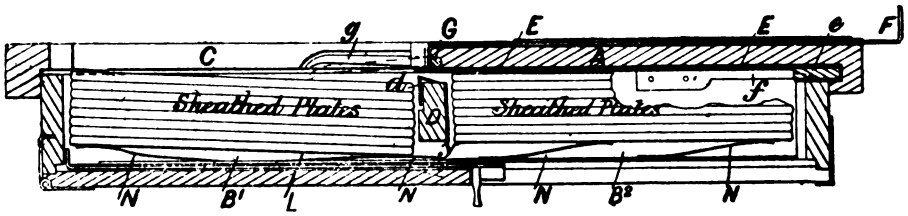

Change-boxes; changing-bags; cameras.—The change-box has two compartments, and the plates are propelled from one to the other by the shutter. The improvements relate to means for canting the sheathed plates or films in the receiving-box to make room for the incoming plates. They consist of springs or of lever arms on a rock shaft, or a combination of the two. B^1 and B^2 are the two compartments of the box, C being the aperture where the exposure is made. The plates are brought into the position for exposure from the box B^2 by the shutter E, which is wholly within the apparatus and actuated by a sliding rod F. The propelling-part of this shutter consists of a strip of wood or metal *e*. A bevelled detent *d* on the division between the two compartments prevents the plate from being drawn back by the shutter. *f* are springs which are pushed back on the return of the shutter and allow the front plate to come forward. *g* are lever arms on a rocking shaft G for canting the plates in B^1. The lever arms may act on the sheath of the plates, or press on springs which act on the plates. These levers may be actuated by hand, or automatically by the shutter. In order that both compartments of the box may be full, an opening *y* is provided at the back of the partition D to remove plates from B^1 to B^2, by means of a sliding catch L actuated from the outside. N, N are curved springs for pressing the plates forward in each compartment. The next improvement relates to a box with a single compartment and a flexible bag at the top for transferring the exposed plates from front to back. The springs *f* and the shutter for lifting the plates into the bag are the same as in the last improvement. Lastly, a lever is used for focussing instead of a rack and pinion

---

9655. Allison, H. J., [*Stirn, C. P.*]. July 27.

Cameras, detective. The camera is a flat circular case A which is concealed below the vest of the user, the lens B occupying the place of one of the buttons in the centre of the chest so as to pass unobserved as a lens. By turning a button C at the centre of the camera, a spring D is wound which afterwards actuates the exposing shutter F, and the sensitive disc E is at the same time turned round to expose a fresh part under the lens.

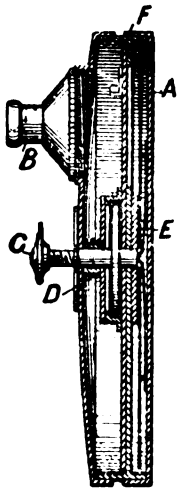

Shutters.—The shutter F is a rotating disc with apertures in it which pass over the lens opening.

9756. Lake, H. H., [*McLaughlin, G.*]. July 28.

Cameras.—Relates to a folding bed or track serving as a substitute for the ordinary baseboard of the camera. It is formed of a rectangular metallic frame A, the sides of which telescope and are fitted with racks and pinions B for focussing

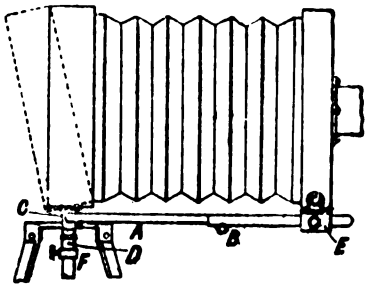

purposes. The back of the camera is fixed to two blocks C, which can be clamped at any angle by set-screws D on the transverse bar, thus allowing vertical swing to the back. The front of the camera is pivoted to allow for horizontal swing to a cross-bar, on the ends of which are blocks E recessed underneath, so as to fit on the side bars of the base frame. For folding up, these blocks are lifted off the frame, the bellows collapsed, and the base frame folded up. To one end of the base frame a peg F is fixed which fits into a hole on the tripod top. In some cases the peg may be at the other end of the frame, and a cone bellows may be employed. The folding track may be fitted within the camera. The arrangements for effecting the lateral swing of the lens section may be modified.

Digitized by Google

9788. Phillips, A. July 29.

Shutters.—A slide A moves up and down in the frame of the shutter B, B. When the slide is down it covers the mouth of the lens and is drawn up by an elastic band C passing over two stops D, D on the frame and one on the shutter. The shutter is held down by a triangular catch F on the end of a flat spring G. This flat spring can be raised to liberate the shutter pneumatically by the expansion of an india-rubber ball H below one end of the spring. The slide is thrown up against a spring buffer K which may be set at different heights. For long exposures, the shutter when it has been thrown up may be kept in that position for any length of time.

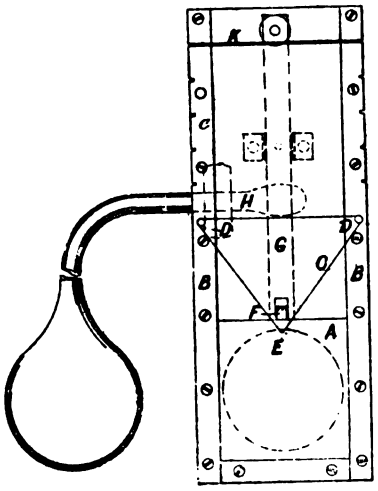

9886. Cadett, J. W. T. July 31.

Sensitized plates and films, coating-machines for. Relates principally to two improvements in coating-machines, viz.:—Causing the coated plates to pass under a rod or surface to gauge the thickness of the coating; and intermittently opening plugs for regulating the delivery of the emulsion from the trough. B, B is an endless belt for carrying the plates G, G. T is the tube or rod to gauge the thickness of the coating on the dry plates. V is the trough containing the emulsion. C is one of the plugs for delivering the emulsion on to the plate. These plugs receive an up and down motion from the crank *h* through connecting-rods, as shown. To prevent the gauge rod T from turning completely round when the plates G, G are passing under it, a stop S is fixed so as to come in contact with the spring *r*.

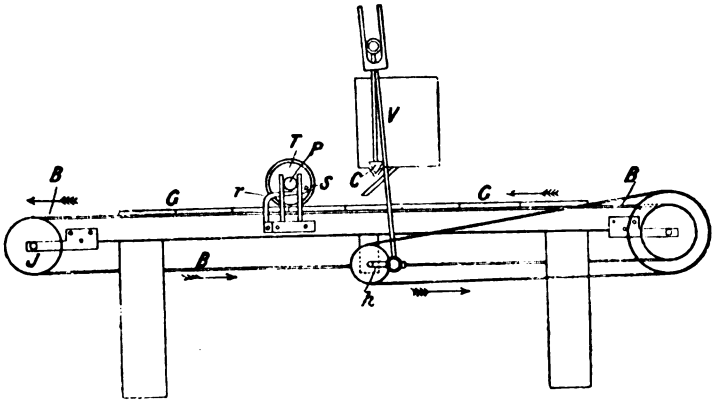

9970. Marsden, S. Aug. 4.

Tripod and like stands.—Relates to means for adjusting and holding the movable stems of stands used for various purposes, such as stands for mathematical and other instruments &c. The stem A slides in a socket B fixed by a flange B^1 to the body of the stand or support. Sliding on inclined surfaces *b*, *b* in the socket is a wedge C, which may have serrations c^1, c^1 engaging serrations a^1, a^1 in the stem, or both may be plain, in which case the stem may be tapered. By pushing the end E of a rod D passing down a groove in and fixed to A, the wedge C may be slightly raised, allowing the height of the apparatus to be adjusted. The slot B^2 and the projection B^3 limit the motion of the wedge. A pad or spring fitted

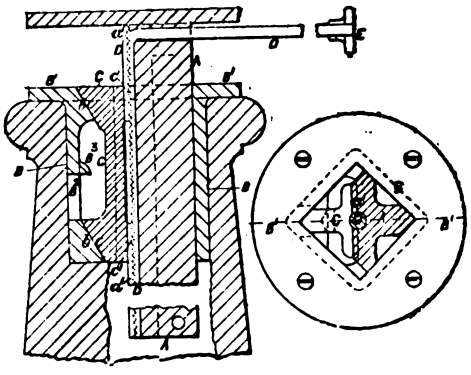

Digitized by Google

to the wedge prevents clicking when the stem slides. Rollers may be fitted to the wedge at *c*, *c*, or the wedge may be hinged by two links like a parallel ruler. The Provisional Specification describes an arrangement in which a lever is used to operate the wedge C.

10,483. Hösch, J. C. Aug. 16.

Photo-mechanical printing. — The colours are printed successively by surfaces prepared as follows :—A negative is taken from the painting &c. to be reproduced, and from this a number of diapositives. These diapositives are treated with varnishes to produce the tones &c. for each of the colours. Negatives are then taken from these, and the parts of each which are not required for the special colour are covered as the original requires. The negative originally produced is used for the grey colour. From the negatives thus obtained, gelatine plates are prepared, and the colours printed successively. The last impressions are the grey and an intensifying or finishing colour.

10,659. Froedman, F. H. Aug. 20.

Sensitized plates and films.—Gelatine, glue, &c. is dissolved in a solution of bichromate of potash or other chromate ; the solution is mixed with alcohol spread on a glass plate coated with collodion &c., dried, exposed to light, and washed. The coated plate is then immersed in a solution of sulphurous acid or one of its compounds, and again washed and dried. The transparent film can then be removed from the glass and coated with any photographic emulsion.

10,770. Urie, J., and **Urie, J.** Aug. 23.

Printing.—The object is to print the papers under the transparent negative, and move it on automatically after each exposure. The pressing-pad and frame C, C¹ are raised and lowered under the sensitized paper Z, or the negative N with its frame B are lifted off the paper at suitable intervals by an arrangement of levers M, M¹ and compensating springs m^1. The movement of these levers is controlled by a pin barrel or disc I, *i*, which is turned at a uniform rate by clockwork G. There are series of pegs of different numbers to give different intervals. D is the measuring-roller, which pulls round the sensitive paper when the spring catch *l* releases the stop d^2. Z^3 are the pressing-rollers. The shutting down of the light Y, Y which prints, is effected by a cock or piston valve regulated by the pin barrel or disc I, *i* and levers L, L¹, L². A modified form is described in which the parts are removable, and thus varying sizes of measuring-rollers can be used ; also, instead of the web being boxed in and the lamp open, the lamp is enclosed in a chamber while the web is exposed, the apparatus being used in a dark room.

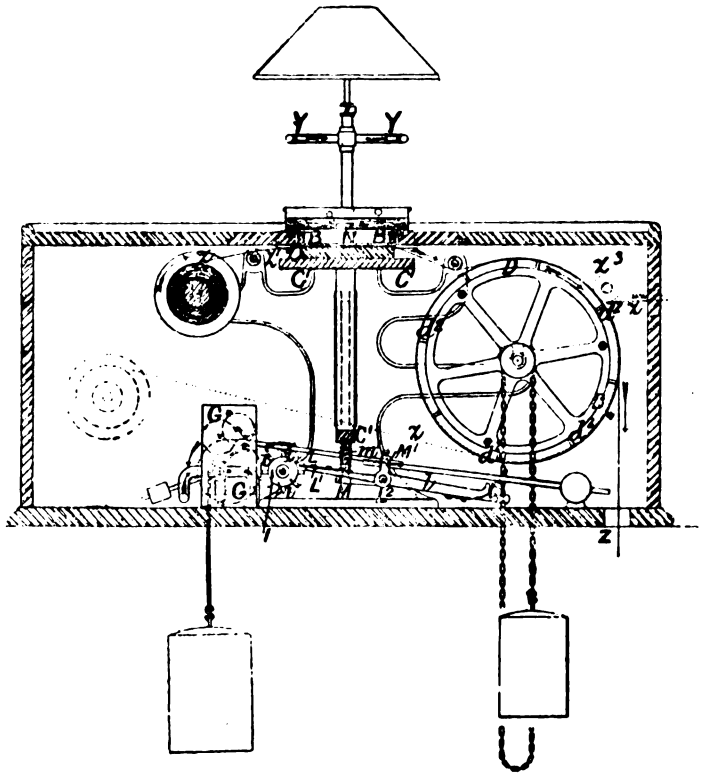

Digitized by Google

10,783. Knight, E. M., and **Knight, G. H.** Aug. 24.

Cameras.—Relates to a method of folding the pocket camera described in Specification No. 8654, A.D. 1886. The necessary creases are produced in the paper for making the bellows by fixing angle-plates B, B, B, B on a board A. The paper is fixed in position by the pins C and D, and pressed down on the edges of the angle-plates B; it is then turned over and applied to another board with plates to produce the necessary creases in the opposite direction, after which it is finally folded over a block and gummed.

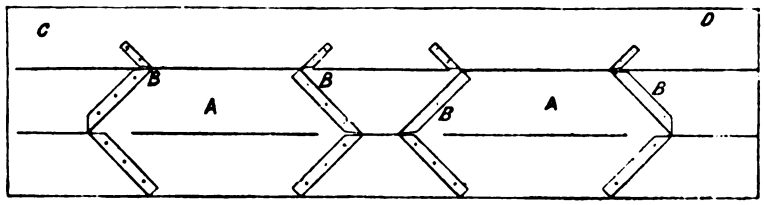

11,175. Riley, W. J. Sept. 2.

Tripod and like stands.—The legs E, which may fold back along the standard, and which may be three or more in number, are jointed to a collar D fixed near the lower extremity of the telescopic standard A, B, and are held extended by catches F, G, hinged to the legs or to the bottom of the standard.

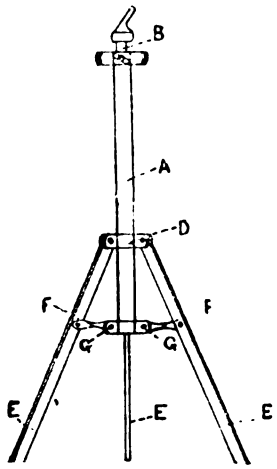

11,365. Cooke, H. J., [*Fetter, J. F.*]. Sept. 7.

Cameras, detective. The camera may be carried by a strap or worn under the waistcoat, the lens serving as a button. It consists of a disc-shaped box about 1 inch thick and 6 inches in diameter. Five plates are arranged round a disc which turns on an axis so as to bring the plates successively under the lens. The instantaneous shutter consists of two sectoral plates, each with a circular aperture, which are actuated by links G^1, G^2, and the block G, connected to a rod which is surrounded by a coiled spring and has a knob J. The shutter is set by pulling down the knob J until the pawl K catches in a notch in the rod. By pressing the button L the shutter is liberated. The chamber for holding the plates is composed of the following parts:—A brass plate cut with 4, 6, or more square openings corresponding to the dimensions of the photographs required; a sheet of cardboard with as many openings cut in it as in the first plate, which is used as a frame to hold the sensitive glass plates placed in each of the openings; and the bottom plate N. These parts are held together by the safety shutter plate M and its axis R and index handle S. The space where the sensitive plates are placed is shut in with a ring which can at will be moved from right to left or *vice versâ*, so as to substitute a fresh sensitive plate for the one used in taking an object.

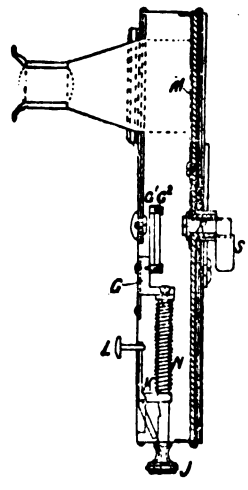

11,615. Arundel, S. D. Sept. 13.

Plate boxes designed to afford special facilities for lifting the plates out of the box. The box A is made of cardboard or strawboard. At the ends a number of grooves *a*, *a* are formed of corrugated paper, tin, &c., to keep the plates apart. *b*, *b* are flaps which fold down at the ends to allow the plates to be lifted out easily. *c*, *c* are supports of cork to keep the plates clear of dust which may accumulate on the bottom of

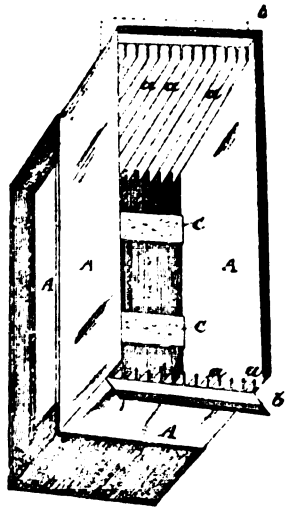

Digitized by Google

the box. The lid which fits over the box is of considerable depth, to thoroughly exclude the light.

12,238. Thornton, J. B. Sept. 27.
Amended.

Shutters.–The shutter is of the "spring blind" type, and is constructed so as to enable the shutter to be used for long or short exposures and to indicate when it is open and shut. A is the axis of the spring roller on which the blind is wound, and B the roller from which the blind is drawn. A pinion on the roller B gears into a wheel C having a stud D, which may or may not catch on the detent E according as it is folded in or out. When the stud does catch the shutter is open, and held open till the pressure on the pneumatic bag F is released and allows the lever G to fall back. An additional wheel H is provided having a pointer K which makes one revolution for a complete movement of the blind of the shutter, thus showing whether it is shut or open. L is the detent which releases the blind when lifted by G. The shutter may be made to fit behind the lens.

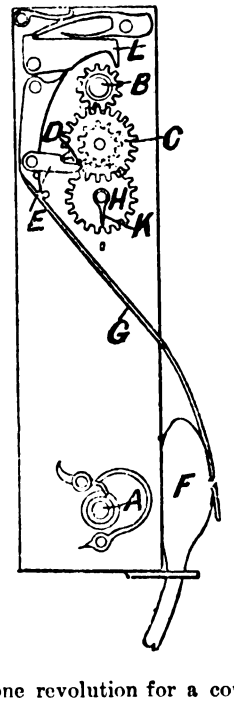

12,250. Swift, J. Sept. 27.

Shutters. — This shutter may be used for instantaneous or long exposures. It consists of two slides A, A sliding in the same groove and meeting in the centre. For instantaneous exposures one is thrown up and the other down by the springs F and E. The lens is closed by the descent of the upper slide, which may be accelerated by the spring G. The slides are liberated by a pneumatic arrangement which withdraws the fork C from the pins B, B. For long exposures the fork C is fitted on the pins H, H. The spring F pulls down the lower slide to make the exposure; the upper slide drops on releasing a gripping-spring by the pneumatic arrangement D.

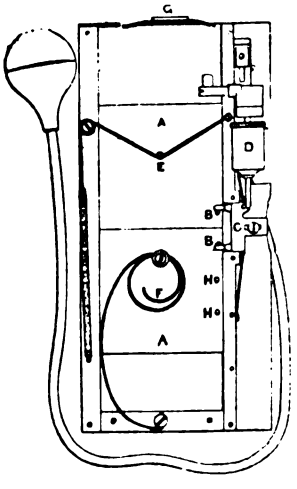

12,571. Lancaster, W. J. Oct. 4.

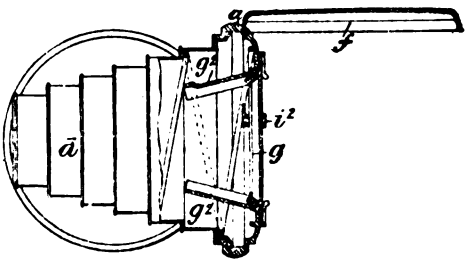

Cameras, detective. Relates to portable or detective cameras. The camera may have the outward form of a watch case, cigar case, match box &c. The Figure shows the watch form. *a* is the case; the bellows *d* consists preferably of telescoping tubes, which, when not in use, can be squeezed into the case and covered by a cap. A spiral spring is contained inside the camera to keep it distended. g^2, g^2 are hinged shutters to the dark slide, which may also be used for making exposures, being liberated by turning the catch i^2. *g* is the dark slide, which fits into a hole in the back of the case and is held by suitable catches, and covered when the back cap is shut down.

12,700. Edwards, B. J. Oct. 6.

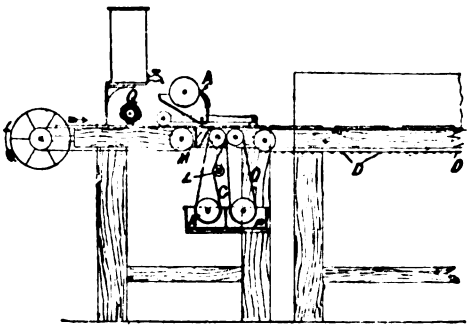

Sensitized plates and films, coating. Consists of improvements on the plate-coating machine described in Specification No. 8643, A.D. 1884. An india-rubber flap or edge A is fixed to the scraper or distributer. To effect more rapid cooling of the emulsion, the tunnel or box through which the plates pass is provided with inclined Z-shaped channels to hold lumps of ice and allow currents of cold air to fall on the surface of the plates. The travelling or carrying bands are manufactured with two rows of raised loops D by means of two

Digitized by Google

thick longitudinal wires, and cross-wires, which are afterwards withdrawn. To clean the backs of the plates, an endless band C rotates over pulleys below, and passes through a trough of hot water K and over a drying-roller L. O is a similar band passing through a trough P containing colouring-matter to colour the backs of the plates and prevent halation. M is a porcelain or other trough placed between the carrying-bands to catch the waste emulsion which flows off the plates. Q is a brush to remove dust from the plates before coating.

12,755. Leisk, J. Oct. 6.

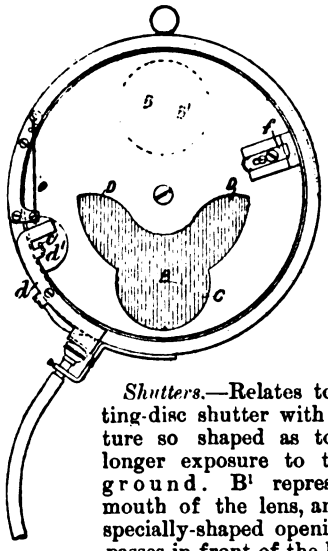

Shutters.—Relates to a rotating-disc shutter with an aperture so shaped as to give a longer exposure to the foreground. B¹ represents the mouth of the lens, and B the specially-shaped opening which passes in front of the lens aperture during the exposure. The part C is semicircular; the other part D, D is spread out into two wings so that it may occupy a longer time in passing the lower half of the lens aperture. The shutter is started by withdrawing the detent d^1 from the stop c on the disc by the pneumatic lever d. At the end of the revolution this stop is caught and retained by the buffer spring e. f is a bolt to fix the shutter open for focussing by abutting against the detent d^1.

13,240. Thornton, J. B. Oct. 18.

Cameras.—The baseboard a has a hole b in it, in which fits a turntable d. Round the turntable are recesses h in which are fitted plates j, j, having holes with tapering inlets for holding the pins at the top of the tripod legs. g is a clamp for fixing the turntable in position to the baseboard. The fork p which carries the front is made so that it can be easily disconnected, by semicircular bearings, which rest on the shaft of the upper focussing-pinion l. To hold them in position one side of the semicircular bearings is slipped under a collar by means of a spring. A revolving lens panel is fixed in the front, which is made in two halves in order that the panel may be more readily inserted. A flange or ring v surrounds the panel to exclude light. The lenses in the revolving

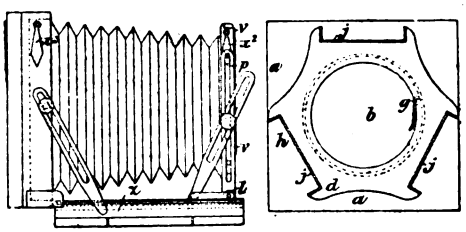

panel which are not in use are covered by a disc pressed up by a spring. The guide-rails z for guiding the extension frame are of angle brass or other metal; this enables a front board of exceptional size to be folded within the recess. x^1, x^2 are pivoted plates or pointers to enable the back and front to be adjusted in a vertical position.

13,380. Brunner, J., and **Klary, C.** Oct. 20.

Photo-mechanical printing.—Printing-surfaces are formed of celluloid, xylonite, or other analogous substance by pressing a gelatine photo-relief thereupon in a heated state. The pressure is preferably applied by a press with steam-heating and with cooling arrangements. The celluloid is placed upon a plane steel surface against the photo-relief, which is also against a plane surface, and placed in the press. The temperature is then raised to about 110° C. and a pressure of about 40 kilogs. to the square centimetre maintained for five minutes. The steam is then turned off and the press cooled by circulation of water, and the pressure removed when the normal temperature is assumed. The celluloid, before being treated as above, is submitted to a preliminary pressing operation between plane surfaces.

13,549. Brookes, W. Oct. 23.

Cameras; shutters; lens fittings.—This camera is adapted to be used for long or rapid exposures. A hood D is hinged at the top, and has two quadrantal side pieces, serving instead of a focussing-screen. A metal strip H is pivoted at h to the hood, having a hole near the lower end, which when turned to the top forms, in combination with the hinged frame I, a view meter. The shutters of the back B are hinged at the bottom to the slide, and are opened inward after being released from the catch g through the opening G by turning the axis c, to which the arm E is attached. C is a focussing-screen, which, when not in use, is concealed in the bottom of the camera. In box-body cameras the lens is attached to an inner front L, which is actuated by the focussing-pinion m. O is an outer front, hinged at the top, which may be used as a shutter for long exposures. For rapid exposures this is fitted

Digitized by Google

with a rotating-disc spring shutter P, which is turned on the axis p^1 by an india-rubber spring q

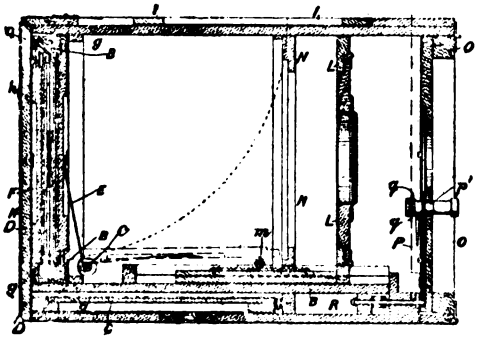

when liberated by the catch R. N is an inner frame to prevent the light from leaking through the movable front L.

13,580. Clark, A. M., [*Cain, C. T.*]. Oct. 23.

Mounting films; producing transparencies.—Relates to a process for producing pictures or transparencies on, or transferring them to, celluloid films. A plate of glass is properly cleaned, and round it is formed a safety edge of albumen; this is to prevent frilling. The picture or transparency may be formed on this plate by the collodio-chloride process, being printed, toned, and fixed as usual; or by the ordinary wet collodion process through a negative. When the film is dry and ready to be transferred to the celluloid card, a solution of gum camphor and alcohol is run over the card. This solution dissolves the celluloid surface and makes it sticky. The card is then applied to the film, and after it is dry it strips the film from the plate.

13,620. Dollond, A. W. Oct. 25.

Tripod and like stands for cameras &c. The sliding part *a* of a leg is of the special section shown at A, and slides through a corresponding hole in the block B or *b*, *b* connected to the other part *c*, *c* of a leg. On partially rotating the part *a* it is jammed or released.

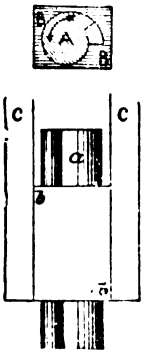

14,099. Kellar, A. Nov. 2.

Washing prints. The apparatus consists of a perforated cylinder F, to contain the prints, which is caused to rotate inside a tank E containing water. Rotation is imparted to the cylinder by the action of a jet of water upon a water-wheel G

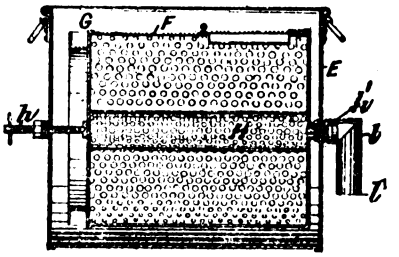

at one end of it. The cylinder F rotates on centres h and h^1, and the water escapes into a hollow perforated axis H and thence through the elbow pipe l, which can be turned to regulate the level of the water in the tank by raising the nose l^1 to the required height.

14,120. Parkes, E. W. Nov. 2.

Colouring photographs. A positive is printed on carbon tissue or other suitable film or pellicle from a negative in the usual way. The reversed side of the print is pressed on the glass, opal, porcelain, eggshell glass, or other suitable material which has been previously waxed, or French-chalked and collodionized. The print is developed on this support, allowed to dry, and receives the colours in flat tints. Oil or water colours may be used, but oil colours are preferred. Substances are added to bind the colours and prevent them from running into one another. The medium stated to answer best in practice consists of three parts of terebene, one part of pure mastic, and a few drops of oil of turpentine thinned with ordinary spirit of turpentine. Sometimes amber and best copal varnish in the proportion of one to twelve, or japanned gold size diluted with oil of turpentine is added. The oil colours may be applied by a stippling-brush. A layer of the following mixture is then poured over the colours:—One part of borax dissolved in twelve parts of boiling water and an equal quantity of white lac varnish. After drying, the print is stripped from the support and mounted in the usual way.

14,262. Park, H. Nov. 5.

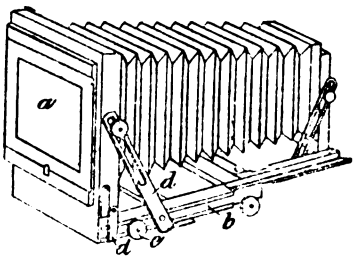

Cameras.—The baseboard of the camera is telescopic, the back *a* being fitted to the lower

Digitized by Google

baseboard and the front to the upper part, which slides in it; in grooves in opposite sides *b* of the baseboard are fitted slides to support the brackets *d*, *d* attached to the back; *e* is a set-screw for fixing the slide.

14,401. Browne, A., [*Cellerier, L. J. H.*]. Nov. 8.

Colouring photographs. A silver print is taken from the negative. On this is fixed, by arrowroot paste, a sheet of white paper to which the colours are to be applied. The print with the adhering paper is placed on a re-touching frame, the print serving as a guide for applying the washes of colour. The coloured paper is then removed, floated on cold water, and caused to adhere to a print obtained by the double transfer carbon process, the colours being caused to coincide accurately with the proper parts of the carbon print.

14,410. Mayfield, J. T., and **Todman, J. T.** Nov. 8.

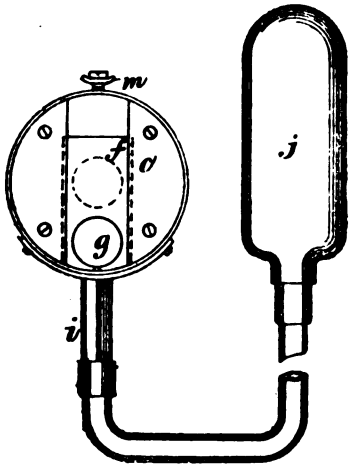

Shutters.—A slide *f* with an aperture *g* in it is moved up and down by the action of a fluid on a piston in the cylinder *i*. The fluid is forced into the cylinder by squeezing the ball *j* till the opening *g* of the slide coincides with that of the lens. The slide is held in this position till the exposure is complete, when it is allowed to drop by relaxing the pressure on the ball *j*. A buffer *m* is fitted to minimize the shock of the slide. In a modification, the cylinder is at one side of the lens tube, and the piston is connected to the slide by a bent rod.

14,421. Thornton, J. E. Nov. 9.

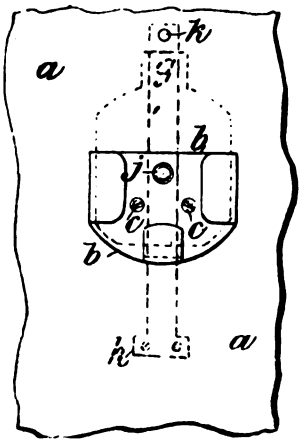

Lens fittings.—Relates to means for holding lens diaphragms when they are not in use. The object is to dispense with the loose case for holding the diaphragms and to substitute a holder fixed to some part of the camera. The holder consists of a pocket *b* fixed by screws *c*, *c* to any part of the camera *a*, and having three wings in front to retain the diaphragms. A flat spring *g*, fixed to the camera at *h*, has a central peg passing through the centre of the diaphragms, and a peg *k* at its upper end for pressing back the spring in order to release the diaphragms.

14,548. Dessendier, J. E. Nov. 10.

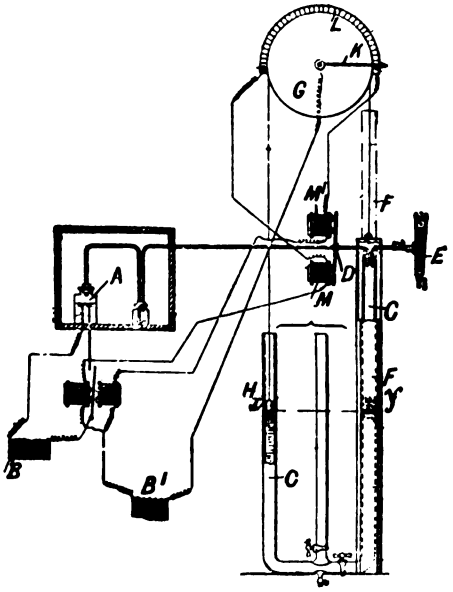

Actinometers for use in photography. The actinic power of the light is estimated by the rapidity with which a mixture of hydrogen and chlorine combine under its influence. For this purpose hydrochloric acid is electrically decomposed in the bottle A, when the circuit of the battery B is closed, and the component gases led to the larger leg of a U tube C, when the cock D is opened by the closing of one of the circuits of the battery B¹. The U tube is filled with liquid up to the zero

Digitized by Google

point (line x y), and blackened below this point; the longer leg can be exhausted of air by a bellows E, and a sliding cover F works over this leg, and is connected, by a cord passing round the pulley G, with a float H on the liquid in the other leg. The pulley carries an index-hand K moving over a scale L and completing circuits of the magnets M and M^1 respectively at either extreme position; these magnets M and M^1 control the cock D. Various cocks are fitted to the U tube to control the apparatus by hand. The action is as follows:—Having exhausted the air in the longer leg of the U tube by the bellows, and consequently caused the liquid to rise, the index-hand makes contact for the circuit of M, opening the cock D and completing circuit for the battery B, so that the gases are generated. When the gases have driven the liquid back to zero position the cock-closing circuit is completed, and the supply circuit broken. The apparatus is then exposed to the light to be tested, which is admitted through a narrow slit in the guard tube, and the rapidity of the movement of the index-finger as the gases combine and the liquid rises, measures the actinic power. A record may be kept on a drum revolved by clockwork, the pencil being traversed along the drum by a screw rotated by a descending weight and controlled by an electric escapement from the rotating pulley G.

14,931. Burns, W. Nov. 17.

Lens fittings; dark rooms; changing-bags.—Relates to elastic frames for enabling panes of glass to be applied to dark tents and bags, or lenses to cameras, where it is desired that the glass plates or lenses should be readily inserted or removed. They are made of india-rubber or other extensible material with a groove for the reception of the glass, and are attached by cement &c.

15,187. O'Reilly, W. P. Nov. 22.

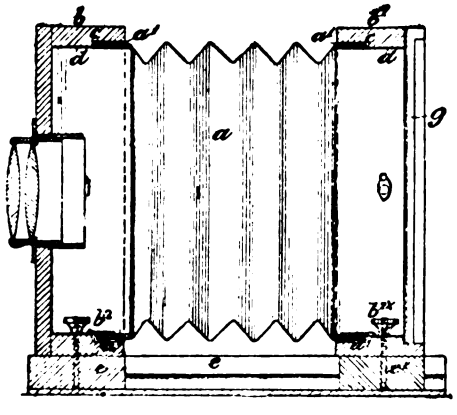

Cameras.—The apparatus can be adapted for use as either photographic camera, photographic enlarging lantern, or magic-lantern. The bellows a is made so that it can be detached from the front and back b and b^1. The bellows is attached to frames a^1, a^1, made to fit in grooves c, c in b, b^1. The inner surfaces of the camera ends b, b^1 are lined with blackened tin plate d, d. The front is secured to the baseboard e by a screw b^2, and the back to the sliding piece e^1 by the screw $b^{2\times}$. The focussing-glass and slide are fitted in the groove g. When used as a magic-lantern a metal case is substituted for the bellows. A tin back and reflector is slipped in the groove g, and the conical front with slide holder attached in any suitable manner.

15,532. Vogel, H. W. Nov. 29. *Amended.*

Sensitized plates and films.—The isochromatic plates of commerce are less sensitive than ordinary dry plates and require the interposition of a yellow plate. The invention makes them more sensitive and dispenses with the yellow plate. It consists in the use of eosides of silver, and the addition of other optical sensitizers to silver salts. Ordinary dry plates are bathed in a soluble salt of silver and then in a solution of eosin dye. Or a silver eoside may be formed and added to the emulsion. Optical sensitizers such as cyanine, quinoline red, &c., which do not chemically combine with silver, are added to increase the sensitiveness. Salts of lead may be used instead of silver.

15,661. Boult, A. J., [*Eastman, G.*]. Nov. 30.

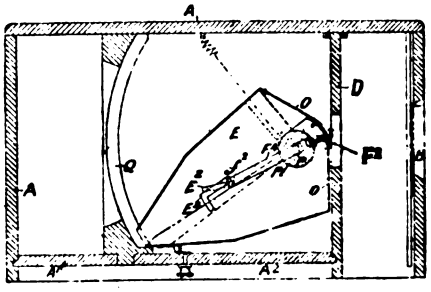

Cameras; shutters.—The sensitive film is placed on a curved surface Q. The exposure is made by causing a streak or band of light to pass over the surface of the sensitive film. This is effected by the oscillation of a wedge-shaped chamber E on an axis P inside the camera. The chamber has an elliptical opening O next the lens at which the rays enter, and a slit at the further end. The sides of the chamber can be moved to different distances apart so as to vary the width of the exposing-slit. This is effected by a crank disc F^2, connecting-rod F^1, pin f^2, working on oppositely-inclined surfaces E^1 and E^2 fixed to the opposite sides of the chamber. The crank can be actuated from the outside. The exposure is made by allowing the chamber E to fall, turning on its axis from its highest to its lowest position. The speed of falling is regulated by a brake. A is the camera case. A^1 and A^2 are sliding bottoms fitted to the camera. The lens is fixed to the inner partition D.

Digitized by Google

15,697. Parker, J., and **Lee, D. T.** Dec. 1.

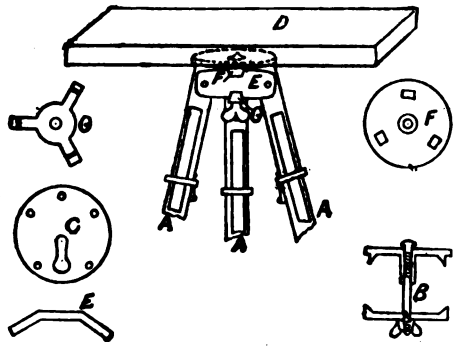

Tripod and like stands for cameras, colour boxes, &c. The legs A are held in their extended position by a clamp which also connects them to the camera &c. The head of the bolt B engages a slotted plate C on the underside of the camera &c. D, and by screwing up the winged-nut the plates E are held between the claws of the clamping-plates F, G. When metallic legs are used, balls on their upper extremities are gripped between two clamping-plates. Half-balls on the sides of the wooden legs may be gripped by corresponding recessed clamping-plates. Instead of the head of the bolt engaging a slotted plate C, the bolt may be formed with fingers gripping a ball on the underside of the camera D. Another form of clamp is described, consisting of a band passing round grooved segments of a sphere and tightened by a nut. The telescoping portions of the legs are secured together by sliding rings and wedge-pieces.

15,727. Foxlee, E. W. Dec. 1.

Sensitized plates and films.—Relates to stripping-films, or those sensitive films which are ultimately detached from their paper backing. A plate of glass is taken and coated with collodion, the surface of the glass plate having been previously coated with French chalk or some substance that will prevent adhesion. The negative film with its paper backing is then squeezed on to the collodionized surface of the plate. After drying with blotting-paper, the negative is placed in hot water, in order to detach the paper backing. A sheet of gelatine is now squeezed or cast on in place of the paper backing, and, after drying, the negative film is stripped from the glass, bringing with it the layer of collodion from the glass plate. The gelatine support is coated on the back with collodion, and the whole negative is thus enclosed between two impervious layers of collodion.

15,873. Kingdon, Z. H. Dec. 4.

Cameras.—The fronts and backs of photographic cameras, magic-lanterns, and similar apparatus are connected by systems of links or levers, which are constrained by springs, stops, catches, &c. The front and back can thus be separated or pushed together by one simple movement. In the Figure

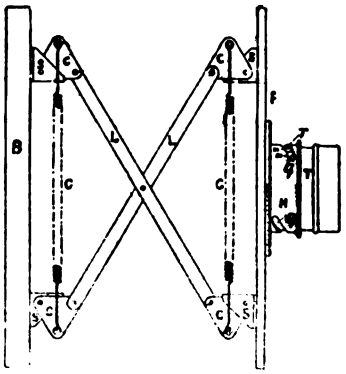

they are shown connected by the diagonal links L, L, the ends of which are pivoted triangular links C, C, which are themselves pivoted to the brackets S, S on the front and back. The springs G, G, which are connected to the links C, C, maintain the tension on the links L, L. Other arrangements are described, in one of which stretcher levers are jointed like the blade-joint of a knife, while in another the stretcher bars or levers have stops near their joints which prevent them from doubling backwards except a small amount past their dead centres. The focussing is effected by moving the lens T by the rotation of a sheath H with inclined slots *q*, *q*, which act on studs *r*. The senses of touch and hearing may be used for focussing and adjusting lenses by the action of a spring on notches &c.

16,012. Edwards, E., [*Brand, H.*]. Dec. 7.

Printing. — Relates to a printing-frame to be fitted in place of one of the frames of an ordinary window, the remaining panes being rendered impervious to actinic light. The frame *a*, shown in section, is fitted in the window. Two

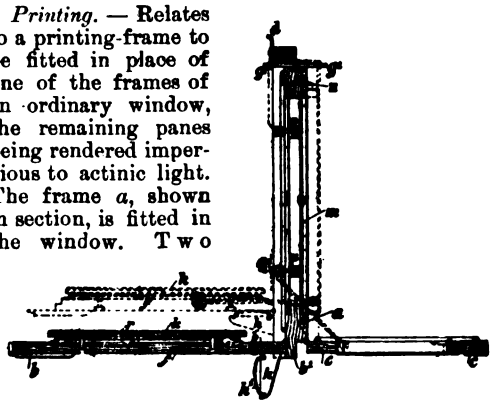

frames are hinged to this frame, one *b* inside the window, which carries the sensitive plate, and the other *c*, *c* outside the window, which is made of non-actinic material and is intended to exclude the daylight till the paper is in position for printing. The frame *b* has an inner frame *f* hinged to it, to the inside of which is attached a spring

Digitized by Google

support *k* for the sensitive paper, which is held in position by a thread *r*. A bracket *h* and spring h^1 support the frame *f* when it drops down. The negative is pressed against the glass pane *m* by the two adjustable cross-bars *n*, *n*. A pivoted catch g^1, g^2 is arranged to allow the shutter *c*, *c* to drop when the frame *f* is pressed against the negative. The outer frame *b* is fixed by a bar *d*; *u* is a rod to ensure the detachment of the outside frame when the inner is closed, and *vice versâ*. The shutter *c*, *c* may be pulled up by a rod from the inside.

16,327. Urie, J., and Urie, J. Dec. 13.

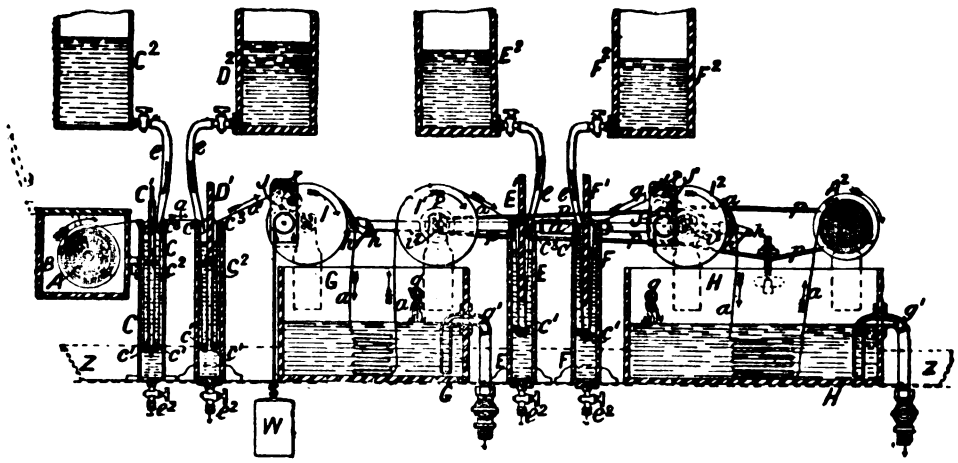

Clearing; developing; fixing; toning; washing.—Relates to automatic developing &c. apparatus. The photographic film *a*, after being printed under the negative, is wound on a reel A and placed in a dark box B. The continuous sheet of paper is drawn successively through the various chemical and washing baths by clockwork J, weights W, or other power. The form of bath preferred is a deep vertical bath such as C, through which the paper is caused to pass by guide-rollers *c*, c^1, c^2, c^3 in one or more undulations according to the length of time the bath has to act upon the paper. In the case of the baths E and F, there is one undulation and the frames E^1, F^1 are made movable. C, D^1, E, and F are developing, clearing, toning, and fixing baths respectively. G and H are intermediate washing-baths, the height of the water in which is regulated by siphons g^1, g^1. I, I^1, I^2 are the drawing and driving drums for pulling the paper through the successive baths. The drums may be actuated by clockwork J, J, or by other motive power, and belts *p*, *p* and cone pulleys P, P. C^2, D^2, E^2, F^2 are reservoirs for supplying the chemicals to the respective baths, by means of the flexible pipes *e*, *e*; e^2, e^2 are the draw-off cocks. *h*, *h* is a fork-shaped perforated pipe for washing both sides of the paper by means of jets. A^2 is the receiving-reel, on to which the damp paper is finally wound. The whole apparatus is placed in a shallow trough Z. Details in connection with the regulation of the clockwork &c. are described in the Specification, and also a modified form of bath.

16,356. Bershall, G. J. Dec. 14.

Printing.—The object is to combine several views in one photograph. This is effected by the use of a series of masks having a transparent portion corresponding in outline to each particular view to be printed on the combined photograph. The rest of the mask is rendered opaque by printing the surface with a suitable ink in a printing-press. The printing may be done first, and the required portion of the surface made transparent afterwards by varnish or other suitable means.

16,605. Coppin, H. Dec. 17.

Cameras; changing-bags; dark slides.—This back consists of a frame *a* into which a carrier *f* containing two plates fixed by cross-wires *g*, *g* and buttons is slid from the top. The frame *a* is fitted with the usual shutters at opposite sides and grooves for sliding it on to the end of the camera. A flexible bag may be fitted on to the end of the frame *a*, into which the carrier can be withdrawn and exchanged for another, with another pair of plates.

(*For Drawing see next page.*)

Digitized by Google

16,605.

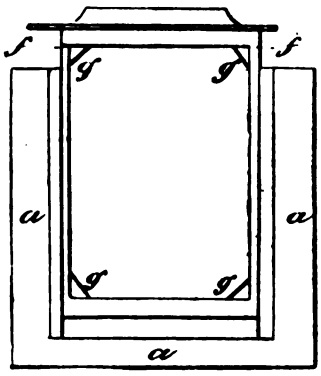

16,677. Berly, J. A., [*Alauzet, L.*]. Dec. 20.

Photo-mechanical printing.—Relates to collotype printing-apparatus. The printing-machine, Fig. 1, consists of side frames A between which is a sliding table C carrying a bed D for the block E upon which the glass plate containing the printing-surface is fixed by clips. The bed D is set horizontal by four regulating screws. The frisket is hinged to the side of the bed, and the tympan is attached thereto by clips, suitable registering-stops &c. being provided. The

FIG 2

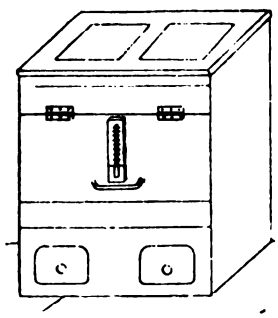

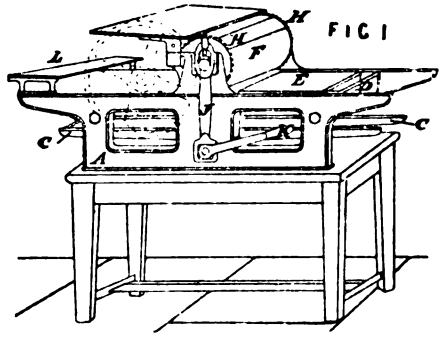

bed is reciprocated beneath the impression cylinder F, by racks thereon gearing with pinions operated by a crank handle, and these racks gear also with the wheels H on the cylinder. The pressure of the cylinder for printing is produced by a lever K with cams operating upon the rods J. L is an ink table for use with the hand roller. Sponges supplied from water troughs are provided for automatically damping the printing-surface. A modified form of machine is described in which some of the operations are performed automatically. The drying-stove, Fig. 2, consists of a box with two chambers separated by a horizontal iron plate. The lower chamber is for a spirit lamp or gas jets, and the upper or drying chamber proper is provided with cross-bars with screws for the glass plates to rest upon horizontally. In the top of the drying-chamber are two or more fine tissue panels which allow the moisture to escape and retain the heat.

A.D. 1887.

37. Husnik, J. Jan. 1.

Photo-mechanical printing.—Refers to gelatine relief plates. The sensitized gelatine is exposed and developed on the front side (the side exposed) by rubbing or brushing with liquids which dissolve gelatine at the ordinary temperature. It is preferred to use a solution of alkaline bichromates as a developing-agent. The development may be stopped before the finest dots and lines become

Digitized by Google

obliterated, and after drying, the lights are covered with a solution of printers' black in terebinthene by means of a fine hair pencil, and the plate then exposed again, so that it may be developed to any desired depth. Before developing, the gelatine plate is mounted and attached to a hard plane surface by means of gutta-percha or other adhesive and elastic substance.

541. Ashford, J. Jan. 13.

Cameras. — The object is to improve the means of folding the camera. The front A of the camera folds over and covers the back C. B is the baseboard to which the front and back are hinged. D represents plates to which the back C

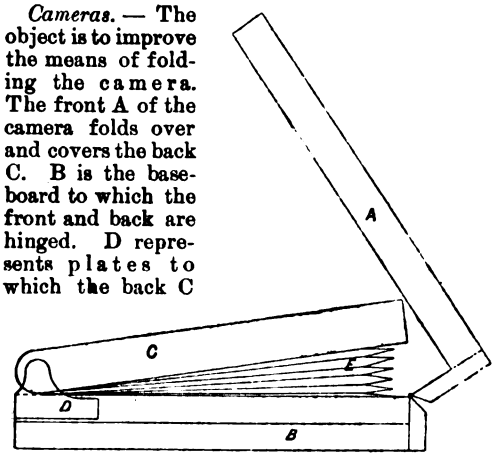

is hinged, and which slide on guide-bars on the side of the baseboard. The bellows E is detached from the front to enable the camera to be folded. The back C is first folded down and then the front above it, thus protecting the focussing-screen from injury.

789. Boles, W. H. Jan. 18.

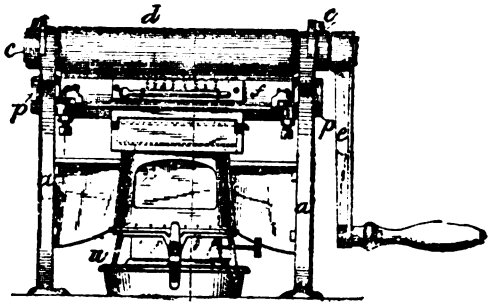

Finishing. — The burnisher *f* is open at both ends *p*, *p* and has an opening in the centre for the reception of the funnel of the lamp *u*. A thermometer is fixed on the side of the burnisher to indicate the temperature. The burnisher can be raised and lowered by a screw in a lever at one side, being supported on two fulcrum screws at the other side. The feeding-roller is roughened by a knurling-tool in the lathe. *a*, *a* are brackets which support the roller by the bearings *c*, *c*. *e* is the handle for turning the roller.

1079. Raymond, C. Jan. 24.

Photo-mechanical printing.—The printing-surface is of gelatine upon parchment paper &c., which is prepared as follows :— The gelatine is first placed in water to make it swell, and is then melted in a water bath and kept for 40 minutes at a temperature of 75° C. A little quantity of a saturated solution of alum and of borax are then added, and it is spread upon the parchment paper &c. as usual. It is dried in a stove at 25° to 30° C. For the preparation of the printing-surface the gelatinized paper is

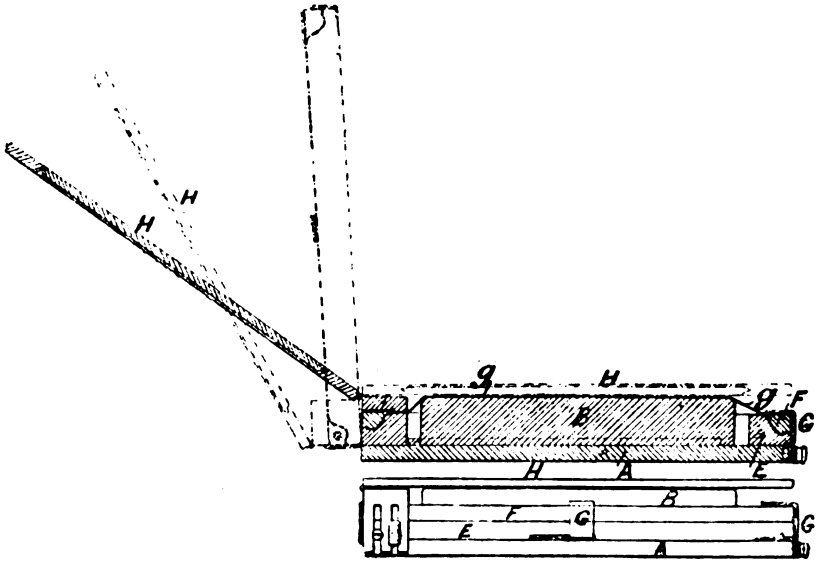

Digitized by Google

sensitized in a bath of bichromate of potash &c., and placed upon a talced glass to dry in the dark. When dry it is exposed in close contact with the negative of the picture or design. It is then developed by washing in water, and may be used for printing from directly in fatty inks. Before using, the printing-surface is put in water for a time to give it proper degree of humidity. It is then stretched in a frame hinged to the base A. The frame consists of two parts E, F between which the edges of the printing-surface *g* are secured. The two parts E, F of the frame are secured together by pivoted catches G. When the frame is lowered on to the base A the sheet *g* rests upon a block B which is surrounded by the frame. To maintain a moist state of the printing-surface, a sheet of wet paper &c. may be placed between in the block B. After careful inking the impression is taken by subjecting to pressure with a layer of felt and a board H upon the paper.

1533. Lancaster, W. J. Feb. 1.

Cameras. — The front or lens-carrying frame E is suspended between the legs of a fork F^3 to which it is clamped by the screws N^3, N^2. The fork F^2 is mounted on a platform or slide which works freely upon the sides of the tailboard I when unclamped by the screwed bolt L. The top of the platform F^4 to which the fork F^2 is directly attached slides on the part H like the top of a slide-rest, enabling a fine adjustment to be given to the lens by the long pinion G and pair of racks. H^3 is one of the claws which are clamped on the sides of the tailboard I by the transverse screw bolt L. The dark slide P is fixed by notches Q^4 in each of the corners. At the bottom of the camera back two plates Q^2 are attached, so as to slip into the lower pair of notches in the dark slide ; eccentric discs Q are turned round to enter the top notches and hold the slide firmly in position. The slide may be placed in position for a horizontal or upright picture. An inner carrier for the plates is fixed inside the dark slide. It consists of a metal frame hinged at one side, between which two plates are enclosed back to back, the whole being held in position by a spring slide in the bottom or end of the frame of the dark slide. A bellows extension is fitted over the focussing-plate, at the end of which is a lens and reflecting prism for magnifying the image and making it erect. The back part of the body O is connected to the front part B by slotted plates O^2, O^2 fixed by screws O^3, O^3. Slotted stays C give swing to the camera in the other direction.

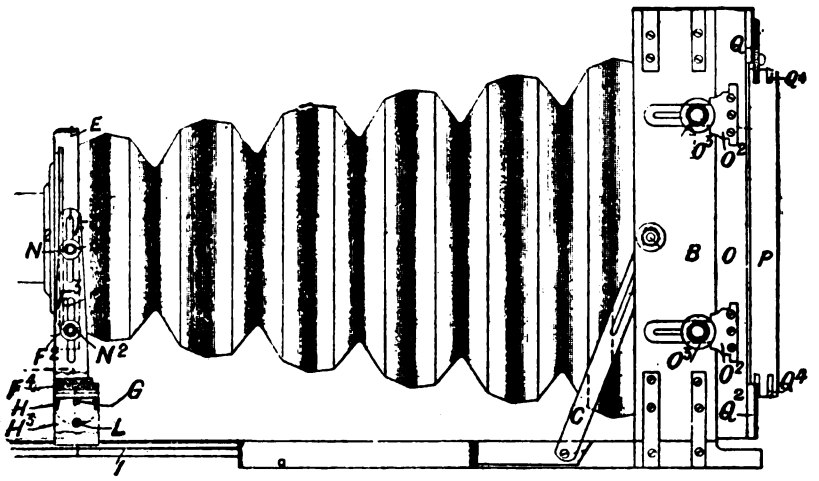

1637. Elliott, G. W. Feb. 2.

Dark slides. — The dark slide is constructed of tin or similar material. Pieces of the requisite shape are stamped out and then secured together. The Figure shows a transverse section of one arrangement. The back piece *a* has a depression *x* in the centre, to press the plate forward against the stops. *c*, *c* are pieces secured at each side in front, the inner edges being bent into the shape shown at *g*, *g* to receive the turned-over edges of the shutter *f* of the slide. *h* is the plate in position in the slide. Bent strips on the end of the shutter prevent it from being drawn too far out. The edges of the shutter may fit in grooves formed in the pieces *c*.

Digitized by Google

1681. Willis, W. Feb. 2.

Printing; developing.—Improvements in platinotype, in which the platinum salts are contained in the developing-solution. The surface is rendered sensitive by the application of a ferric salt, say oxalate, with or without the addition of a salt of lead or of mercury or of mixtures thereof, and without any salt of platinum. The developer contains salts of platinum with certain soluble phosphates (or other salts in which the ferrous oxalate image produced by exposure to light is insoluble), with or without the addition of potassium oxalate, potassium tartrate, ammonium citrate, or other salts which tend to increase the rapidity and vigour of the development.

1830. Moss, W. E., and **Mitton, J.** Feb. 5.

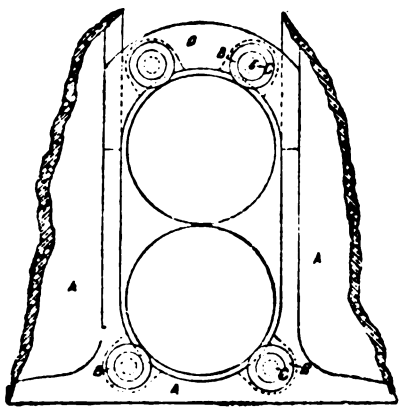

Finishing. — Relates to the bearings of the rollers of photographic rolling-machines. The ends of the rollers are supported at the bearings on smaller rollers B, B which turn on the axes C, C. A, A is the supporting-frame, and D is the sliding piece which presses down the top roller.

2012. Sershall, G. J. Feb. 9.

Printing artificial skies on photographs. A drawing of a sky is printed by lithography or other means on paper, gelatine, glass, or other suitable transparent material. A photographic negative is taken of a landscape or view. The part representing the sky is stopped out or rendered opaque. A print is taken from the unstopped portion of the negative, from which the blank portion corresponding with the stopped-out sky is carefully cut off to the edge of the landscape or view. The remainder is allowed to blacken in the light and is used as a mask. The process of printing is as follows :—The unstopped portion of the negative is first printed and then covered with the blackened mask till the sky is printed.

2042. Gotz, J. B. Feb. 9.

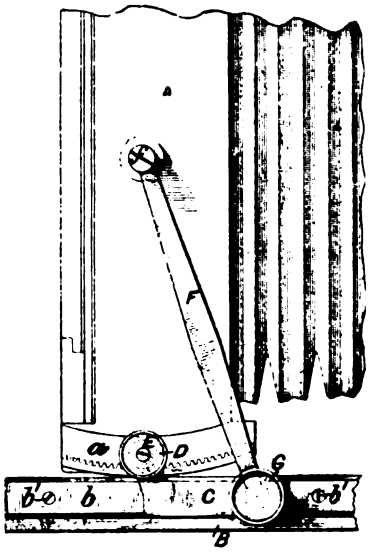

Cameras.—The body A of the camera is supported on a pivot *f* at the end of the link F, which is clamped at its lower end by a screw G to the slide C. The slide C works backwards and forwards on a rail or bar *b*, fixed to the side of the baseboard B by screws b^1. In order to turn the body A about a horizontal axis, curved racks *a* are fixed at the bottom of the camera body. These racks gear with pinions D, which are turned by the milled heads E, and are supported in bearings on the slides C.

2382. Perken, E. T. Feb. 15.

Shutters.—The piece *b* is twisted by the action of a spiral spring, which may be adjusted with more or less tension, on the axis *c*. Through the intervention of the links *d*, *e*, and *f*, the shutter slide *g* is raised and lowered during a half-revolution of the piece *b*. The piece *b* may be arrested at one quarter revolution by the action of the rod a^2 on the catch b^3; the shutter in this position remains open. The rod a^1, by entering the notch b^2, holds the shutter in the initial position ready for exposure. The rods a^1 and a^2 are jointed to the trigger-piece *a* which rocks on the axis $a^\times$. This trigger-piece may be actuated by a pneumatic piston in the cylinder *h*, or by the stops h^1, h^2 acting on the projection *a*, or the trigger-piece may be actuated by hand through the projection a^4. A catch *l* holds the shutter open for focussing.

(*For Drawing see next page.*)

Digitized by Google

2382.

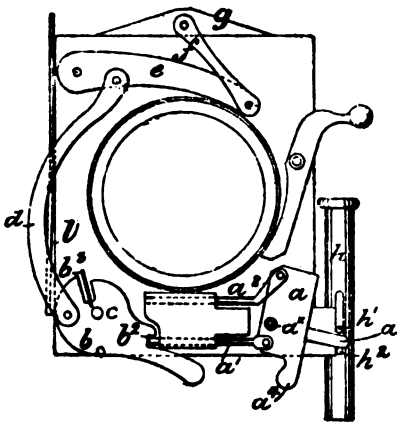

2634. Bishop, F. Feb. 19.

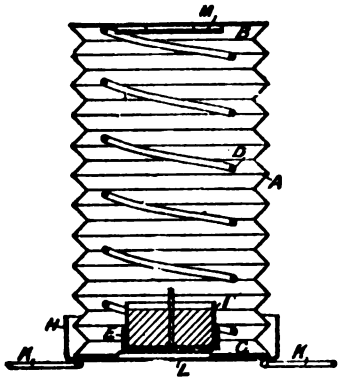

Lamps, dark-room, are made collapsable to facilitate packing for transport. The lantern is formed by a cylinder A of ruby cloth, connected at its extremities to metal plates B, C, and is normally kept distended by a spring D. The plate C has a central aperture to allow of its passing over the socket E on the stand H. The night-light or short candle is contained in a holder I, which fits into the socket E. When collapsed, the lantern is received by the stand H, and is retained therein by loops K, K. The pivots of these loops serve as feet for the stand, allowing air to enter the aperture L to feed the flame; the products ascend around the baffle M, and escape through an opening in the cap B.

2662. Warnerke, L. Feb. 21.

Sensitized films. — The paper on which the sensitive emulsion is carried is first coated with a sub-stratum of a soluble gummy nature, consisting of a mixture, in cold water, of dextrin, starch, casein, gum arabic, gum tragacanth, blood albumen, or other soluble gums. After the layer has been applied the surface is glazed by a calendering or other suitable machine. The glazed surface is now coated with three or four layers of sensitive emulsion, to give the film sufficient body to be used as a negative for printing without any additional support. After exposure the film is detached from the paper by soaking in water, and is squeezed on to glass for development. It is finally removed from the glass and used as a negative for printing in the usual way.

2763. Atkinson, R. E. Feb. 22.

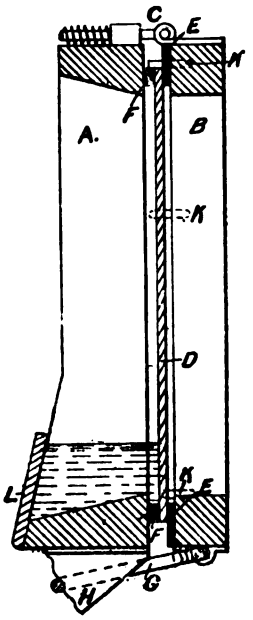

Developing; dishes.— The plate or film to be developed is made to form the bottom of the developing-dish. The sides or frame of the dish consist of two parts A and B hinged together at C by spring hinges. The photographic plate D is grasped firmly between two india-rubber cushions E and F when the frames have been closed together, and fixed by the spring locking-bail G and catch H. The cushion F is made thicker and narrower than the cushion E to give greater elasticity, and to enable it to be placed inside a series of pins K, K, K for holding the plate in position. By covering over one end of the dish by a plate L, a cavity is formed in which the developing-solution is retained while the dish is held in a vertical position for examination.

3139. Boult, A. J., [*Sichel, A.*]. March 1.

Sensitized plates; copying documents &c.; developing; positives, producing directly.—By this process positives or negatives may be produced directly, or surfaces suitable for etching. A resinate of a metal, say magnesia, is prepared from resin soap, coloured with aniline or other pigment, dissolved in benzol, chloroform, or other suitable solvent, and poured on the surface on which the photograph is to be produced. The sensitive surface thus prepared is then exposed in the camera or under the drawing to be copied. To produce a negative the

Digitized by Google

plate, after exposure, is treated with benzol, ether, or the like, which dissolve the parts not acted upon by light. To produce a positive the plate, after exposure, is treated with bleaching-substance, which affects the parts acted on by light. India-rubber solution may be added to the coloured resinate. The same process may be used to produce a surface for etching.

3270. Lauder, J. March 3.

Camera stands or supports.—The four-legged tubular framework b, b^1, with castors c, has a platform d suspended by cords e passing over pulleys f and connected to weights sliding inside the legs, which carries the camera. The platform, having rounded rubber-lined corners, is in two parts, acted on by a spring so as to grip the frame and released by pressing together the handles k.

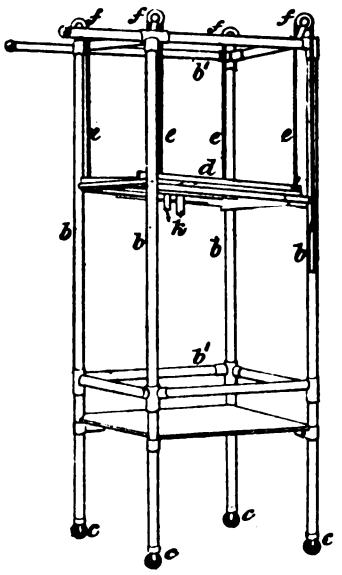

3530. Boult, A. J., [*Eastman, G.*]. March 8.

Sensitized films, manufacture of. The strip of paper to be coated is stored on the reel B. Thence it passes between two rollers at F, and under a roller dipping in the emulsion in the trough E. The paper thus receives a coating on its outer surface of the sensitive emulsion, scrapers being fixed above the coating-roller to prevent the emulsion from getting to the inner side of the paper. From the coating-roller the paper passes vertically upwards over a driving-roller I, then horizontally to J, downwards to K, across to L, and then upwards to another driving-roller M. The object of these movements is to spread the coating of emulsion uniformly on the paper before setting takes place. Q is a refrigerator to accelerate the setting. The web, after setting, is passed to the drying-rack, where it is suspended in loops. This is effected by feeding-rollers U under the web B^{11} by means of the endless band m, m. The roller U is carried up and deposited on another travelling horizontal band T^1 along with which it is carried with its loop of the paper. A succession of rollers at suitable intervals are thus drawn up by the band m from the inclined spout n, studs or stops being fixed on the band to support the rollers.

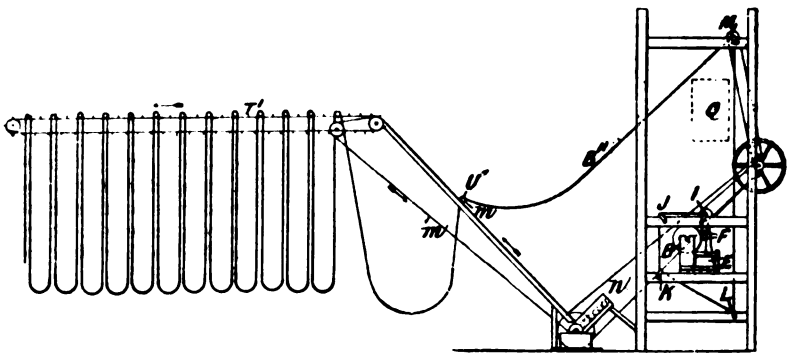

3922. Gotz, J. R. March 15.

Shutters. — The shutter consists of a rolling slide actuated by a crank disc C and connecting-rod. The crank-pin d^1 is held by the detent lever E, which is released by the pneumatic cylinder G and piston-rod g connected to a cranked lever with counterbalance h^2 and guide g^1. The crank disc is actuated by a spiral spring, which may receive different degrees of tension by twisting round the crank disc any number of times required by a peg on d^1. N is a supplementary spring brake for regulating

Digitized by Google

the rate of the exposure. L is a star-wheel which is acted upon by the pin of the crank disc and held by the spring M, and also registers the number of revolutions. A device is fixed for stopping the

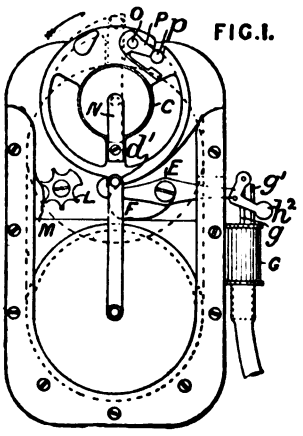

FIG. I.

shutter in the open position. The lever P is turned on its fulcrum o till the pin has described half a circle and rests on the circumference of the disc. The pin p then comes in contact with the catch lever E at half a revolution, thus leaving the shutter open. The spring F is used to retard the shock of the shutter coming to rest by the action of the crank-pin on its concave surface.

3998. Chary, F. J. March 16.

Lighting-arrangements.—An electric lamp is arranged above and behind the sitter; a large reflector A, which is shown mounted on its stand B, is placed in front of the sitter at such a height that the light from the lamp is thrown down on the sitter at an angle of 45°. A screen to diffuse the light is interposed between the sitter and the reflector, and another between the electric lamp and the sitter. For busts and half-lengths, a single lamp is used; for full lengths, two lamps are used and two reflectors, one somewhat smaller than the other and one above the other. For groups, three lamps are used, two side by side, and the light from the third is directed on the large reflector.

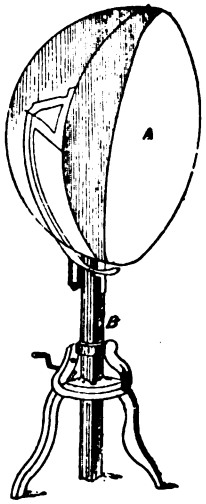

4202. Blackmore, G. F. March 21.

Racks for washing and draining plates. The plates are held by slipping them between corrugated or grooved sides A, A. These sides are held parallel to each other by bands of wire B, B which are fixed to the sides by staples C, C. D, D are the handles by which the rack is lifted. To fold up the rack when there are no plates in it, the two sides A, A are brought together like the two sides of a parallel ruler by turning on the wires B, B. E, E are stops attached to the grooved sides to prevent the plates from dropping through. Instead of the wires B, B flat bands may be used to connect the sides. Several grooved sides A, A may be combined to form a multiple rack; the connecting-bands may have knuckle joints.

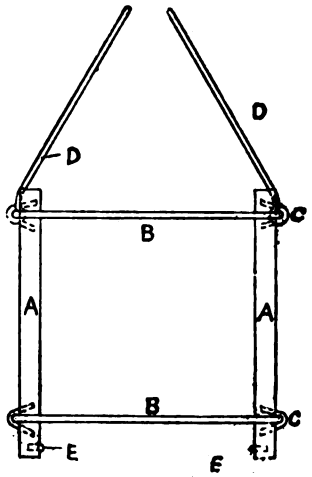

4270. Rouse, J. H. March 22.

Tripod and like stands.—The head or receptacle A, which may receive a lamp, is connected by a collar B to the tube C, which is closed at the bottom by a cap D. This cap carries a clutch formed by a braided-wire tube E, which grips the guide rod H. The crosshead I of the tube K slides in vertical slots in the tube. By depressing the collar of the crosshead the operator causes the flange L of the tube K to compress the braided-wire tube E, which expands, and releases its hold upon the guide-rod H. The tube C is then free to slide in the tube M until the tube K is released,

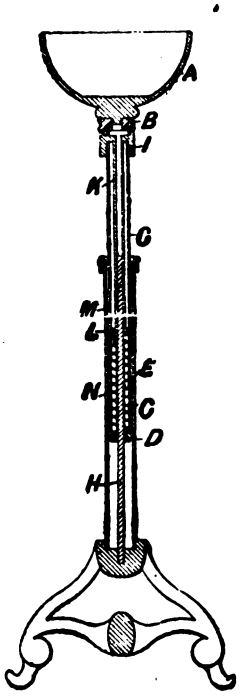

Digitized by Google

when the weight of the tube C and the parts attached thereto stretches the tube E, and causes it to clutch the guide-rod H. The tube K is normally supported out of contact with E by the spring N. The invention is applicable to flower holders, music stands, and other articles; or the head may form a shelf.

4710. Unge, W. T. March 29. *Drawings to Specification.*

Tripod and like stands.—Relates to a folding tripod stand for a telemeter of special construction. Each leg of the stand is jointed at the middle. The upper portion consists of two parallel bars, and the lower part of a single bar, which can be folded about the joint, and made to lie compactly between the bars of the upper part. The three legs can also be folded upwards so as to project above the head of the stand and form a protection for the pivot of the instrument, which is carried by the head.

4716. Cusworth, C. March 30.

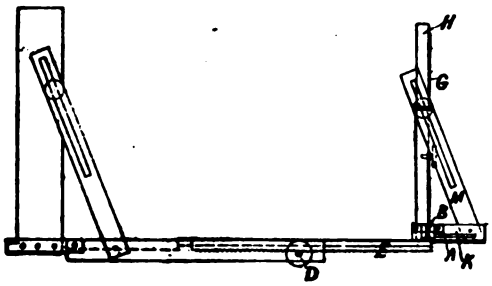

Cameras.—The principal improvements are in connection with the front of the camera. The front can be raised and lowered in the frame H, which is hinged to the slotted plates G. These plates are fixed at any point of the carrying-frame E by the action of the head of the lever A upon the block B. The face of the block and the end of the lever A are not square but inclined towards the horizontal plane in such a way that its thinner edge is next the plate K. By means of the slotted lever M the front may be set at any angle. D is a pinion for actuating the racks on the carrying-frame E.

4908. Sands, C., and **Hunter, J. J.** March 31.

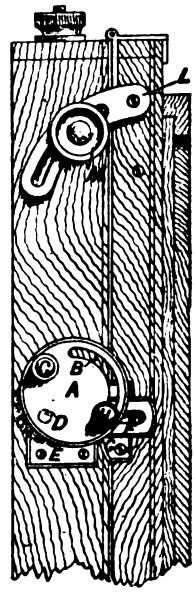

Cameras.—Relates to means of regulating and fixing the horizontal or vertical swing of photographic cameras. A disc A rotates on the stud D which is fixed to the camera body of the plate E. A screw H slides in a slot B in the disc A and also in a straight slot in the plate F, and is attached to the swing back or frame by the plate G. When the disc A is turned round by the knob C, the swing back is pushed out to the required extent by the action of the slot on the pin H, and clamped in position by H and by the slotted link L and screw M.

4915. Trenemen, W. April 2.

Colouring.—A photographic print is produced by the carbon or similar process. The print is mounted on collodionized glass to facilitate its after transfer. A coloured print is then made according to the method described in Specification No. 797, A.D. 1866, or as follows:—A glass transparency is made and varnished, or a carbon print is made from the original negative, developed on a flexible support, and mounted undetachably on glass. The transparency thus formed is varnished. A piece of strong paper is damped, and stretched over the film side of the transparency, and coloured with colours corresponding to those on the natural object. Fine lines on the print which may be difficult to register may be coloured in oil on the carbon film. When the colouring is complete the print is floated in a bath of gelatine and then cemented to the carbon print, which has also received a coating of gelatine. By leaving the paper longer in the hot gelatine it may be expanded if necessary to make it fit the print.

5080. Mayall, J. J. E. April 5.

Printing; colouring; printing-paper; sensitized plates and films.—The positive is printed on specially-prepared porcelain, paper, &c. The paper is prepared and used as follows:—Soak in a weak solution of gelatine and lactate of iron (say 2 grains of glue and $\frac{1}{16}$-grain of lactate of iron), dry and smooth, then float the paper for about 2 minutes in the following bath:—1 oz. of albumen, 4 grains of chloride of sodium, $\frac{1}{2}$-grain of bromide of potassium, 2 minims of glacial acetic acid, one drop of (say) salicylic acid, and colour to give suitable tint. Dry by slow heat and iron.

Digitized by Google

The sensitizing-bath is prepared as follows:—1 oz. of water, 40 grains of nitrate of silver, 10 grains of nitrate of soda, 3 minims of ammonia, and 5 drops of glycerine. Float the paper on this, dry, and fumigate with ammonia. The prints after fixing are soaked in a weak solution of sulphuric acid. The moist print is mounted on a piece of glass and the colours dabbed on. To protect from moisture the colours are covered with wax. The picture is then sprayed with a weak alcoholic solution of salicylic acid. It is then subjected to the action of finely-powdered soluble glass. The picture, moistened with (say) paraffin, is then pressed face downwards on a plate of glass having a coating containing powdered silicon, collodion and salicylic acid, and gelatine and salicylic acid. For printing on porcelain the material may be coated with collodio-chloride of silver or carbon tissue. The colours are ground up with phenic acid and silicate of potash.

5772. Wolff, L. April 20.

Mounting prints and the like.—The card mounts are coated with an adhesive coating of dextrin, glue, or other suitable material, which is allowed to dry. The photographs, after being dried by blotting-paper, are pressed on the moistened adhesive surface.

5903. Dallmeyer, T. R., and **Beauchamp, F.** April 22.

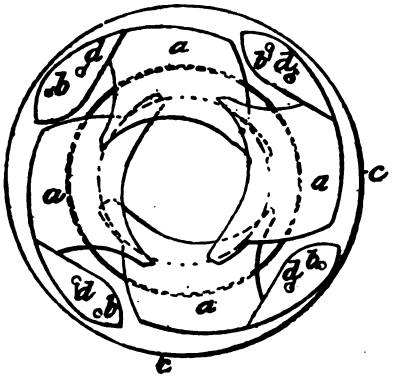

Shutters; lens fittings.—The shutter fits in the lens tube between the lenses. It consists of a number of segments of sickle or chopper-like form *a* mounted on pivots *b* fixed in the ring *c*. To each segment is a fixed pin *d*, which fits into and works in a slot in a movable ring, of such a shape that each segment receives by the rotation of the movable ring a movement to and from the centre. The shutter thus opens and closes at the centre, and has always an approximately-circular opening. The shutter is actuated by a lever outside the lens tube acting on a pin on the movable plate. In a modified form, instead of a pin and slot in a movable plate for each segment, one segment is made to actuate the other by a pin and slot, and one of the segments is actuated by the action of a crank-pin on a slotted lever fixed to the segment. The crank is actuated by a spring. The lens tube is in one piece, with a slot for each segment of the shutter.

5923. Martin, G. S. April 23.

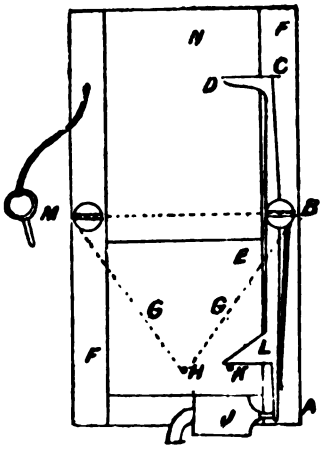

Shutters.—E is a sliding shutter which moves up and down in the frame F, F, uncovering and recovering the aperture of the lens. The shutter is raised by the elastic band G, G acting on the pin H. The sliding shutter is liberated by pushing back the end A of the lever A, B, C by the pneumatic device J or by other suitable means. By this movement of the lever the pin K is allowed to escape from the projection L. As the slide passes upwards the pin E pushes back the projection D, and is detained on the return of the lever by the upper surface until the pressure is released at A. For instantaneous exposures, a stop M is inserted at N to prevent the slide from being detained by the projection D.

6032. Edwards, R., [*Koppe & Moh*]. April 25.

Changing-bags; change-boxes.—The sensitive plates are carried in a flexible bag, the mouth of which is closed by a flexible band *b*, round the mouth of which is a stiff metal frame *a*, which is connected to the bottom of the dark slide. The elastic band is then removed and the plate is pushed up into the slide or change case. A change case is combined with the frame of a size suited to hold larger-sized glass

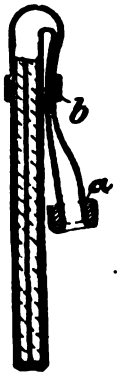

Digitized by Google

plates. The plate is advanced by a rotary wedge action towards a band in front, which adjusts the plate in position. Two sensitive glass plates are arranged upon a sheet-metal plate, one on each side, the sides of the said metal plate being bent over alternately to hold the said glass plates.

6076. Clark, W. April 26.

Cameras; shutters. — The improvements are principally applicable to instantaneous cameras, and consist of a device for focussing with the sensitive plate in position, combined with a means of making an instantaneous exposure. The lens B is preferably concealed. H is a drum which can be rotated inside the camera on a vertical axis with bearings below G and in the lid D, the upper axis being connected to a friction-wheel K to regulate the rotation of the drum. A mirror E is fixed at an angle of 45° at one side of the drum, to throw the image from the lens upon the focussing-plate F, which is held in a horizontal position at a distance corresponding to that of the plates in the holder *c*. To expose, after focussing, the drum is allowed to rotate, under the action of a spring, till an aperture *h*, in the side of the drum, comes opposite the lens, when the image, for a moment, falls on the sensitive plate. The focussing-plate F is supported in the required position by the rods *m*, m^1, m^2, and can be folded down when not in use, together with the lid L. The inner lid D is retained in place by a projection on the plate-holder.

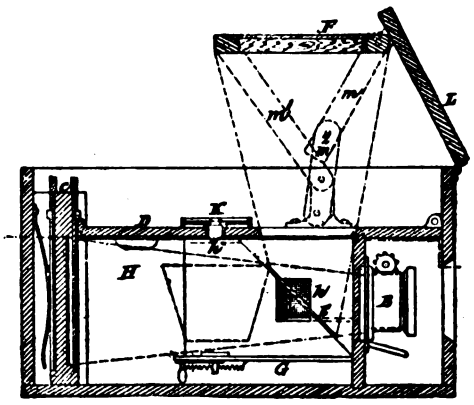

6353. Grimston, W. April 30.

Washing; trays.—Relates to washing photographic prints and plates. The washing tray or receptacle is made of perforated or reticulated material such as perforated galvanized iron, or woven wirework, papier mâché, or earthenware. The washing-water is caused to pass through among the prints and out through the sides of the receptacle.

6398. Burton, H. J. May 2.

Sensitized plates, coating. The emulsion passes from the reservoir V into a V-shaped trough T, from whence it passes through a muslin bag M at the bottom of the trough on to the plates to be coated. G are inclined planes or guides by which the trough T is raised to suit the thickness of the plates to be coated. The coated plates are carried forward by an endless band A on the pulleys B, B, from which they are transferred to the band C, carried on pulleys D, where the sensitive film is allowed to set.

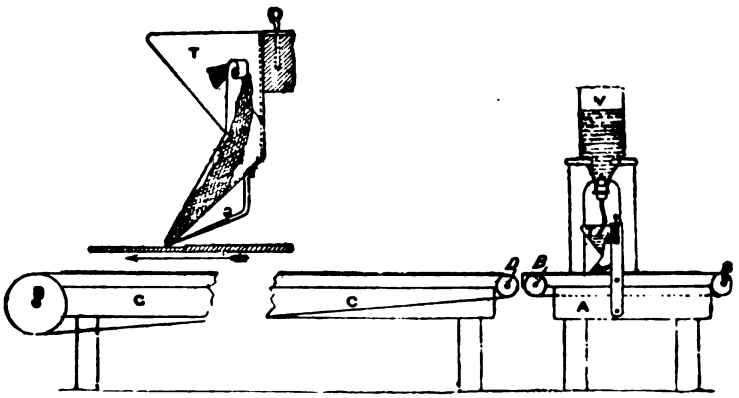

Digitized by Google

6459. Johnson, W. D. May 3.

Tripod and like stands for surveying-instruments, cameras, &c. The table I has a plate H which screws on to a head having a convex surface f^2, resting on the concave surface A of a fixed plate with lugs *a* to which the legs B are jointed, a central spindle F, with thread *f*, working in a tube C^1 projecting from the cup C, and receiving another cup E. The edges *e*, *c* of the

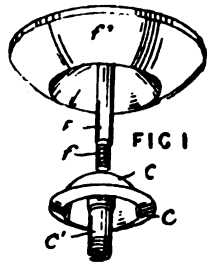

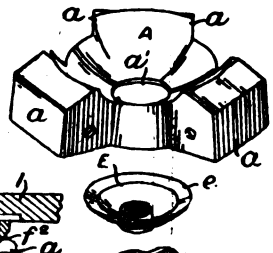

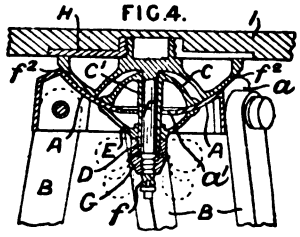

cups E, C are caused to grip the plate A by a winged nut D. When the table is levelled, the aperture a^1 allowing sufficient play for the spindle F and tube C^1, the parts C, E are made to clamp the fixed plate A, and the head, with its spindle F, then gives a horizontal rotary adjustment quite independent of the levelling-arrangement. The spindle F may be clamped by the winged nut G.

6613. Rouch, S. W. May 5.

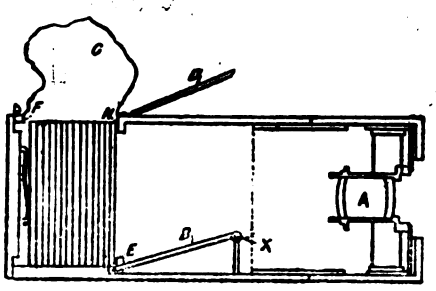

Cameras; shutters; change-boxes.—Relates to detective cameras and fittings. The lens A is fixed inside the camera box. The exposure is effected by a blind shutter with aperture which passes over the opening of the lens. The blind is alternately wound on and unwound from rollers placed at opposite sides of the lens. The sensitive plates are placed in a change-box behind the camera. The front plate E, after exposure, is raised by a lever B actuated by an axis X placed near the centre of the camera. When the plate is raised through the aperture it passes into the flexible bag C of suède leather, where it is held from the outside and passed through the aperture F behind the plates. D is a lid which covers up the flexible bag when it is not in use.

6673. Boult, A. J., [*Connon, J. R.*]. May 6.

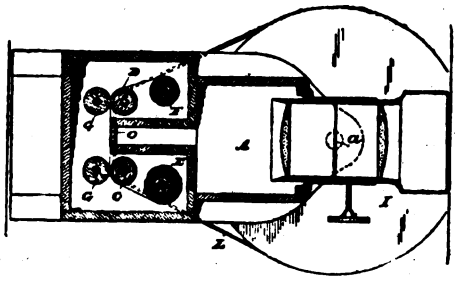

Cameras specially applicable for panoramic views. The camera is made to rotate on an axis *a* passing through the optical centre of the lens and fixed on the tripod top I. The sensitive film passes, say from E to F, over the rolls C and D in front of the slit O, through which the image from the lens falls upon it. G, G are rollers which press the film against C and D. As the camera is turned about the axis *a* the sensitive film receives the required motion by the cord L, which passes round the stationary tripod top.

6780. Deans, J. W. May 9.

Tripod and like stands.—Relates to music and like stands. The stem is tubular and forms a casing for the feet. The outer tube *a* has at its lower end a boss *b*, internally screw-threaded at b^2 and with its underside b^1 dished. The three feet *d* are jointed by pins c^2 in grooves in a screw plug *c*, c^1 which fits the boss *b*. When in use, the plug is screwed home, pressing the feet *d* against the dished part b^1 holding them in position; when not in use the feet *d* are turned up and passed, their outer ends first, into the tube *a*, and the plug again screwed home.

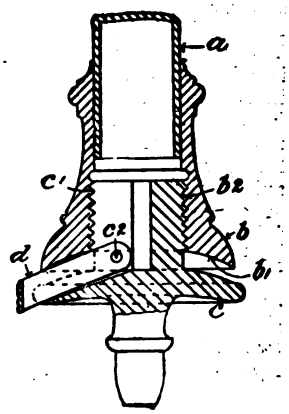

Digitized by Google

7035. Gaedicke, J., and **Miethe, A.** May 13.

Lamps; lighting-arrangements.—Magnesium reduced to a fine powder is mixed with oxygen-yielding salts, as, for instance, chlorates, nitrates, &c., as well as with substances that accelerate the combustion, such as prussiate of potash, amorphous phosphorus, sulphurous and other combustible materials, pine soot, &c. These substances are well pulverized and mixed or rolled together till a fine grey powder is produced. The mixture is ignited by an electric or other spark. About 10 per cent. of sodium, calcium, or strontium is added to colour the light and facilitate the photographing of certain colours.

7121. Downing, G., [*Berthon, L. M.*]. May 16.

Cameras, focussing-devices and finders for. The device is fixed above the camera and consists of an eye-piece or aperture M and a pair of levers resembling a pair of dividers turning on the centre A. The movable part of the lens, for focussing, L, is connected by a series of levers E, S, *j*, B, B to the dividers, so that when L is moved by turning *x* a proportional movement is imparted to the legs of the dividers. To adjust the device, the points of the dividers are made to cover the extreme limits of an object of known height, such as a man of average height, while the object is at the same time in focus with the lens.

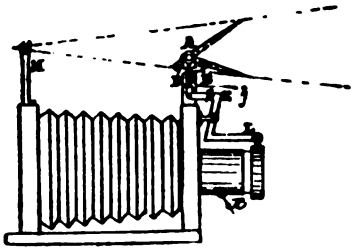

7464. Prescott, T. May 23.

Cameras.—The front is connected to the back of the camera by lazy-tongs framing *a* at each side of the bellows. These lazy-tongs are connected at each end by fixed central pivots *c* and *d*, the ends *b*, *b* and *e*, *e* being free to slide in guides. The slotted bar *h* is guided by a pivot in the curved slot *k*, so that the end l^1 moves in a straight line parallel to the axis of the camera. A cross-bar *o* is joined at each end to l^1; to this bar at its centre is attached a ring *n* with a flange which fit into semicircular recesses below the camera body. The camera body can be turned round on this ring, which forms the top of the stand. In a modified form a telescopic baseboard is used instead of the flanged ring *n*. To shorten or lengthen the camera the ends *b*, *b* of the lazy-tongs are approximated and separated by two endless bands passing round the pulleys *v*, v^1, &c., two of these being connected by toothed gearing. By means of the pinion y^1 and rack *y*, which slides in a groove, horizontal swing is given to the back.

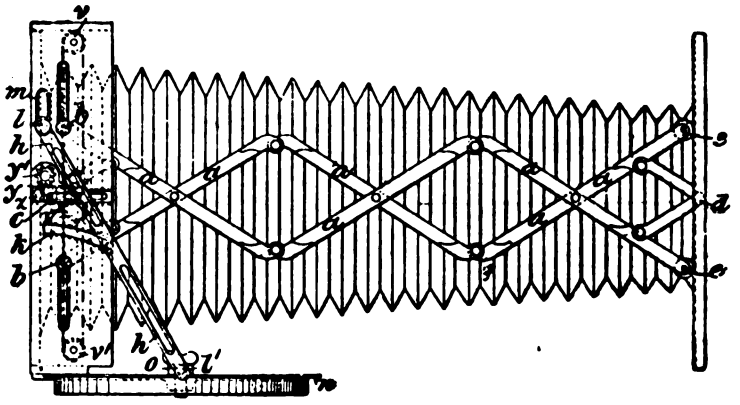

7790. Boult, A. J., [*Crocker, H. S.*]. May 28.

Cameras, pin-hole. The camera is made of paper or other suitable material folded like the bellows of a camera as at E. A sensitive plate P is placed in each camera, and covered by a back C. Instead

Digitized by Google

of a lens is used a pin-hole A in a diaphragm D attached to the front B of the camera. The

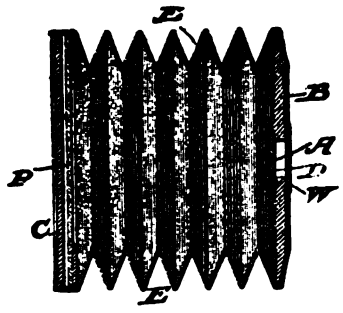

aperture is covered by a wafer W before and after exposure.

7980. Klic, K. June 2.

Photo-mechanical printing.—Relates to the preparation of pictures which may be used to produce photographic printing-surfaces. Paper, which has been previously enamelled or coated with chalk, baryta, or zinc white, has a slight grey opaque uniform tone, tint, or colour printed upon it. When the light grey coating is dry, the surface is embossed or impressed with intaglio points or lines. The grey colour forms the half-tone of the drawing, the dark tones being produced by pencil or Indian ink, and the light tones by scraping.

8711. Dallmeyer, T. R., and **Beauchamp, F.** June 16.

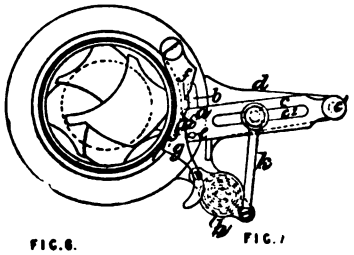

Shutters.—Where a movement in one direction only is required, it is imparted by a spring barrel, on the cover *h* of which is a crank-pin, which imparts motion to the lever *c* through the connecting-rod *k*. The end of the rod *k* can be fixed to the lever *c* at different distances from the fulcrum by moving it in the slot c^3, and the rapidity of the exposure will thus be regulated. The shutter is started by the trigger *g*. The stud *e* on the lever *c* fits into either of two notches *f* and f^1, according to the speed of exposure required. Where a reciprocating movement is required the apparatus shown in Figs. 6 and 7 is used. F is the lever which actuates the shutter. To this a rapid reciprocating motion may be imparted, or a slower movement for long exposures. For short exposures a projection D^2, Fig. 6, on the slide D imparts motion to F by pushing forward the projection G^1 on the frame G, which is connected to the lever F, which latter is t' en brought back by a spring. For slow exposures the projection G^1 is displaced, so as to come under the action of a lever K, Fig. 7, which is actuated by a cam L. This gives rapid opening and closing with long period open.

8998. Cross, A. K. June 24.

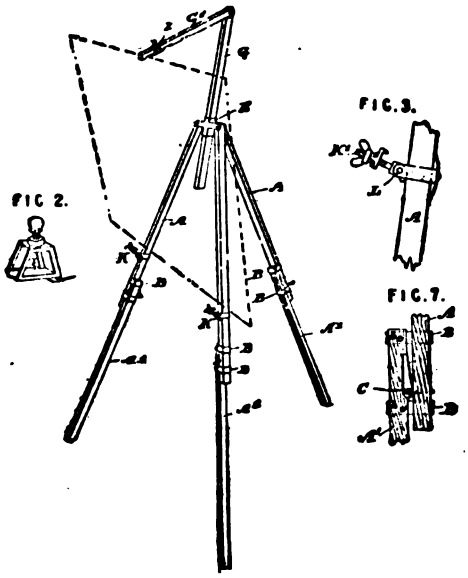

Tripod and like stands for easels. Three legs A are pivoted to a casting E through which passes a rod G secured by a thumb-screw. The rod is jointed in the middle, the part G^1 being notched and provided with a sliding piece I, Fig. 2, for securing a drawing-board or canvas shown in dotted lines. The legs A are in two parts, the lower A^1 carrying two bands B, B in which the upper parts slide; they are secured or released by turning a pin C oval in section, Fig. 7. The canvas is supported on pieces K which are adjustable and secured by the pins K^1, Fig. 3. Each pin is pivoted as shown at L; hence the heavier the canvas the tighter the grip.

Digitized by Google

9159. Bartos, J., and Kühn, H. June 28.

Photo-mechanical printing. — Relates to the production of relief or intaglio surfaces from photographs. The plate to be prepared is polished and covered with varnish, which may consist of 2 parts of shellac in 100 parts of alcohol, or of 2 parts of asphaltum, 10 parts of chloroform, and 3 parts of benzene. On this layer of varnish a pigment photograph is transferred and developed and treated with alum and glycerine &c. The plate thus prepared is subjected to the action of sand projected against it. This gradually destroys the photo-relief and forms perforations &c. in the varnish, and the plate is then etched to produce a grained printing-plate.

9402. Tylar, W. July 2.

Racks for washing and draining plates. A folding skeleton frame *a*, a^1 is made of wire or thin metal. The sides *a*, a^1 are hinged to the draining-trough *b*, and are connected together by cross-bars. *d*, *d* are the handles of the frame. Division studs *e*, *e* for separating the plates are fixed to the horizontal bars *f*, and a row also runs along the centre of the bottom of the frame to keep the bottoms of the plates separate. Each of these studs is covered with india-rubber to prevent the plates from coming in contact with the metal.

Plate boxes.—In some cases the trough may be dispensed with, and the rack may be covered with wood and used as a plate box.

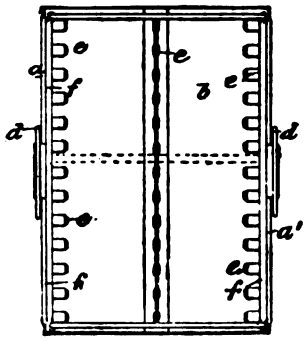

9948. Watson, T. P. July 15.

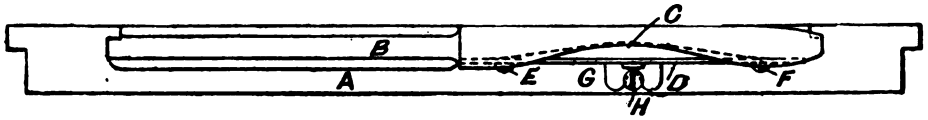

Dark slides; roller slides; shutters.—Relates to a spring fastener for holding the shutters of dark slides or roll holders, and preventing them from being inadvertently drawn out when removing the dark slide from the camera. The fastener is wholly outside the frame of the dark slide, and thereby obviates the risk of "lighting" the plates or films. A is part of the frame of the dark slide, and B the sliding shutter. On one side of the part C, by which the shutter is pulled out, a concave recess is formed, across which is placed the spring D, which is fastened at each end by the screws E and F, the hole in which the screw F fits being slotted to allow the spring D to be pressed back into the concave recess when necessary. To one side of the spring D is attached a notched plate G, the notch being intended to slip under the head of the screw H and serve as a latch to hold the shutter. Modifications of the plate G and screw head H may be adopted.

9949. Sengel, E. A., and Dobler, L. F. July 15.

Sensitized films; printing-paper, substitutes for. Relates to gelatinized cloth consisting of suitable cloth coated on one or both sides with a concentrated solution of gelatine, rendered insoluble in water by bichromate of potash or other suitable material. The solution may contain inert bodies in suspension for imparting colour, rendering it opaque or sensitive to light, &c. The cloth serves as a substitute for paper for photographic proofs.

10,103. Collins, T. J. July 19.

Cameras.—To facilitate the movement of the front or back, they are attached to sliding saddles designed so that they can be easily clamped to the guides at any point. The Figure shows the front A

Digitized by Google

connected in this way. C is a guide consisting preferably of a flat plate with one edge bevelled. The saddle-piece D, which slides loosely on this, is split at one end, and fitted with a clamping-piece G, which is pivoted at g. A pin g^2 on the other side of the saddle fits through an eccentric slot g^1 in the piece G. By turning round the piece G, the two split sides of the saddle are forced together and clamped to the guide. The saddle-pieces D are sufficiently slack on the guides to allow a displacement necessary to give horizontal swing to the front. For vertical swing, the front is hinged to the saddle-pieces by pivots which enter sockets E fixed on the saddle, and clamped at any required angle to the vertical plane by the slotted bar F, which is pivoted at f to the saddle-piece.

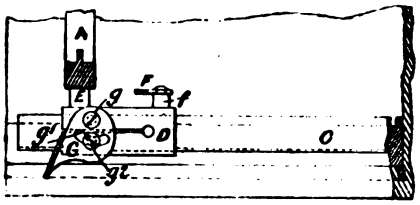

10,814. Shawcross, H. J. Aug. 6.

Copying documents, drawings, &c.; sensitized plates and films.—The object is to obtain copies of drawings, designs, &c. when depicted on a translucent medium, by the action of light. The copies are in black lines; or sometimes a coloured picture on a white or coloured ground is produced. The invention is based on the fact that a ferric salt, such as iron alum, when mixed with an organic acid or other organic substance, such as gelatine, forms, previously to the action of light upon it, a perfectly-insoluble film. When exposed to light the ferric salt becomes ferrous, and the mixture becomes soluble, and incapable of being stained by gallic or tannic acid, catechu, sulphocyanide or ferrocyanide of potash, &c. A sensitized coating is formed of a composition of gelatine, tartaric acid, and iron-alum in water, to which a little alum may be added. Paper, cloth, glass, or any other suitable support may be used for the film. The developing-substances may be in solution or rubbed into the film; the colouring-matter may be embodied with the film. For black lines, a developing-solution containing tannic acid is used; for blue lines, ferrocyanide of potash.

10,841. Berry, J. L. Aug. 8.

Tripod and like stands; cameras, stand attachments for. Relates to a combined tripod head and clamp for cameras, which is attached to the bottom of the camera by a screw. Two of the arms C, C of the tripod top are hinged at the centre and fold up into the position D, D. The usual studs F, F are furnished for attaching the tripod legs. To form the clamp, one of the limbs C of the top is prolonged and bent down, the end forming a nut for the screw H. The object, such as the bar of a gate, to which the camera is clamped is gripped between the end of the screw H and a downward projection of the plate B. Either the folding top or the clamp may be used separately; thus the latter may be fixed to a support similar to a gun stock.

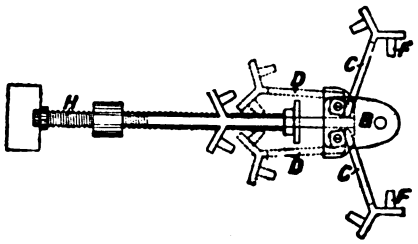

10,844. Kennerell, J. Aug. 8.

Cameras, stand attachments for. Relates to a supporting-clamp for cameras. The object, such as a wall J, on which the camera is to be fixed is held between the two screws H and H^1 fitted with cramp pieces K and N. The piece K is fixed on the end of the screw by the pin L. M is a jam nut for fixing the screw H^1 to the arm B of the clamp. The camera is attached to the top board D, which is fixed by a dovetail piece C to the top U of a dumb-bell-shaped piece having two knuckle-joints E and F at right-angles, and fitted with fly-nuts G. The base P of the dumb-bell piece is attached by a similar dovetail joint C, O to the frame A of the clamp.

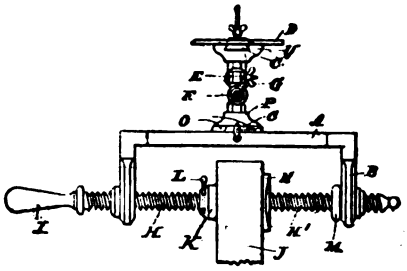

Digitized by Google

11,135. Bogaerts, H. Aug. 15.

Photo-mechanical printing. — Relates to a method of reproducing designs in imitation of woodcuts. Drawing-paper is impressed with lines, and these filled with black (Indian ink mixed with gelatine &c.), and is then covered with three or more coats of white (which may be zinc white or other pigments). Other lines are then impressed, which vary according to the designs, such as foliage, sky, &c., and the design drawn upon these lines. The parts not used for this drawing are then scraped to remove the coating and expose the lower lines as required. The Figure represents a design thus prepared, in which the building is drawn upon lines impressed in the coatings, and the sky produced by scraping away the coating to expose the lower lines. In some cases a single impression of curved lines may be used, and these are impressed so as to form a series of sharp angular ridges. The designs are reproduced by zincographic or other printing process.

11,136. Bogaerts, H. Aug. 15.

Photo-mechanical printing.—Relates to a method of producing by zincography imitations of wood, copper, and steel engravings. An image of the object to be reproduced is projected upon a sheet of caoutchouc, paper, or gelatine, &c., stretched in a frame, the sheet having previously been prepared with lines, such as are employed in wood or other engraving. The lined image thus produced is photographed for the preparation of the zincographic or similar printing-surface. The caoutchouc &c. may be stretched to vary the distance of the lines apart. In the imitation of copper and steel engravings, lines, crossing those on the sheet, may be projected with the image.

11,454. Lyne, E. H. B. Aug. 23.

Washing prints. The prints are placed on a layer of marbles F on the bottom of the washing-tank. A vessel B is connected with the washing-tank by the pipe J. When the water has risen to the required height in the washing-tank and in the vessel B, the float A comes in contact with a stop D on the wire W, and thereby opens the outlet valve G, which is held open by the counterbalance C till the tank is empty. The vessel B is attached to the tank by the bracket S and flange R.

(*For Drawing see next page.*)

Digitized by Google

11,454.

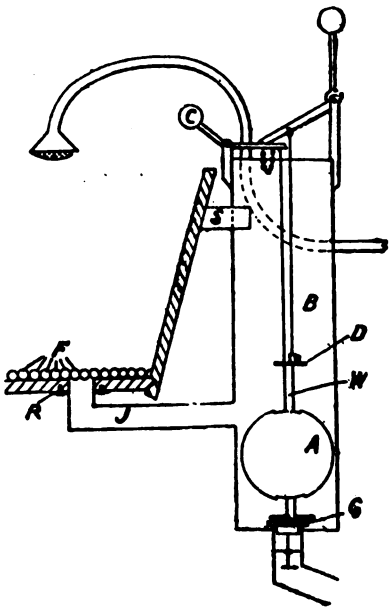

11,985. Harcourt, A. G. V. Sept. 3.

Photometers, standard lamps for. The lamp consists of a vessel *a*, similar to that employed in a spirit lamp, placed in a stand *b* with levelling-screws *c*, a plumb-line being used to obtain a correct vertical. A cap *d* fitted with an ordinary wick-raising appliance *f* carries the wick-tube *e* which is surrounded by a jacket *g* through which a steady supply of warm air passes, causing a very stable flame. A gallery *j* mounted on the cap *d* supports the chimney *k*, which is contracted at k^1 to a mean between the diameters of the tubes *e* and *g*. An extension *l* of the chimney, widening at its upper end, is connected to the part *k* by metal straps *m*, and the opening between the parts *l*, *k* can be adjusted by screws or by gauging collars of various sizes. When the top of the flame is visible in the slot *o* of the extension *l*, a standard light of one half, one, one and half, &c. candles is given off from the lamp according to the adjustment of the opening between *l* and *k*. The oil burnt is preferably "Pentane," which volatilizes and burns with a bright steady flame without charring the wick.

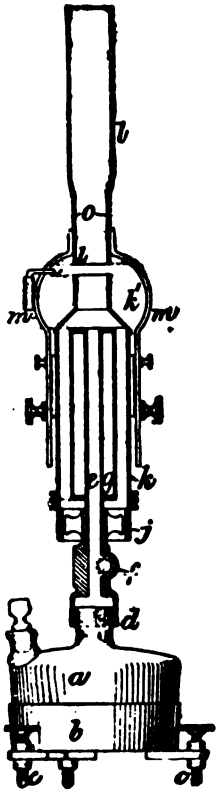

12,168. Bay, G. Sept. 8.

Copying drawings &c.; clearing.—Paper, coated with a solution of gum arabic, tartaric acid, and perchloride of iron, is exposed under a tracing, or negative, or other suitable drawing. It is then developed in a solution of prussiate of potash and colouring-matters, which produces a copy in black or other coloured lines. The print is washed and cleared in a bath containing salts of ammonia, soda, or potash.

12,191. Newman, A. S. Sept. 8.

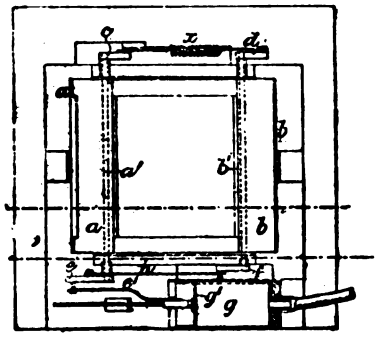

Shutters.—The shutter is placed inside the camera and behind the lens. It has two flaps *a* and *b* opening inwards and turning preferably on vertical axles a^1 and b^1. On the upper ends of the axles are fixed cranks *c* and *d*, and on the lower ends cranks *e* and *f*. The cranks *c* and *d* are connected by a spring rod *x*, and the cranks *e* and *f* by a rigid rod *h*. The cranks *c* and *d* are not parallel, but set at such an angle that the spring connecting-rod *x* will keep the flaps of the shutter in the opened or closed position by their action on the cranks at their dead centres; the cranks *e* and *f* are also set and connected by the rod *h* so that both flaps open together like folding doors. The shutter is actuated by a pneumatic cylinder and piston *g* and g^1, the piston g^1 being connected to a pin on the crank *e* through a connecting-rod e^1 by the pneumatic cylinder *g* operated in the usual way. For rapid exposures pressure and vacuum are created in the cylinder in rapid succession. For slow exposures the shutter is opened by pressure and closes slowly by the leakage of the air past the piston.

Digitized by Google

12,275. Tylar, W. Sept. 10.

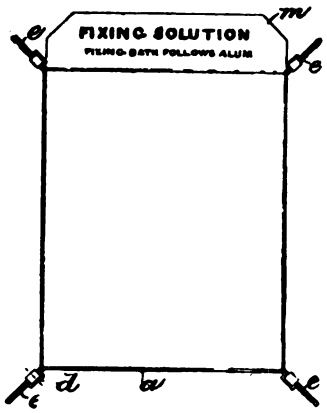

Developing; fixing; dishes. — Dishes for developing, fixing, &c. are made of sheets of pliable waterproof materials, such as "Willesden" paper. The sheet of paper *a* is scored in a suitable manner and folded into the shape shown. The corners *e* are held together by clips *d*, consisting of a bent piece of metal held by a rivet. On one side of the dish a flap *m* is left for displaying matter of instruction or guidance in the use of the dish.

Lifters or holders for plates.—Plate-lifting frames are made of metal, vulcanite, or other waterproof material for supporting the plates in the baths and lifting them out when necessary, for example, to transfer from one bath to another. The frames are provided with handles which may be detachable.

12,292. Marriott, A. Sept. 10.

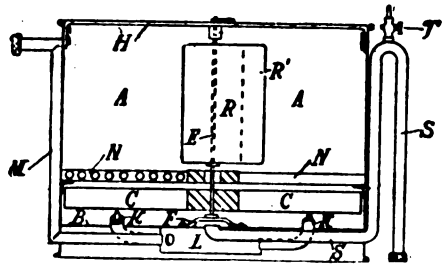

Washing prints. The prints to be washed are placed in the upper compartment A, A of the washing-apparatus. The bottom of this compartment N, N is made of inclined sectors, between which the water is driven up in waves by the wheel C, which turns round in the lower compartment B. The wheel C, C is driven by inclined jets K, K supplied from a central cistern L, which is in turn supplied by the pipe M. S is a siphon pipe for discharging the cistern, which may be converted into an overflow pipe by opening the vent cock T. To prevent the prints from collecting in the centre a cone or cylinder R, with projections R^1, is mounted on a vertical axis E in the upper compartment, which axis is in continuation of the axis of the wheel. The axis is mounted on cross-bars F and H at the top and bottom. The passages between the inclined vanes are covered with perforated metal or wires to prevent the prints coming through.

12,521. Brown, J. Sept. 15.

Sensitized films.—A support consisting of paper or other flexible material is coated successively as follows:—First, a layer of gelatine rendered insoluble; second, a layer of liquid caoutchouc or india-rubber, to which mineral oil or grease or wax has been added; third, a solution of cotton wool (prepared with acid), in ethereal alcohol; fourth, a solution of gelatine either clear or coloured, which may, however, be omitted; fifth, a layer of bromide of silver emulsion. After the photographic picture is imprinted, and coloured if required, the film is transferred to a rigid support, and the flexible backing pulled off.

12,733. Endean, T., and Clark, F. G. Sept. 20.

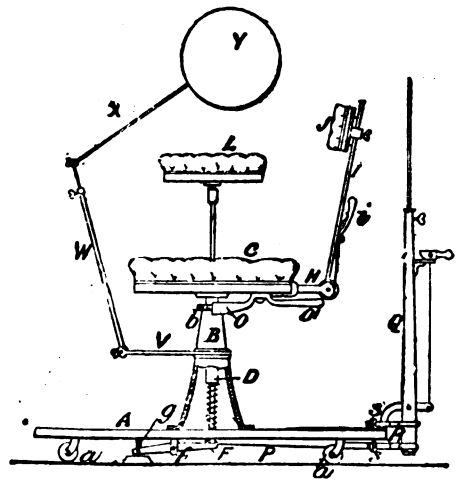

Studio accessories; head-rests. — Relates to a combined chair, head-rest, and screen. The seat C is carried on a spindle D working in a standard B on a platform A with castors *a*. A brake on a lever F *f* is pressed on the ground by a spring *g* when the seat is unoccupied, but on occupying the seat the brake is raised and the platform may be moved. The rotating seat is held in position by wheel *b* and pawl *o* o^1. The back rest J is adjustable on the stem I, having ratchet H and pawl *i*. The head-rest Q has a circular motion, being carried by a radius bar P having wheels *s*, *s* running on tracks on the platform. Y is a screen having arms X, W, V giving a variety of adjustments. The arm-rest L has several adjustments, and may form a seat for an infant, in which case a bracket is fixed to the stem R, and rests for the head and hips of the child are clamped to it.

Digitized by Google

12,940. Branson, F. W. Sept. 24.

Shutters. — Relates to an instantaneous shutter of the drop and flap type described in Specification No. 2767, A.D. 1884. The object is to secure greater portability by reducing the dimensions of the upper part of the shutter. This is effected by placing the bar *p*, which supports the drop shutter, at a distance from the bottom of the shutter, instead of at the bottom, as in Specification No. 2767, A.D. 1884. A claim is also made for the use of this improved shutter in combination with the pneumatic attachments in Specification No. 5386, A.D. 1886, and also for dispensing with the weighted lever described in Specification No. 5386, A.D. 1886.

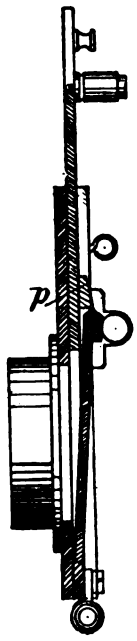

13,186. Elliot, J. M. Sept. 29.

Shutters; lens fittings.—This apparatus consists generally of a pair of reciprocating perforated slides with actuating, regulating, retaining, and releasing mechanism, which may be used as a shutter for long or rapid exposures, or as an adjustable lens diaphragm. The shutter may work in the diaphragm slit, or be placed in front of the lens. The two reciprocating slides B and C are actuated by a pin *e* which is fixed on a transverse moving slide E^1 and slides freely in slots inclined in opposite directions in the slides. A crank-pin e^1 on the disc *f* works in a curved slot e^2, e^{11} in the transverse slide E^1. The disc *f* is actuated by a spiral spring connected to its axle f^2. The regulating-mechanism consists of two parts, one for regulating the size of the maximum aperture of the shutter, and the other for regulating the length of the exposure. The maximum size of the aperture is determined by the stroke of the transverse slide E^1, and this can be regulated by adjusting the position of the axle f^2 of the crank disc, which is carried on a transverse slide. The length of the exposure is regulated by giving more or less tension to the spiral actuating-spring. For long exposures a stop pawl *h* can be adjusted by an eccentric g^1 to arrest the crank disc by the stop f^3. The retaining and releasing mechanism consists of a pawl *g* gearing into the ratchet teeth on the edge of the crank disc, and actuated by the pneumatic piston H^3 and slotted spring lever, which fits on the pin g^3 on one end of *g*. In a modification, there are several slides overlapping and moved simultaneously to different extents by suitably-inclined slots.

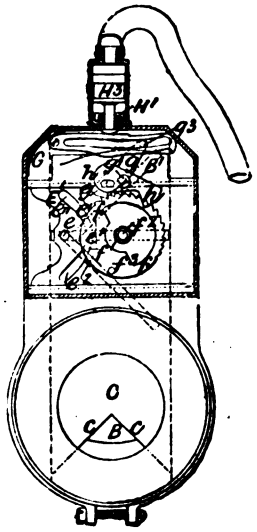

13,332. Decoudun, J. Oct. 1.

Photometers for photographic use. Varyingly-translucent plates are brought in front of the image on the ground-glass plate of the camera, and the image, which is at first simply blurred, gradually becomes a uniform dark tint; the intensity of the light is then estimated by the plate used. The Figure shows a method of carrying the invention into effect, which is simply given as an example. An opaque disc A has small holes *a*, *a*, *a* and larger holes *b* perforated in it radially. The disc is then covered by segments B of gradually-decreasing translucency. The disc A can be rotated close to the ground-glass plate by the thumb-piece C, only one line of perforations being visible at a time through slits in the back and front of the case D. When the light through the small holes is nearly obscured, while that in the larger is still visible, the intensity is read off by a reference number or letter on the disc showing through an aperture in the back of the case D.

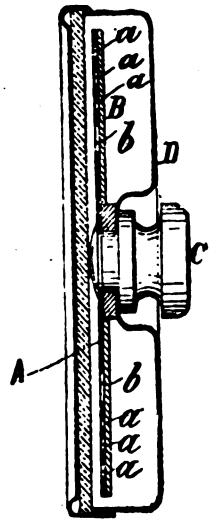

13,505. Jefferies, J. H. Oct. 5.

Racks for washing and drying plates. The apparatus consists of a rack, in which photographic plates are placed for insertion in the washing-trough and subsequent removal and drying. The

Digitized by Google

rack, Fig. 1, has corrugated sides *a*, *a*, into the grooves of which plates are slipped, being placed longitudinally or transversely, according to their size. The plates are supported at the bottom

FIG. 1.

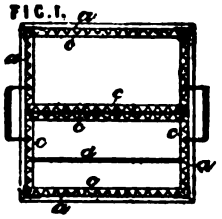

FIG. 4.

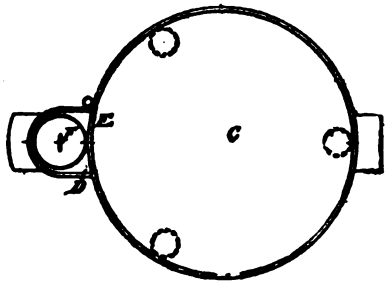

by a ledge *c*, or by wires *d*. The washing-trough, Fig. 4, has one large compartment C, in which the rack with the plates is inserted, and another smaller compartment D, separated from C by a perforated partition E, and containing a float F, which opens the outlet valve when the level of the water in the trough has risen to the required height.

13,725. Cadett, J. W. T. Oct. 10.

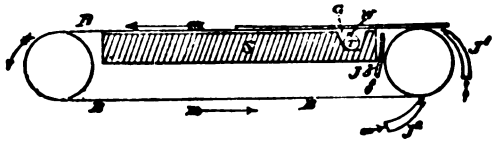

Sensitized plates.—Relates to appliances for cooling or setting the sensitive coatings of plates in coating-apparatus. In the Figure a perforated pipe W is introduced into a groove G in the slab S, over which the endless band B passes which carries the plates. Jets of water issue from these perforations and strike against the underside of the belt: water is also poured on the belt by the pipes J^1, J^2, J^3. The face of the slab may be grooved and water passed through the grooves.

13,844. Dallmeyer, T. R., and **Beauchamp, F.** Oct. 12.

Shutters, instantaneous. In a recess in the frame A, which is connected to the lens, two slides D, D are fitted so as to uncover and cover the aperture of the lens by opening and closing in the centre. The slides are actuated by levers E, E which turn on pivots F, F. These levers have slots E^1, E^1 which actuate pins D^1 on the slides and are geared together by toothed segments. One of the

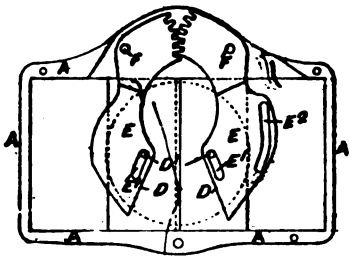

levers is actuated by a crank-pin working in a slot E^2, the crank being turned by a coiled spring. The crank is arrested by a stop when it has made one complete revolution; in one arrangement the stop is used also for releasing the shutter and is controlled from the back of the cameras. The duration of the exposure may be regulated by a hand-brake or a friction clamp on the axis of a controlling-lever, or by giving different amounts of tension to the actuating-spring.

13,879. Swinden, E. V., and **Harp, J.** Oct. 13. *Amended.*

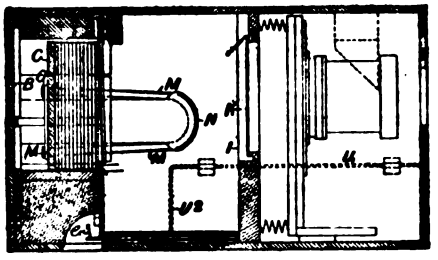

Cameras; change-boxes; shutters. — Consists mainly of a method of removing the plates, and stowing them after the pictures have been taken, and in the means for feeding up the plates. The unexposed plates are inserted through the hinged door B in the plate-box. They are fed up by elastic bands M, M, which are passed over the hooks N, on the sides of the camera O, and on the plate C behind the plates. The exposed plate at the front of the plate-box is removed by lifting it slightly, by pushing up the thumb-piece e^3, then allowing it to fall down by the reverse action. The bottom edge of the plate being now pushed forward, it drops on its edge into the repository chamber, and is caused to fall forward face downwards by

Digitized by Google

tilting the camera. The backs of the plates are covered with paper or other non-actinic substance. An intermediate partition I is fixed in the camera, having an opening in the centre which may be covered by a flap-shutter K. The rod U, U^2 is for holding the plates in the repository box when the camera is turned on its side. A flexible portion may connect the plate chamber and the repository chamber.

15,722. Sutton, H. Nov. 16.

Photo-mechanical printing.—Relates to the production of photographic printing-surfaces. A photographic image, "broken up" or grained by one of the ordinary methods, is taken upon a gelatine plate. It is immersed in water at a temperature below that at which the gelatine melts or dissolves, until all the gelatine swells. It is then taken out, and the free water removed by washing with alcohol, and is then subjected to a gradually-increasing temperature until the gelatine begins to melt, and this heat is continued until all, or nearly all, the water is driven off, when the portions of the gelatine unaffected by the light melt, and are drawn by capillary attraction under the unmelted portions, forcing the latter up in relief. An electrotype, stereotype, or other plate may be taken.

15,727. Farmer, E. H., and **Tompkins, H. K.** Nov. 16.

Sensitized plates and films; printing-paper; developing.—Albumen is used instead of gelatine as a medium to suspend the sensitive salts. The haloid salt may be dissolved in albumen, and the solution of the silver salt added; or the haloid and silver salts are dissolved in separate portions of water and added alternately to the albumen. For direct printing the silver must be in excess; for development the albumen must be in excess. The film is rendered insoluble by alcohol or chrome alum. A pyrogallic-acid solution is used for developing. Formulæ are given for the ingredients in the film and also for the developer.

15,907. Gibbons, G. B. A., and **McEwen, C. J.** Nov. 19.

Photometers for gas. A standard burner A is arranged in front of a brass plate C with slot C^1 for admitting rays to the chamber B, lined with black velvet. The light, after passing through a second slit in a brass plate F^1, with flanges to keep off reflected light, falls on sensitive paper wrapped around the clockwork-revolved drum D, and causes a photographic record of the height of the flame to be traced. A horizontal cross-wire, interrupting the light as it passes through the slit, causes a white band in the diagram which acts as a reference scale of candle power; several such cross-wires may be employed if desired. J is an ordinary governor. A record of the pressure is kept, preferably in the following manner:—The float H is

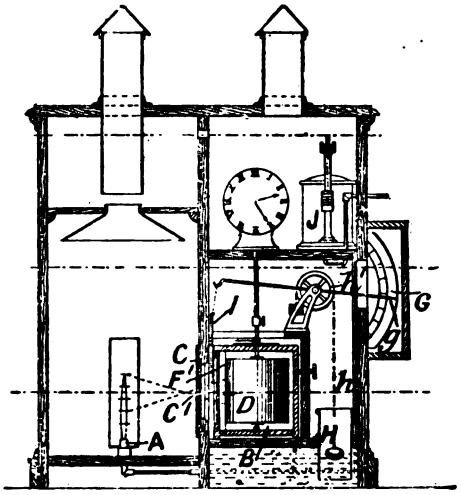

connected to a counterweight by a cord h passing over the pulley h^1, by which the pointer g is moved over a scale G. At the other end of the pointer a triangular wire I is suspended so that its horizontal base intercepts the light passing through the slit; a white "pressure" line is thus left simultaneously on the diagram.

16,003. Willis, W. Nov. 21.

Printing; developing.—Relates to an improvement on the invention described in Specification No. 1681, A.D. 1887, in which the platinum salts are contained in the developer, instead of being carried on the paper or other support. The object of the present invention is to obtain absolute uniformity of tone or colour. This is attained by ensuring the presence or contact of a salt of mercury or lead with the picture at the time of development. The use of phosphates or other salts for rendering the ferrous image insoluble is dispensed with. The paper is coated with ferric oxalate and a salt of mercury or lead or both, and developed with a solution containing a salt of platinum together with a salt of oxalic, citric, or tartaric acid. The salts of lead or mercury may be contained in the developer.

16,018. Thornton, J. E. Nov. 22.

Sensitized plates and films.—Relates to a substitute for glass as a support for photographic films and other purposes. The material used is algin, an extract from seaweed. The algin is dissolved

Digitized by Google

and, according to one method, flowed over a level surface, dried, and rendered insoluble by chloride

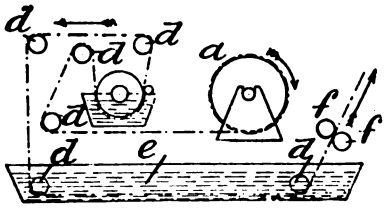

of calcium. A coating of pure gelatine may be applied to one or both sides of the film, before coating with the sensitive film. By another method the sensitive material is incorporated with the algin, and also any colouring-matters that may be necessary. A paper backing from which the film may be stripped off may be employed. The Figure shows part of a machine for coating the paper. The paper passes from the stock spool *a*, over guide-rollers *d*, *d*, through the trough *e* containing the material for rendering the algin insoluble, and then through the squeezing-rollers *f*, *f* to another machine for coating with the sensitive gelatine. The film then passes on to the drying-rollers, and finally on to the looping-frame, the rollers of which are made to grip the edge of the film. The film may be stripped from the paper by winding them on two separate rollers.

16,136. Ball, E. J. Nov. 23.

Automatic coin-freed apparatus.—The apparatus is adapted for taking, developing, and delivering a photograph on the insertion of a coin and the actuation of certain knobs and levers. The required automatic movements of the parts are obtained by weights fixed to cords passing round pulleys on various shafts, the weights being wound up again by the final movement in obtaining the photograph. The Figure is a plan with some parts of the apparatus omitted for clearness.

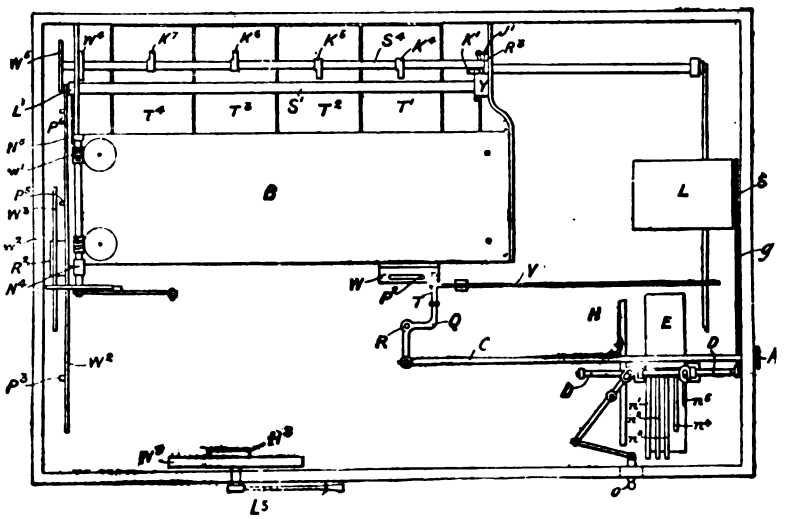

The person to be photographed is placed against an external rest which brings him into focus in the lens L. E is the exposure wheel having a series of part collars n^1, n^2, n^3 of different lengths thereon; the sliding shaft D, to which is attached the arm *g* carrying the lens shutter S, can be set by moving the external knob *o* so as to bring a depending arm over any required collar according to the state of the light. When the wheel E revolves the arm is pushed aside as the collar passes beneath it, and the shaft D partly revolved, moving the shutter S from in front of the lens. The exposure wheel E is locked by two catches. The inserted coins depress the lever V, the other end of which adjusts the hinged end T of the lever Q, so that it can pass into the guide W. On now pulling out the knob A on the rod C the lever Q turns on its pivot R, and the end T pushes the stud P^2 along a slot in W. The stud P^2 is connected with one of the catches of the exposure wheel, which is thus released, and also with a sliding bottom of the box B containing the prepared plates, one of which plates is caused to fall into the carrier; the rod C is also arranged to agitate the developing-solutions in the troughs T^1 to T^4. The carrier for the prepared plate consists of a narrow skeleton box, in which the plate is held vertically supported by a catch; the box is attached by an arm to a block Y, which can be traversed along the square shaft S^1 by a falling weight. After inserting the coins the operator presses an external knob and sets free the second catch of the exposure wheel E; this immediately begins to revolve under the influence of a falling weight, the cord of which passes round the pulley H, and so removes the shutter from the lens. At the completion of this stage a bell is rung by the returning shutter. An eccentric on the shaft of the exposure wheel next frees a catch K^1 of the block Y, allowing the block to start along the shaft S^1, and also a catch which normally prevents the rotation of the

Digitized by Google

wheel W^2 by a falling weight fixed to a cord passing round the wheel W^3. In the subsequent movement of the block Y it is checked at intervals by the stops K^4 to K^7 fixed upon the counter-shaft S^4. These stops are so placed as to arrest the block Y in certain positions of the shaft S^4, but release it and bring the next stop into action on a part rotation of the said shaft. The rotation is produced by pins P^3, P^5, P^6 on the wheel W^2 gearing with the star-wheel W^5, and a weight, the cord of which is fixed to the pulley W^4, is partially wound up at each part revolution, back motion being prevented by a pawl J^1 gearing with a ratchet R^3. The front side of the wheel W^2 carries cam-blocks (not shown) which, while the block Y is held by a stop, act upon the lever L^1 and cause the shaft S^1 to partially rotate so as to dip the plate carrier into a developing-solution. When the carrier has reached the end of its travel it causes a bell to sound, and the plate-supporting catch is brought into position close to a tipping-lever, which is operated by the subsequent movement of the lever L^5. It is now necessary for the operator to rotate the lever L^5, whereupon the completed photograph is discharged; the pulley W^9, round which the weight cords and the carrier cord are led, is rotated simultaneously, winding up the cords and returning the carrier and block Y to their initial position, while the eccentric H^3 operates mechanism by which the plates are advanced one step in the plate box, and a fresh plate brought over the sliding bottom ready for the next delivery. The block Y, just before attaining its normal position, releases the pawl J^1, and the weight connected with the pulley W^4 then runs down and restores the shaft S^1 to its initial position.

16,648. Delves-Broughton, V. W. Dec. 3.

Cameras.—The object is to enable the camera front to be elevated or depressed independently of the camera support, so as to incline the optical axis in the vertical plane while maintaining constant the point of intersection of said axis with the sensitive plate. The front D of the camera is connected to the back K, by a pair of radius bars A, which act as a substitute for a baseboard. The back is pivoted to the radius bar at E, and may be clamped at any angle to it by the screw F and slotted plate H, thereby allowing vertical swing. The focussing is effected by the pinion I, which gears in a rack on the edge of the radius bar. Each radius bar is pivoted to the stand on a horizontal axis at B, to which it may be clamped at any angle by the screw C. The front is fixed to the radius bar by the clamping-screw *d*.

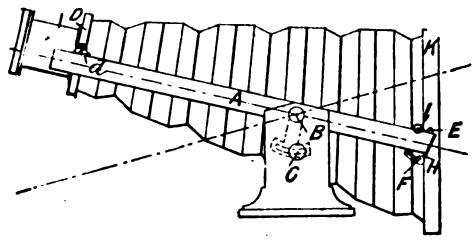

17,693. Berkeley, H. B. Dec. 23.

Fixing; clearing. — Relates to a solution for fixing and clearing photographs after they have been developed by pyrogallol or similar developer. By this solution the brown stain imparted by the developer is removed, and a grey or neutral tint imparted to the positive or negative. The composition consists essentially of a soluble bisulphite or acid sulphite of the alkalies, or alkaline earths, or magnesium, or aluminium, and a soluble thiosulphate with a similar chemical base. The substance in the solution may be produced by any of the ordinary chemical processes.

17,893. Backus, Q. S. Dec. 29.

Dark-rooms. — Relates to a portable vapour bath, applicable also as a photographic dark-room, and for other purposes. Fig. 1 shows the frame extended without the canvas covering. Fig. 4 shows the bath in use. A pan A is made with, say, three internal lugs B, to each of which a tube C is pivoted. Inside this tube a second tube D telescopes, and is connected to an upper tube F by a flexible rubber rod E. The upper and lower parts are kept rigid by a sleeve tube C, which is slid and fixed over the rubber E. To the top end of the

FIG. 1.

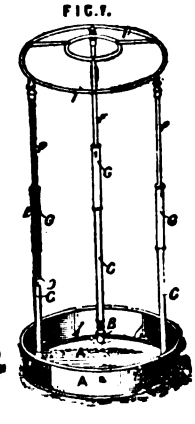

FIG. 4.

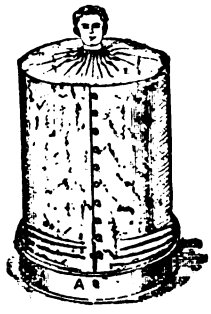

Digitized by Google

supports, a ring I is pivoted. When the bath is not required the sleeves G are slid above the joints and the supports are folded inwards and laid in the bottom of the pan A, together with the ring I and the canvas covering shown in Fig. 4. The apparatus when extended may be used as a photographer's dark-room, a tent, or a wardrobe &c., and when folded up may be used as a trunk.

A.D. 1888.

171. Wild-Wirth, H., and **Wild, P. F.** Jan. 4.

Photo-mechanical printing.—Relates to the production of chromo-lithographic and other printing-surfaces. The stones or plates to form the printing-surfaces are first provided with a sensitive coating of asphaltum, and are then exposed successively under the same negative for different lengths of time, according to the colour they are to print. They are then developed and, when necessary, parts not required to print or not having details shown up are washed with a strong solvent (turpentine or benzol), until they are washed away or the detail shows up; the other parts of the plate are protected by gum or other protective coating.

356. Hart, F. W., and **Bishop, W.** Jan. 9.

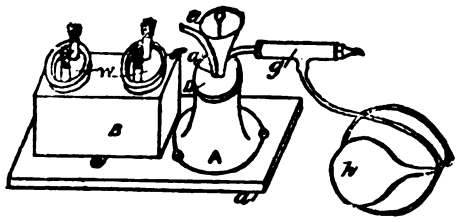

Lamps, actinic. The object is to construct a lamp for burning flashing powders. The powder is dropped through a funnel *e* into a receiver which is contained inside the air reservoir A. When air is forced into A by means of a pump consisting of a flexible ball *h* and a valve chamber *g*, the powder is forced up through the pipe *a* and discharged between two pairs of flames *w* of a gas lamp or spirit lamp B. A chamber plug may be used for dropping the measured quantity of powder into the receiver, or an ordinary lifting conical plug. The reservoir may communicate with a distributer having a number of outlets fitted with flexible tubes proceeding to various lamps.

405. Perry, E. W. Jan. 10. *Drawings to Specification.*

Sensitized films.—The film is spread upon a flexible plate or ribbon, made of celluloid, xylonite, or other pyroxilin camphor compound. When a ribbon is used it may be stretched in the camera between two rollers.

423. Le Prince, L. A. A. Jan. 10.

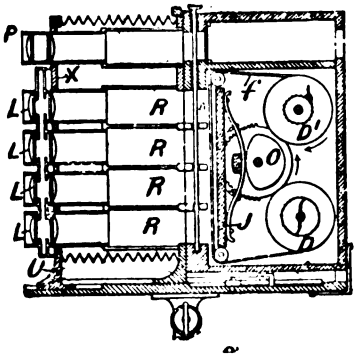

Producing transparencies; cameras.—The invention includes a camera, as shown, for taking photographs of successive positions of moving bodies, and a similarly-constructed zoetrope or apparatus for throwing the successive pictures on a screen as in the magic-lantern. In the camera, a

Digitized by Google

number of similar lenses L, L, say 16, throw their images on two strips *f* of sensitized paper carried on the rollers D, D¹ of two roller slides, which are fed alternately by the mechanism of the camera. Before exposure each film is clamped by a panel J forced up by a cam O. Extension tubes R, R are fixed on the lens tubes to exclude side lights. The instantaneous shutters consist of two rotary sectors which are moved forward by segmental wheels and brought back in rapid succession by springs; the shutters are connected by a suitable train of gear so that the exposures are made for each lens in the proper succession. A stand attachment is fixed to the camera with joints to allow the camera to be directed in any required direction. Focussing-lenses P are fixed on the top of the camera.

---

524. Farmer, E. H. Jan. 12.

Photo-mechanical printing.—A silver emulsion film is developed, after exposure, in such a way as to produce degrees of adhesiveness or absorptiveness in proportion to the different intensities of the light, and will then give prints in aqueous or greasy pigments. The silver emulsion is preferably specially prepared, as follows:—6 grammes of gelatine are softened in water and then dissolved in 2000 grammes of water at 150° F.; 100 grammes of silver nitrate are dissolved in 2000 grammes of water; and 80 grammes of potassium bromide are dissolved in 2000 grammes of water. The gelatine solution is heated to 150° F., and the other solutions, at the same temperature, added in alternate small quantities. The emulsion is then put into a vessel placed in a water bath at 212° F., and constantly stirred for some time. 1000 grammes of bromine water are then added to the mixture, and the sensitive silver haloid and some gelatine will sink to the bottom of the pan. This is washed and heated to 212° F. for a few minutes until it has melted. The subsequent operations are performed in the dark room. More gelatine, some gum arabic, and glycerine are added to the emulsion, which is then filtered and spread upon sheets of talced glass. As soon as the emulsion has set on the glass sheets of damped paper are placed upon it, and when dry the emulsion should leave the glass and adhere firmly to the paper. After exposure, the paper is floated with the paper downwards, upon a pyrogallol developer containing alcohol. A good developer is,—pyrogallol 1 gramme, ammonia 1 c.c., potassium bromide ·5 gramme, water 180 c.c., alcohol 20 c.c. As soon as the parts representing the shadows are seen to soften and glisten, the film is removed from the developer. Instead of floating the surface of the film may be protected by a waxing solution, and immersed in the developer. The film is now dusted with finely-powdered glass or flint, which sinks into it according to the intensities of the light. The film is then laid upon a polished copper or zinc plate previously coated with gum, dried, and the powdered glass brushed off, when it is ready for printing. In printing, the plate is rubbed over with sweet oil and turpentine, then dabbed with ink and the surface cleaned with the palm of the hand. If desired, the metal plate may be coated with the emulsion, which is exposed and developed upon it. Instead of graining with powder, this may be done by pressing a roughened plate upon the film. An etched plate may be prepared by covering it with a graining film and then coating with emulsion and drying. It is then dipped into soluble gum with a little silver bromide and dried. The plate is then developed by immersion in the pyrogallol developer, and then etched with the ordinary (ferric chloride) etching-solution. The treatment with soluble gum and bromide may be applied in other processes where the emulsion is put directly upon the plate.

---

907. Barr, P., and **Watson, T. P.** Jan. 20.

Tripod and like stands for cameras. Each leg is in two, three, or more parts A, B, C, tongued and grooved so as to slide one on the other. The upper sections consist of pairs of bars *a*, *a*, *b*, *b* connected by cross-pieces *a*¹, *b*¹ which also form stops; the lowest section C is solid and has a stop plate C¹. The middle and lowest sections have racks D, D¹ with which engage pawls E, E¹. The pawl E is disengaged by operating the push-piece *e*², but the pawl E¹ is automatically disengaged on closing up the stand by striking against the curved part *a*³.

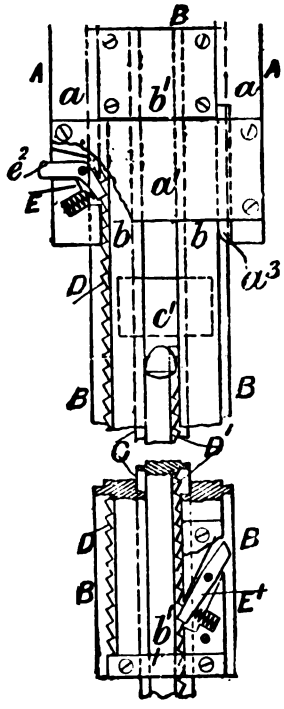

1026. Thompson, W. P., [*Schirm, J. W. C. C.*]. Jan. 23.

Ornamenting by photography; copying drawings &c.—Relates to the reproduction of drawings, pictures, &c. The process is suitable for imitating Limoges enamel, or any other process in which a light picture is produced on a dark background. A powder of a light opaque colour is mixed in suitable proportions with a solution of sensitive bichromatized gelatine or other suitable substance. The coating is exposed under a positive, transferred from its temporary support to the dark surface, and developed with warm water.

Digitized by Google

1201. Boult, A. J., [*Backelandt, L.*]. Jan. 26.

Developing; sensitized plates.—The back of the sensitive plate is coated with the developing-substance mixed with a preservative such as salicylic acid, also with gum arabic, dextrin, gelatine, collodion, or other varnish-like substances, and with alcohol and water. The plate can be then developed in water to which a little ammonia has been added, or one half of the back of the plate can be coated with an ammonia-producing substance such as a mixture of sugar, slaked lime, and gum arabic.

1291. Stanbury, C. H. Jan. 27.

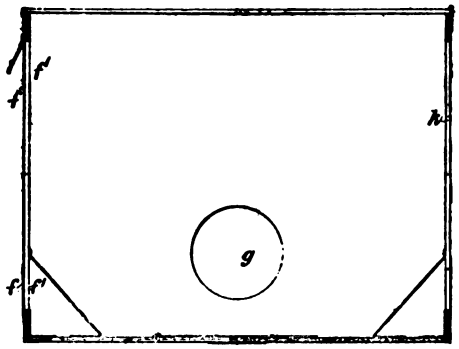

Dark-rooms, portable. One of the sides of a portable dark chamber is provided with an opening at *k*, having flexible sleeve and straps, for the eyes of the operator, the nose and mouth being left outside for breathing. An opening for the introduction of the plates is provided at the opposite side; this opening is covered by a curtain sliding between the two thicknesses *f*, *f*^{1} of the fabric forming the wall. A sink made of india-rubber and covered by a perforated metal plate is placed in the bottom of the chamber. The plates are manipulated by the hands, which pass through sleeves attached to openings *g*. The chamber can be folded into a flat package, and may be fixed on a tripod.

1466. Haddan, R., [*Cantó, J.*]. Jan. 31.

Automatic coin-freed apparatus.—By dropping a coin into the apparatus an exposure is made, and the plate is developed, fixed, dried, and turned out finished. Photographic plates are placed one behind the other in the case *d*, and are continually being pushed forward by cords held in tension by the weights W. When a coin is dropped down the spout *i* it falls on the end of a lever, the other end of which then liberates a stop on the endless band *s* and allows the band to move, thereby causing a movement of the pulley *p*. On this pulley is a tooth *v* which lifts the shutter at *c*, makes the exposure from the lens *b*, and again allows the shutter to drop. The plate exposed now falls down the incline *r*, face upwards, on to the endless band *s*. The plate by the movement of the belt is then carried successively under the developing-solution

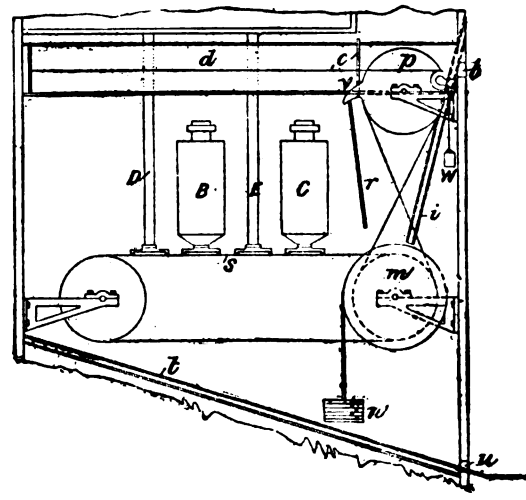

reservoir C, the washing-pipe E, the fixing-reservoir B, the washing-pipe D, the stop on the belt opening the tap of each as it passes and finally dropped on the inclined hot plates *t*, *t* where it is dried in its passage to the receptacle *u* outside. The mechanism is actuated by a weight *n* through a drum *m* about which the cord is wound.

1510. Krügener, R. Feb. 1.

Cameras; change-boxes.—The camera is of the detective class. It is externally of book form, and is divided internally so as to form a change-box and camera combined. The unexposed plates are stored in the compartment A, whence they are pushed by the slide E, having a ledge D, into the middle compartment B, opposite the lens L, where exposure is made by the instantaneous drop shutter M. The plates after exposure are dropped into the third compartment C. The store and receiving compartments are fitted with spiral springs to press the plates forward.

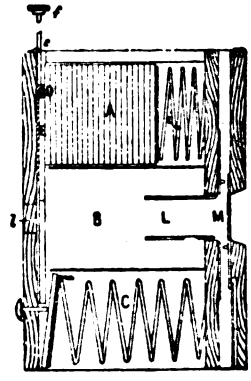

Digitized by Google

1583. Dallmeyer, T. R. Feb. 2.

Lenses.—The lens is compound and is made up of three meniscus lenses A, B, and C. The outer lens A is of flint glass, and the other two of crown glass. A and B may be cemented together, while an air space is left between B and C as shown. The diaphragm is placed in front of the outer flint lens.

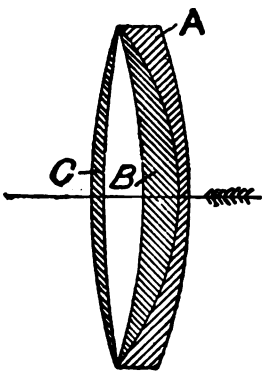

1985. Whitfield, G. C. Feb. 9.

Photo-mechanical printing.—The object is to produce prints by the "Woodbury-type" process with a broad clean margin, suitable for binding into books. The gelatine relief may be masked round the margin, during exposure, to sharply limit the outline of the area of the picture; or the finished relief may be trimmed to the exact size of the picture. The lead plate to form the matrix is of the full size of the picture with its margin, and when impressed with the gelatine relief, the margin is left plain and in relief. Any ink which squeezes out on to the margin, when printing, is removed by a cloth moistened with hot water.

2382. Phipps, E. Feb. 17.

Cameras; shutters.—Relates to cameras of the class in which a mirror A inside the camera is used to throw the image upon a horizontal focussing-screen B. The mirror, which is pivoted so that it can be swung upwards into a horizontal position, carries with it a flexible or sliding shutter C with an aperture which makes the exposure as it passes over the lens. The mirror may be moved by hand or spring, and its speed may be regulated by pressing on a spindle attached to the mirror and passing through the side of the camera. The shape of the aperture in the shutter may be altered by an adjustable plate working on the face of the diaphragm.

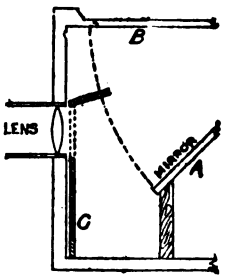

2730. James, A. Feb. 23.

Lamps, actinic. Relates to magnesium lamps for photographic purposes. The magnesium powder is placed in a funnel-shaped reservoir O, and blown through curved pipes a, a^1 into the centre of argand or similar burners b^1, b^2, by means of an air pipe c. In the apparatus shown, three burners are supported on a pedestal B, to the bottom of which the gas pipe f is connected. A reflector R is fixed on rods r attached to the gas-supply pipes.

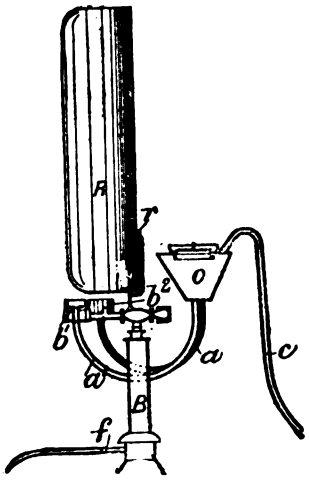

3076. Gale, C. H. Feb. 29.

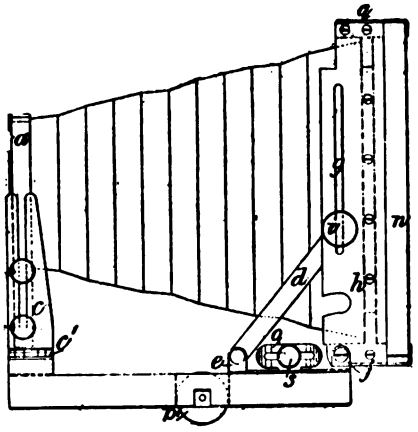

Cameras.—The front a is vertically adjustable on slotted supports c, which are hinged at c^1 and fold down transversely on the baseboard for packing. The tail-board slides in rabbeted grooves in the baseboard, and is actuated by two racks and a long pinion which slides longitudinally, so that the milled head p^1 can be pushed into a recess when packed. The back q is mounted for vertical swing by hanging it to ears j, and is fixed by struts d hinged to ears e fixed to clear the bellows, and having clamping-screws i sliding in slots g of plates h attached to the back; for horizontal swing the plate to which the ears e and j are attached is pivoted at the centre of the tail-board, and is clamped by means of a screw s to a fixed curved sector o. The reversing-back n projects beyond the sides h to protect the clamping-screws when packed.

Digitized by Google

3196. Ramsden, J. W. March 2.

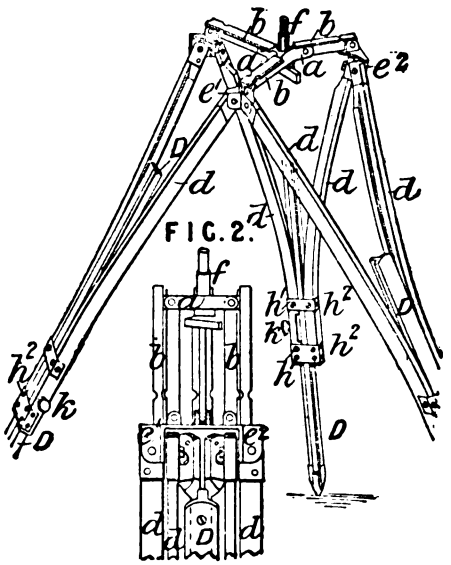

Tripod and like stands for photographic, surveying, and other purposes. The head consists of a centre piece *a*, to which are jointed three arms *b*. To each arm is hinged an angle bracket e^1, e^2, and to these are jointed the split upper ends *d*, of the legs as shown. When folded, the arms *b* hang vertically as in Fig. 2. The lower parts D of the legs are T-shaped and work in similarly-shaped spaces between the L-shaped upper parts, which are connected by plates and U clasps h^1, h^2. Sufficient friction is given to hold the parts in any position by springs adjusted by set-screws *k*. The camera &c. is fixed by the screw *f*. The stand may be folded or extended without fastening or loosening parts.

3259. Place, J. March 3.

Shutters. — Relates to a double shutter for stereoscopic cameras. The two slides *e*, *e*, Fig. 3, are connected by a cord *d*, *d* passing round

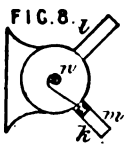

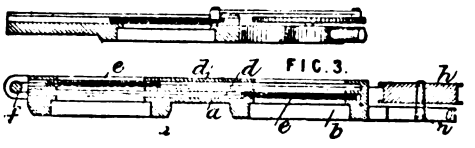

the roller *f*. The ends of the cord are wound round the pulley *h* in opposite directions and fixed to it, so that, when the pulley revolves, one cord is wound on and the other is unwound. The frame *a* of the shutter has two apertures *b*, which are covered when the shutter is set by the slides *e*; on rotation being imparted to the pulley *h*, each of the slides *e* slides across to cover the other aperture, leaving both apertures open while in the middle position. The roller *h* is turned by a pneumatic arrangement. A piston *m*, Fig. 8, slides in a cylinder *k*, and is attached to the axis *n* of the roller *h* by a cord as shown. Air pressure is applied to the inner side of the piston by the tube *l*.

3352. Passingham, E. J. March 5.

Re-touching, desks for. This apparatus when unfolded is used to support negatives for examining and re-touching, and, when folded up, as a desk for examining and rectifying positives. A board D is hinged to a baseboard A, and supported by hinged struts B; a mirror F is hinged to D and similarly supported by the hinged struts G. The board H on which the negative is supported is similarly hinged to D and supported by the struts J. To the top of H is hinged the board M which serves to shade the negative from above. The negative is shaded at the sides by the opaque flexible pieces P, and a focussing-cloth is thrown over the head of the operator to complete the exclusion of the light. The negative is fixed by a clamp on a piece of semi-transparent glass. When the apparatus is folded up the flexible sides P are folded between H and M.

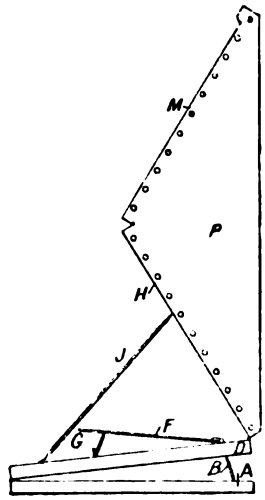

3615. Salomons, Sir D. L. March 8.

FIG. 1.

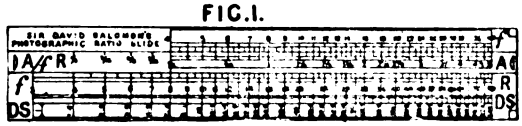

Exposures, determining.—Relates to a slide-rule specially graduated to calculate the rapidity of photographic lenses. The scale *f* is a logarithmic

Digitized by Google

scale of focal lengths, the scale on the slide A is a logarithmic scale of the apertures of the lens or stops, and the scale R is a logarithmic scale of numbers which denote the ratios between the focal length and the apertures. The figures corresponding to the different ratios on the Dallmeyer standard are marked on the scale D.S., and those corresponding to the Photographic Society's standard are marked in the bottom of the groove in which the slide A works. The ratio of any given aperture to any given focal length is determined by setting the slide as in the usual manner of operating the slide-rule. A scale is drawn on the edge of the rule for measuring the diameter of stops.

3779. Berry, J. L. March 12.

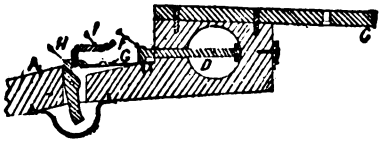

Camera stands or supports for instantaneous cameras. The camera is fixed on a board C supported on the end of a gun stock A. The pneumatic ball for releasing the shutter is placed in a recess D, where it is squeezed by the spring bolt F, when released by the trigger H and spring G. A safety hook I is screwed into the top of the trigger, which can be pulled only when the hook has been turned back.

3782. Taylor, F. March 12.

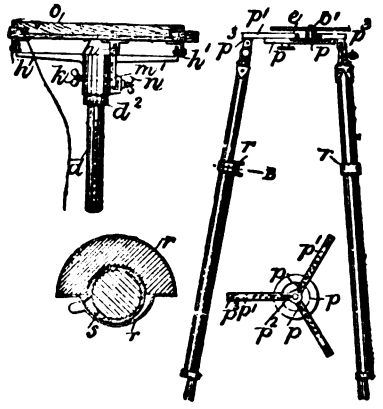

Tripod and like stands.—Relates to metallic stands for cameras &c., consisting of a tripod base, on castors, in which slides a stem *d* having ratchet teeth and a spring catch, or rack teeth and a pinion for adjustment. The table is pivoted by lugs h^1 to a bracket having a socket fixed by a screw *k* or revolving on the shoulder d^2 of the stem *d*. An angular adjustment is obtained by quadrants pivoted at *h* and clamped by the screw *n* in the socket m^1. The table may have a sliding part *o* and a clamp for fixing the camera. In another form, the table *e* rotates on a pin o^1 or in grooves in the tripod head *p* which has three arms p^1, hinged or sliding in grooves p^2. Lugs p^3 on the arms p^1, or the arms themselves, are pivoted between plates on the upper part of the three legs. The lower part of each leg lies in a hollow in the upper part, and is connected to it by bands *r*, *r*. On rotating the lower part the cam *s* causes the two parts to be firmly locked. The legs are provided with reversible tips for indoor or outdoor use.

4145. Rouch, S. W. March 17.

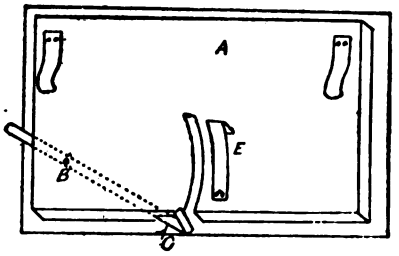

Cameras; change-boxes.—Relates to improvements on the invention described in Specification No. 6613, A.D. 1887. In the present invention, applicable to detective and other cameras, the plates are transferred from rear to front of the change-box. A represents the back cover of the reservoir. The posterior plate is raised by the lever B, on the end of which is a projection C which supports the plate. When the plate is raised it is held by the spring catch E, whence it can be transferred by the flexible bag to the front as described in the Specification aforesaid. The lever is returned to its normal position by means of a spring. Receiving-chambers are made distinct from the camera, and can be inserted with a fresh store of plates.

4149. Taylor, J., [*Brice, W.*, acting for *Brice, W. A.*]. March 17.

Cameras; change-boxes. — The body of the camera consists of a box having two compartments A and B separated by two thin partitions C. The plates are stored in the compartment A before and after exposure, but are transferred to the chamber B for exposure. To transfer a plate for exposure the partitions C are pushed back by knobs on

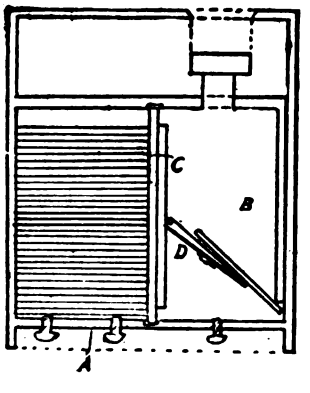

Digitized by Google

the outside of the camera, till a sufficient space is left for the front plate to drop down into B. The plate is there received by a hinged flap D, by the movement of which, combined with a suitable rotation of the camera, the plate is transferred to the back of the camera and held in a position for exposure by the end of the flap D abutting against it. After exposure, the plate is returned to the store compartment by sliding forward the partitions C and tilting the camera. The camera is fitted with a finder and a shutter adapted for long or short exposures.

4248. Nowlan, F. March 20.

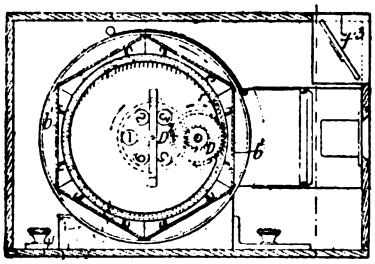

Cameras; change-boxes.—The camera belongs to the instantaneous or detective class. The plate-changing apparatus is fixed at the back of the camera and consists of a drum on the circumference of which the plates b^1 are fixed. The drum is turned round from the outside to bring the plates successively into the position for exposure by a knob connected to the toothed wheel D which gears into the internally-toothed wheel I fixed on the drum. Another pinion on the axis of D actuates a wheel D^2 which indicates by figures the plates exposed. On the top of the camera at the front is fixed a finder consisting of a reflector set at an angle of 45°, in combination with which are two sets of intersecting cross-wires and a plummet f^3 to enable the camera to be directed to the object and held vertical. For focussing, the drum is removed and a focussing-glass substituted.

4537. Bonnaud, J. B. G. March 24.

Colouring; sensitized films.—Positive and negative proofs of the picture to be coloured are taken. From the transparent positive a photographic impression is taken on a sensitive film made from a solution of glucose, gum, bichromate of potash, and ammonia, by filtering and spreading on a sheet of well-cleaned glass. Vegetable colours are then dusted on the film by a large-sized brush made of soft fine hair. The film is again heated and exposed under the negative proof. The picture obtained by the first dusting protects the shades, and the reverse of the shades is obtained by the second exposure. After the exposures a mixture of boiled linseed oil and varnish is poured on, and the details painted in by hand. The picture is then removed from the glass by collodion and transferred to wood, canvas, &c. Pictures can be obtained by the use of a positive proof only. To imitate an oil painting, the ground on which the picture is to be placed is first painted white. To imitate water colours, after the two exposures and dustings, the linseed oil, varnish, and oil colours are dispensed with, and the film transferred directly to the canvas or other support.

4692. Reed, A. H., [*Riedel, E. H.*] March 27.

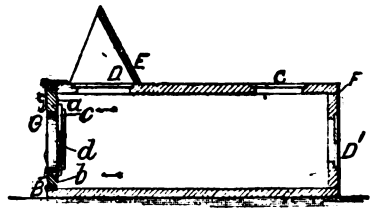

Dark-rooms, portable. The chamber consists of a rectangular box, in the top of which are two panes, one D of orange glass for inspecting the negative while being developed, and the other C of red glass for admitting light. Another pane D^1 of red-coloured glass may be inserted in the end F. E is a hood over the glass pane D. An exposed plate in a dark slide is inserted by opening the hinged end B. The different operations of development &c. are performed by the hands, which are inserted through the two openings G. These openings are each covered by four flaps *a*, *b*, *c*, *d* held down by elastic cords, so that they press closely against the arms and exclude the light.

4823. Phillips, S., and **Stephan, A.** March 29.

Photo-mechanical printing.—A transfer is prepared in the following manner:—A sheet of preferably thick photographic paper is coated with gelatine by drawing over a bath of about 1 oz. of gelatine in 7 oz. of water, to which may be added 2 grains of chrome alum and half a grain of tannin. This is dried and rolled, and is then treated in the dark with a solution of about 3 oz. of potassium bichromate in 80 oz. of water and dried. It is then coated (in the dark) with material, such as a thick litho ink, which will form a granular coating and protect minute portions of the surface from light. The ink preferred is made by mixing 4 oz. of beeswax, 1 oz. of spermaceti, ½ oz. of tallow, and 1 oz. of lampblack, with about half the quantity of good litho ink. It is then exposed behind the negative, and rolled up with thin litho ink. After washing and soaking it is developed by rubbing gently with a soft sponge. The transfer is made to a lithographic stone or plate by damping from the back and rolling or pressing, or it may be transferred to metallic or other plates for etching or engraving

Digitized by Google

or to pottery, china, &c. for ornamental purposes. For colour work any number of the transfers may be made, parts being stopped or cut out for the different colours.

4874. Williams, E. S. March 31.

Sensitized films.—The sensitized film is made so stiff and insoluble that a support is unnecessary. The emulsion is made with a rather large proportion of gelatine and a certain amount of chromium salts. After the films have set they are immersed in a bath of sulphurous acid, and then thoroughly washed.

5055. Hart, A. April 5.

Embossing photographs; printing; sensitized plates and films.—A sensitive emulsion is coated on to the following substances:—celluloid, vulcanite, india-rubber, and a substance known as "everclean." These materials may receive any required tint of colour before being coated. After the photograph has been printed on the plate, perforations are cut out on plates of shape corresponding to the parts of the picture requiring to be embossed. These perforated plates are pressed down by hydraulic pressure on the print, which is laid on a sheet of india-rubber in a metal trough. The required parts are thus embossed, and the depressions may be filled up by cement. Sensitive plates formed by coating the above-named materials with sensitive emulsion may be used for contact printing.

5140. Hines, J., Howell, E., and **Howell, A.** April 6 *Drawings to Specification.*

Automatic coin-freed apparatus.—The apparatus, after being started by the weight of coins, performs automatically all the operations of preparing a sensitive plate, exposing, developing, fixing, varnishing, and delivering a photograph. The mechanism is contained within a dark box on one side of which the lens is mounted. To start the apparatus, coins are dropped through a slit and a handle moved. A card or plate will then be picked up from a store drum by a clip on the end of a radius arm which turns on a vertical axis. The arm carries the plate over a collodion and silver bath in succession, dipping the plate with a vibratory movement in each. The plate is then carried in front of the lens and exposed; the end of this stage of the operation being indicated by the cessation of an electric bell which started ringing when the coins were dropped in. The plate is now dipped in succession with vibratory movement into the following series of baths or chambers, arranged in a circle under the end of the radius arm, viz.:—developing, washing, drying, varnishing, and drying baths or chambers, and, finally, into a cutting-apparatus by which it is separated and delivered outside the apparatus. The baths are replenished and the gas flame for the drying-chambers regulated by automatic mechanism. The mechanism is actuated by spring, weight, or hydraulic power. Modifications of the apparatus are described; for example, the table with the chambers may move and the arm with plate be fixed.

5194. Schröder, H. L. H., and **Stuart, J.** April 7.

Lenses. — Consists in combining a plano-convex lens *a* of high refractive but low dispersive power, and a plano-concave lens *b* of lower refractive but the same or higher dispersive power. The two lenses are cemented together at the surface *c*, which may be very slightly curved, if desired. By this construction an achromatic lens producing a real image may be obtained with the surfaces *e*, *d* concentric or very nearly so and having a large flat field. Such lenses may be employed singly or in combination.

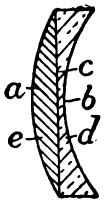

5462. Henderson, A. M. April 12.

FIG. 10.

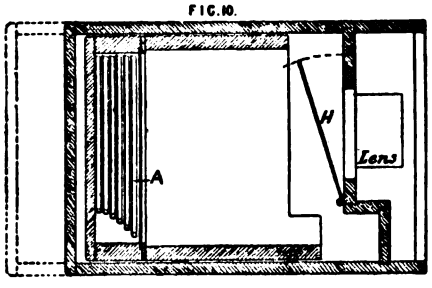

Cameras; change-boxes; dark slides. — The plates in the change-box or dark slide are fitted in sheaths A, Fig. 10, which are hinged at their lower edges so that they can be folded down in the bottom of the camera after exposure. A flap H is folded down on the top of the exposed plates to exclude the light. The change-box may be fitted on ordinary or detective cameras. The lens may be mounted on a front T, Fig. 11, which by means of links R, R, or otherwise, is caused to move parallel to the plane of the hinges of the sheaths of the plates, for focussing. The front is fixed in any particular position by means of a link S and stud U. In the detective cameras the focussing may be done by means of scales on the sliding parts of the camera; admission to the change-box is obtained by a door opening on one

Digitized by Google

side. Several different forms of detent may be used for holding the plates in the vertical position.

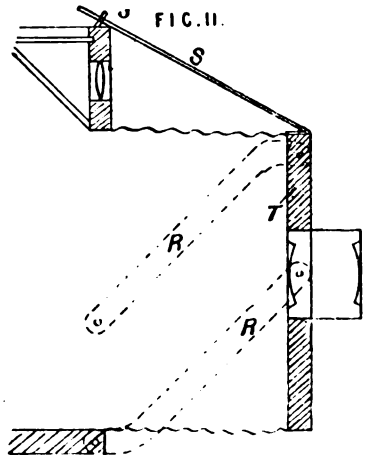

5536. Holliday, S. J. April 14.

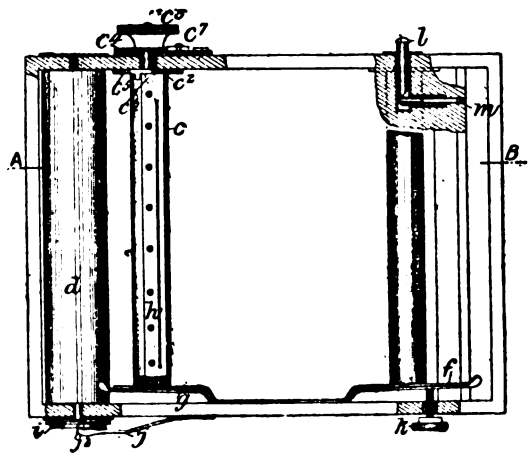

Roller slides. — The film is attached to the receiving-roller *c* by a strip of metal *h* slit longitudinally. It is drawn round a measuring-roller *d*, to the end of the axle of which a disc *i* is fixed, having in it a spiral groove, in which a projection j^2 on the end of the spring *j* slides till it finally drops into a hole in the plate and locks the measuring-roller. Tension is imparted to the film by the pressure of the springs *f* and *g* on the ends of the rollers. The tension on the spring *f* may be varied by means of the set-screw *k*. The length of each sheet is marked by a pricker *m*, which is forced out by pressing down the knob *l*. For filling, the rollers can be taken out by pressing back the springs at one end. The receiving-roller has a ratchet arrangement combined with an undetachable fitting as shown at c^3, c^7.

5545. Hurter, F., and **Driffield, V. C.** April 14. *Drawings to Specification.*

Exposures, determining.—This instrument consists of a slide-rule, two scales of which are fixed and the other two movable. The fixed scales are subdivided with divisions corresponding to the logarithms of numbers which indicate according to suitable units, the one the intensity of light for the given latitude, time of the year, and time of the day, and the other the "inertia" or inverse of the sensitiveness of the given plate. The movable scales are subdivided with divisions corresponding to logarithms of numbers which indicate according to suitable units, one the speed of the lens, and the other the length of the exposure. The length of exposure will thus be equal to the intensity of the light multiplied by the speed of the lens and divided by the "inertia" of the plate. This can be shown by the ordinary manipulations of the slide-rule.

5619. Dallmeyer, T. R., and **Beauchamp, F.** April 16.

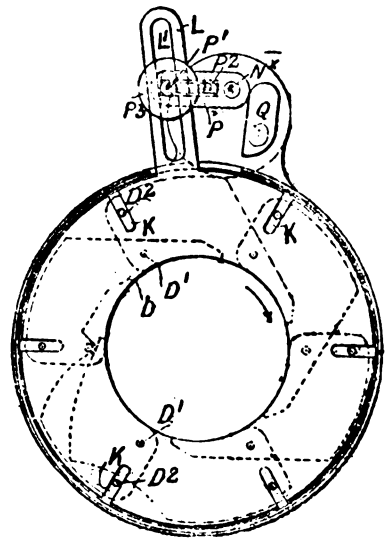

Shutters.—The shutter is of the iris diaphragm type, and consists generally of a number of leaves moved simultaneously to and from the centre of the lens tube. The shutter can be set to open to any required extent, thus dispensing with the use of a diaphragm. By means of a brake or other regulating-mechanism the shutter may be used for long or instantaneous exposures. The leaves of the shutter consists of chopper-shaped pieces D pivoted at D^1 and caused to oscillate to and from the centre of the lens by the action of a slot K on a stud D^2. The slots K are cut in a ring to which the lever L is fixed. To regulate the opening of the shutter, the stroke of a variable crank is employed. The crank P is turned by suitable clock work on the crank shaft N× and is fitted with a

Digitized by Google

crank-pin P^1, which may be clamped at any point in the slot P^2 by the nut P^3. The crank-pin works in the slot L^1 of the lever L; when the lever L is in contact with the stop Q the shutter is closed and the extent to which it opens is determined by the stroke of the crank P. Another mechanism is described for regulating the opening, in which the stroke of the actuating-crank is fixed, but the stroke of the lever L is limited by moving the box with the clockwork and crank on the periphery of the box containing the shutter. For long exposures the speed is regulated by a brake, or the latch on the outside of the case is removed to allow the releasing-pawl to get into the path of a stop which holds the shutter open for the required time; for instantaneous exposures the speed may be regulated by altering the tension of the actuating-spring.

5666. Lowdon, G. April 17.

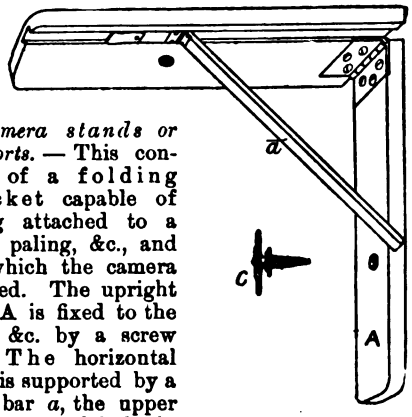

Camera stands or supports. — This consists of a folding bracket capable of being attached to a tree, paling, &c., and on which the camera is fixed. The upright part A is fixed to the tree &c. by a screw C. The horizontal part is supported by a stay bar *a*, the upper end of which is attached to a dovetail slide.

5755. Wilson, W. J. April 18.

Shutters, measuring speed of. A translucent scale A is fixed in front of a box B in which an electric or other light is fixed. An opaque disc D having a radial slit S is caused to revolve rapidly in front of the illuminated scale. If a photograph be taken with the shutter of which the speed is to be measured, the number of graduations appearing on the negative will indicate the speed. The speed of the disc is measured by a counter actuated by the worm E.

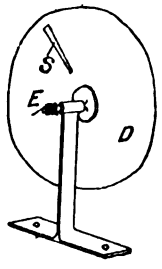

(*For other Drawing see next column.*)

5755.

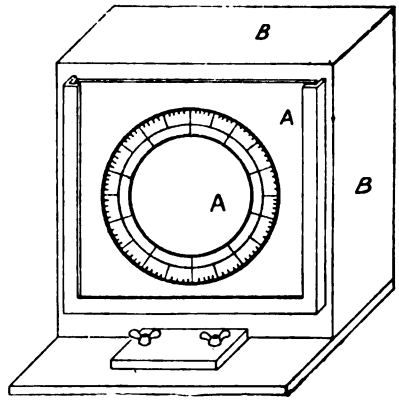

5770. Townshend, E., and **Thompson, T. H.** April 18.

Stands.—Relates to adjustable telescopic standards for lamps, music or book rests, seats for music stools, fire-screens, shaving glasses, spirit kettles, and other articles. To the lower end of the sliding tube A are hinged three grippers E, while on the upper end is a collar in which is pivoted a lever C, which operates a rod D with a conical plug X at its lower end. The standard is adjusted by pressing inwards the lever C, which lifts the rod D and raises the plug X clear of the grippers E, leaving the tube A free to slide in the standard B. On releasing the lever C, the spring F depresses the rod D, thereby causing the plug X to force the grippers against the standard B and secure the tube A in position.

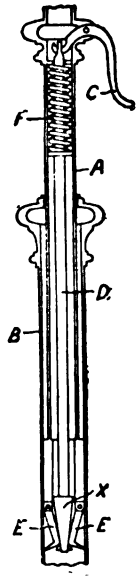

5869. Harmer, J. April 20.

Cameras; dark slides; shutters. — The main object is to facilitate the exchange of the dark

Digitized by Google

slide and focussing-screen. The frame B, in which the dark slide is carried, is connected to the focussing-screen C, and both together can be moved up or down between guides on the shield A fixed to

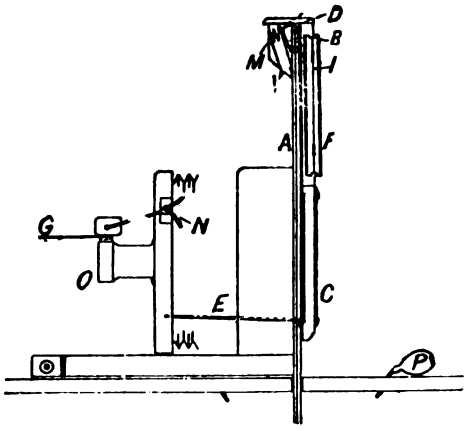

the back of the camera, so that either the focussing-screen or the dark slide may be brought opposite the lens. When the focussing-screen is in position a plunger D fixed to the top of B compresses the pneumatic ball M, and thereby opens the shutter G. When the dark slide is to be brought into position, a catch supporting C is withdrawn, and a shutter E is closed on C and prevents entrance of light, as C descends and F takes its place. For exposing, the shutter G is opened by squeezing the elastic ball P; to prevent this action from interfering with that from M, a double bellows or a three-way cock arrangement is fitted in connection with the shutter.

6583. Teed, H. W. May 3.

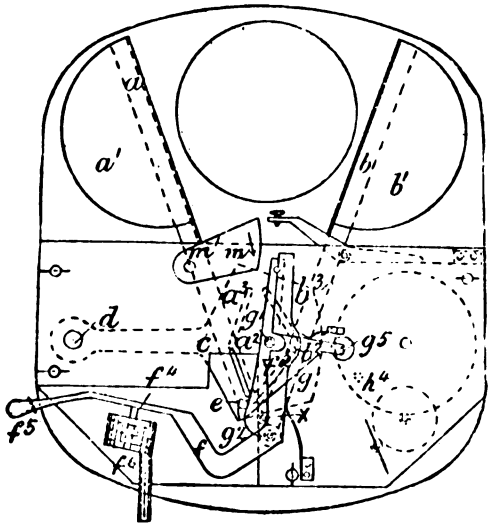

Shutters.—The shutter consists of two leaves a^1, b^1 carried on the ends of levers a, b to which an oscillating motion is imparted by the action of pins a^2, b^2 in curved slots a^3, b^3 in a plate c turning on the axis d. The shutter is set when a pin e on the plate c rests on the notch f^2, and may be released by hand by lifting the end f^5 of the lever f, or by the pneumatic arrangement f^6, f^4. For rapid exposures, the plate c falls to the bottom of its stroke, but for long exposures the pin e is caught on a hook g^2 on a lever g, fulcrumed on the axis g^1 and retained till the end g^5 of the lever is lifted by a stud h^4 on a train of clockwork. For holding the shutter open a cam m^1, m is turned down to lock the levers so as to detain the pin e on the hook g^2.

6814. Clark, S. M. May 8.

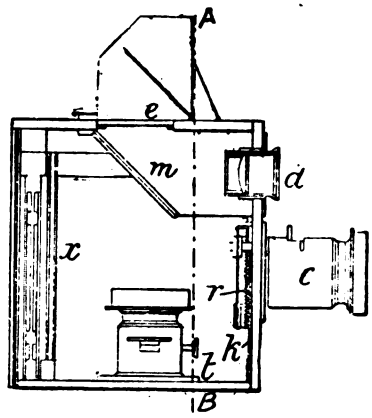

Cameras; dark slides.—The lens c is fitted on the camera by a bayonet-joint. For focussing and view-finding an auxiliary lens d is fitted above the ordinary lens, the image being thrown on a ground glass e by a reflector m. The dark slide x is double, the two plates being separated by an opaque partition of cloth; instead of shutters a cover is made to pass over the inner frame which carries the plates. The shutter consists of an aluminium disc k with exposing-aperture, rotated by a spiral spring r, and fitted with a setting-appliance. When packing, the lens is fixed inside the camera as at t.

6923. Methven, J. May 9.

Photometers.—The air supplied to photometric lamps is dried on its way to the lamp by being forced by a pan or other motor over or through trays containing desiccating-material, such as quicklime broken into small pieces. The lamp must be so arranged that the external undried air cannot come into contact with the flame. The desiccated air supply is controlled by a regulating cock or valve. The gas or vapour supply may be similarly dried. The result of the desiccation of the air supply and its regulation by a cock is a constant or standard light, the flame being rendered independent of the varying barometric and thermometric conditions of the atmosphere

Digitized by Google

6950. Boult, A. J., [*Eastman, G.*]. May 9.

Cameras; shutters; roller slides.—Consists of a rectangular box, in one end of which an instantaneous shutter is fitted, and in the other a roller slide. The shutter consists of a cylindrical tube S, with openings *s* in opposite sides, inside which the lens L is fixed on the cross-bar L¹, the whole being fitted inside a block B. The cylinder in the arrangement shown is rotated by a spiral spring and ratchet mechanism which is wound up by pulling a string wound on the barrel 10. At the other end of the cylinder is a releasing-arrangement consisting of a press knob and a lever 23, one of the ends of which catches on the stops 22. A spring serves as a brake and prevents retrograde movement. In modified forms, the cylinder S may be reciprocated, and may be placed in front or behind the lens. The roller slide, which for charging &c. may be drawn out of the end of the camera box, consists of a stock spool at *c*, a measuring and pricking roller at c^3, guide-rollers at c^4, c^4, a receiving-reel at c^5, and other necessary accessories.

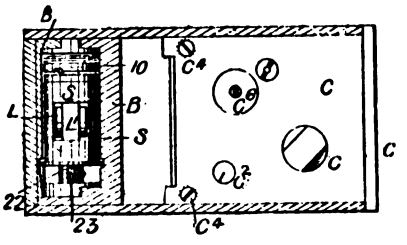

6992. Taylenure, M. May 10.

Dark slides; shutters.—The shutters B, B slide in channels in the frame of the slide, and are made so that they can be drawn completely out when making an exposure. The light is trapped by an india-rubber roller C. In a modified form, a U-spring covered with black velvet is used. Plates are placed back to back in the slide and separated by a removable partition E, against the end of which a spring F presses. A space H for the fingers, to facilitate the insertion and removal of the plates, is cut out of the top of the frame.

7044. Norris, R. May 11.

Sensitized plates and films.—The medium or vehicle used in these sensitized coatings is collodion. The object is to produce wet or dry plates or films with extra sensitiveness. Three processes are described. In the alkaline process the silver salt (nitrate) is added to the collodion, and the paper, glass, or the like is coated and floated in a solution of haloid salt, to which ether and alcohol have been added. After the haloid bath the film is placed successively in an alkaline bath, in a gelatine solution, and in a solution of iodide or bromide. In the acid process the collodion surface, charged with iodides &c., in the ordinary way, is submerged in a bath of haloid silver salts prepared by adding silver iodide, bromide, &c. to concentrated hot solutions of silver nitrate. Extra sensitiveness is obtained from these baths by adding large proportions of nitric acid. In the emulsion process the materials and processes just described are used to make emulsions for coating paper, glass, &c.

7176. Thompson, W. P., [*Bausch, E.*]. May 15.

Lens fittings; shutters.—Relates to a combined diaphragm and shutter. Each leaf C is pivoted at *b* to a fixed pivot, and connected to the adjacent leaves by a pin *c* and slot *d*. One of the leaves is actuated by a crank and connecting-rod and coiled spring, which are not shown in the Figure. The lever J, which liberates the spring-actuating mechanism, is lifted by a pneumatic device *r*, *q*, *p*. The lever J has a catch on the end, by setting which the device can be used either as a diaphragm, or as a shutter.

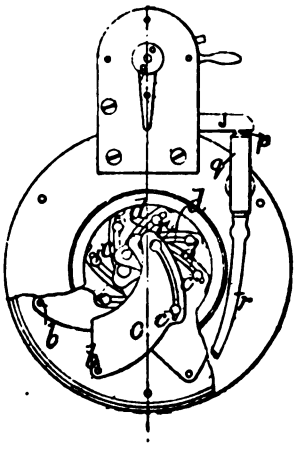

Digitized by Google

7427. Burt, H. A. May 19. *Drawings to Specification.*

Automatic coin-freed apparatus. — Consists in various means of preventing fraud &c. in coin-freed apparatus designed for exhibiting pictures, advertisements, and objects of interest, selling goods, imparting information, and other purposes. A minute photographic apparatus may be arranged to take a photograph of the fraudulent operator, the shutter being moved by a spring and released by the counterfeit, in falling down a special shoot provided for it, acting upon a lever connected with the catch of the shutter.

7432. McKellen, S. D. May 19.

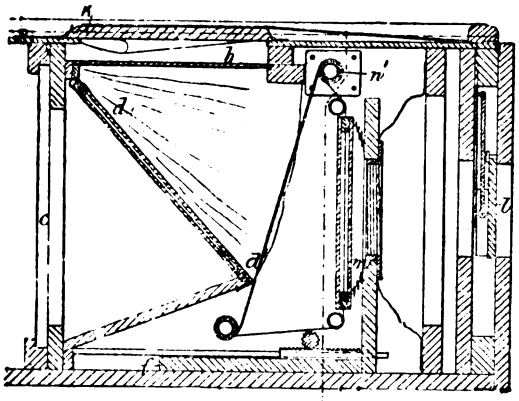

Cameras.—This camera may be used for long or instantaneous exposures. The focussing-glass *b* is fixed in the top of the camera, the image being thrown up by an inclined mirror made of non-actinic glass to prevent actinic light from reaching the sensitive plate *c*. The focussing-glass has a lid K, which may be connected to the lens cover *l* so that they open together. The exposure may be made by a blind shutter, actuated by a spring roller n^1, which at the same time folds up the mirror *d* by means of tapes attached to its movable end. By means of suitably-fixed stops the shutter may be held opened for slow exposures. A flexible diaphragm *m* is used to exclude all light except what passes through the lens.

7476. Lysaght, G. J. May 19.

Tripod and like stands.—The invention is shown applied to a walking-stick, but is applicable to artists' tripods. A case 2 with compartments 3 for holding sundries is attached to the stick, and when rolled round the latter is secured by a strap 4 or a stud.

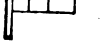

7556. Krebs, O. May 22.

Photo-mechanical printing.—A negative is taken of the object to be reproduced, and from this an image upon a prepared plate. The plate is first coated with a composition of albumen, soluble glass, and water, then washed and dried, heated, and coated with a solution of gelatine, bichromate of potash, bichromate of ammonia, alum, and water, and again heated. After exposure the plate is washed with water containing ammonia and alum. An impression is then taken in greasy ink upon a sheet of paper prepared as follows:—It is first saturated in a solution of 10 parts of gelatine, 5 of chloride of calcium, 2 of glycerine, and 5 of chromate of alum in water. It is then dried and moistened with a weak solution of water and tannin. The impression is transferred to the stone, and the latter damped with water and a little muriatic acid. The stone is then covered with a thin gum-arabic solution, dried for some time, and inked.

7942. Kerr, T. May 31.

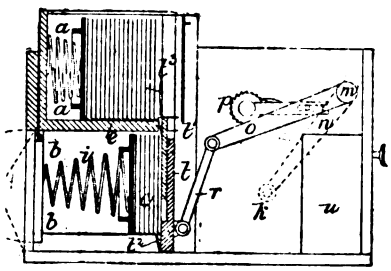

Cameras; change-boxes.—The lens of a detective camera is fitted, at *u*, at one end of the camera box, and a change-box consisting of a store chamber *b*, *b* and receiving-chamber *a*, *a* at the other end. The unexposed plates *c* are fed up by a spiral spring *i*, then after exposure transferred by a lever mechanism to the receiving-box *a*, *a*. The transferring-mechanism consists of two levers *n*, *o* turning on a fulcrum *m*, and actuated by a knob *k* projecting from one side of the camera box. The plates are lifted into the upper box by a slide *t* with projections t^2, connected to the free end of the lever *o* by a link *r*. Projections t^2 on an auxiliary slide t^1 hold back the front plate in the receiving-chamber to make room for the plate coming from the store chamber. An indicating-apparatus is actuated from the lever *o* by a lever and ratchet gear *p*.

8193. Mader, H., and **Oertel, F.** June 5.

Cameras.—The plate holder B is hinged to the main body or back A, and contains springs *e* for

Digitized by Google

holding the glass plates. The focussing is done by a central rack S and pinion R connected to the milled head P. The front, to which the lens F is fixed, can be adjusted vertically by a sliding bar

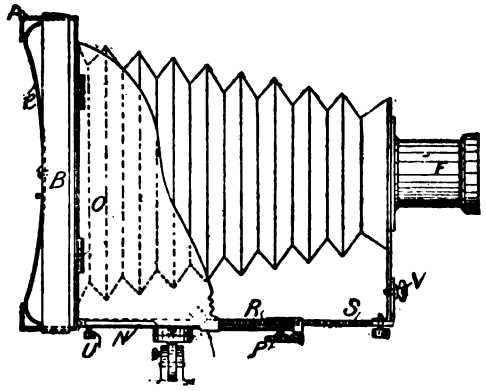

and set-screw V, and laterally by turning the rack on the pivot U and clamping it in any required position by a set-screw. The baseboard N and sides O are made of sheet metal and hinged to the back, so that they can be folded over the bellows when it is squeezed up. In modified forms, a lazy-tongs arrangement is used for focussing, and other devices for adjusting the front of the camera, such as the stand attachment with hinged piece to be turned to right or left.

8447. Turner, J. W. June 9.

Cameras; camera stands or supports. — The front or back of a camera is mounted on guides on the baseboard so that it can be easily slid out and in for focussing, and rigidly and quickly fastened at any desired point. The rails or guides *b* are undercut. The sliding pieces *c* turn under the rails, so that, when a wedge *m* is pushed into the recess *n*, the sliding pieces are clamped against the rails. The back *d* is hinged to lugs *f* by pivots *e*, and is held at any required angle by the bars *g*, the ends of which are movable in slots *j*. The same device may be used for securing the legs, stands, and other parts of photographic apparatus.

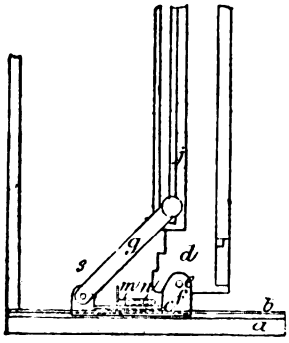

8508. Guttenberg, W. June 11.

Lamps, actinic. Relates to a magnesium lamp provided with a triangular smoke-tight glass case with a door *f* at one end through which the mixture of magnesium powder and potassium chlorate is inserted and ignited. The frame is jointed at the base *b*, *c* so as to yield slightly to the gaseous pressure, the whole being bound together by chains *h* which also serve for a shadowless suspension.

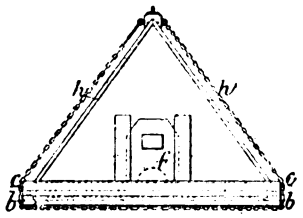

8518. Letalle, A. E., and **Billing, F.** June 11.

Colouring; sensitized films; copying drawings &c.; ornamenting by photography.—A sensitized film is made of gelatine and bichromate of potash, or gelatine and perchloride of iron and tartaric acid. In the first case this is exposed under a positive, and in the second under a negative. The plates are developed in a bath of cold water, and then coloured by immersion in a bath of dye. The above process is applicable for copying drawings, pictures, producing advertisements, ornamenting glass, &c.

8739. Pead, W. June 14.

Shutters.—The slide *c*, Fig. 1, of the shutter traverses in a slot formed between the two sides of the lens diaphragm or between guides on one side of the diaphragm, the exposure being made when the aperture *d* in the slide coincides with the aperture *e* in the lens diaphragm. The slide *c* is actuated by an elastic band *i* which passes over the hook *k*, and has its ends connected to two hooks *j*, *j* fixed to the frame of the shutter. The slide *c* is released by lifting the end of the lever *h*, and thereby forcing out a spring catch *f* from the hole *g* in the slide.

FIG. 1.

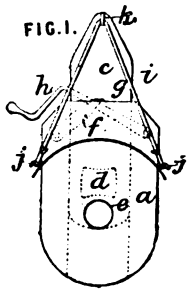

9244. Mills, J. L. June 25.

Photo-mechanical printing.—In engraving intaglio or relief printing-surfaces by aid of sand, emery, or like blast, a photograph in grain or stipple may

Digitized by Google

be taken on the plate or stone and used as a resist, either alone or in combination with hand stoppings of varnish, gum, &c.

9283. Harvey, T. W. June 26.

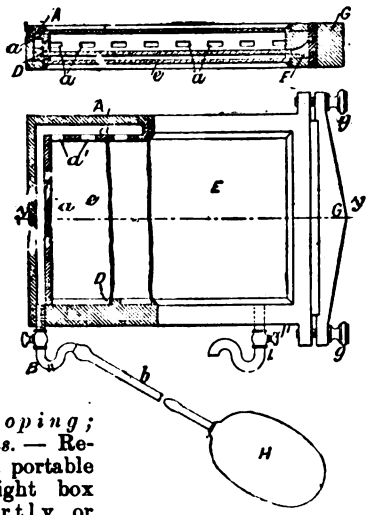

Developing; dark-rooms. — Relates to a portable water-tight box made partly or wholly of tinted glass impervious to actinic light, and provided with a tight-fitting removable cover and with pipe connections for introducing into and withdrawing from the box the developing-liquids. The Figures show a plan and elevation of the box. The top and bottom of the box consist of panes of tinted glass E and *e*, and are fitted in a rectangular frame A. The plate D to be developed is introduced into the box through the slit F, over which the cover G is then placed and clamped in position by the screws *g*, *g*. The developing-liquids are forced into and withdrawn from the box through the pipes *b*, B by a ball syringe H; they are not discharged directly into the box, but into a side passage or chamber *a*, which communicates with the interior of the box by openings a^1 to secure their uniform distribution over the surface of the plate. The air is allowed to escape from the box by a pipe I, which is bent to trap the light and fitted with a stop-cock I^1.

9327. Charles, P., [*Derogy, E. E. N.*]. June 26.

Cameras; change-boxes.—The plates before exposure are contained in a grooved box c^1; after exposure they are dropped into another box c^2. As the plates are exposed and drop down, the change-box is moved forward by a rack and pinion c^4, c^5. Each plate has an opaque back or is inserted in an opaque sheath. For indicating, the plate being exposed, an aperture is made in the side of the camera, opposite which numbers on the side of the change-box are shown. The focussing is effected by a pinion gearing with a rack beneath the lens *b*, and an indicator is attached to show the position of the lens for different distances. The shutter *f*

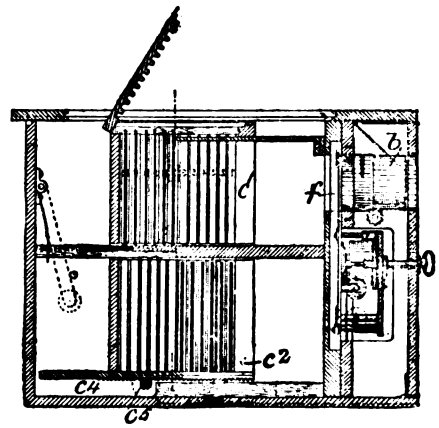

consists of a rotary disc with an exposure aperture, placed behind the lens, and actuated by a train of clockwork regulated by an adjustable brake as shown.

9501. Benson, W. A. S., Lovegrove, J., and **Hinton, E.,** [*trading as* W. A. S. Benson & Co.]. June 29.

Stands.—Relates to adjustable screw grips for telescopic lamp and other standards, and for electric pendent lamps. Consists of a stuffing-box with an adjustable india-rubber washer. This washer A is protected by two metal washers B, B, which are enclosed by the two parts C, D of the stuffing-box. The lower part D screws on to the base, while the upper part C is secured to D by a screw of, preferably, six threads to the inch, so that the sliding tube is released by giving C a half-turn.

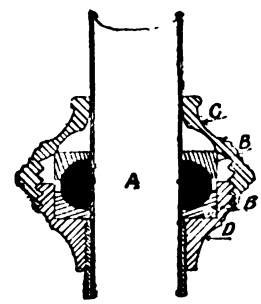

9518. Mavitta, W., [*trading as* W. H. Brown & Co.]. June 30.

Tripod and like stands for cameras &c. Each leg is in three parts; the bottom part, which is solid, is pivoted at a^6 between two strips A^3, forming the middle part. It is held extended by a spring catch, and has a spike at each end so that either end may rest on the ground. The middle part consists of two strips A^3 connected at one side by plates g^{11}, and at the top by a bolt g^3 which with

Digitized by Google

the nut g^5 and plates g^1 forms a clamp to connect the middle and top parts, H being a rubber &c. packing-piece. The strips A^1 forming the top part are connected below by a metal band, and on the

FIG. 15.

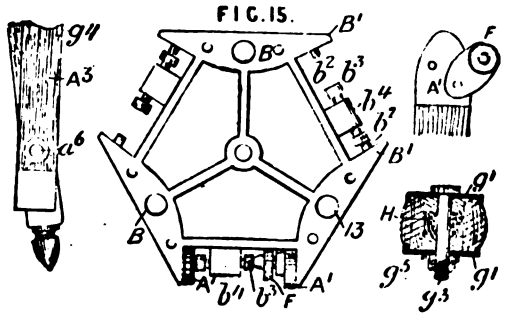

inner side of one of the strips is a pivoted lever with screwed socket for the set-screw F. The head B is shown in plan, in Fig. 15; to fix the legs each lever carrying the screws F is turned aside, and holes in the strips A^1 are sprung over the pivots b^2; the set-screws F are then adjusted, the legs being held between the lugs B^1 and the ends of the bolts b^3 which are loose in the lugs b^4. In a modification, the bolts b^3 are dispensed with, the set-screws F being made long enough to fill up the space between the strips A^1.

9711. Tylar, W. July 4.

Washing prints. Relates to a siphon apparatus by which a washing-trough can be charged and discharged. The siphon is clipped to the edge of the trough by a spring *a*. Water is supplied to the trough through the branch H and the short leg of the siphon, from which it is discharged by means of inclined jets *j*, *j*, *j* and baffle-plates *k* in different directions. The short leg of the siphon is double, the second passage communicating with the long leg of the siphon. To start the siphon, water is discharged down the long leg, by opening the valve *r* and thus admitting water from the supply passage *c*; the cap *t* may be turned round so as to close the end of the long leg till it is full.

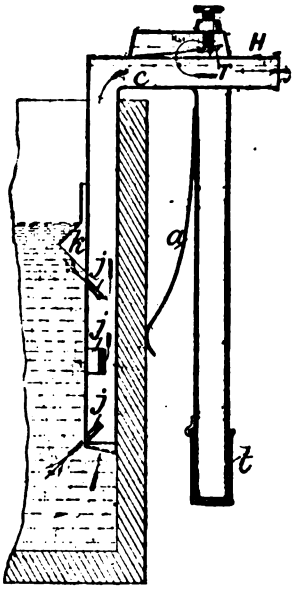

10,368. Laws, R. W. July 17.

Tripod and like stands, adjustable. The article to be supported is carried by a telescopic tube *b*, at the lower end of which is a bracket b^2 sliding in the outer tube *a*, whereon is fixed a rack. A pawl *c* is pivoted at c^2 to the bracket b^2, and is attached at c^3 to a rod *d*. The lower end of this rod is split at d^1, forming a spring to normally press the pawl *c* into contact with the rack. By raising the rod *d* the pawl is drawn clear of the rack, when the article supported may be raised or lowered.

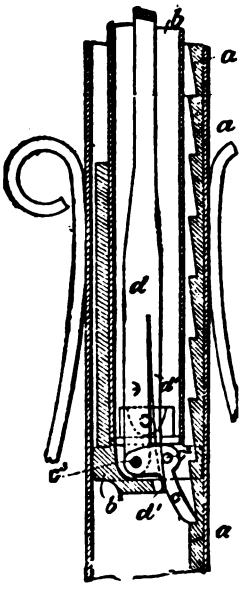

10,823. O'Reilly, W. July 26.

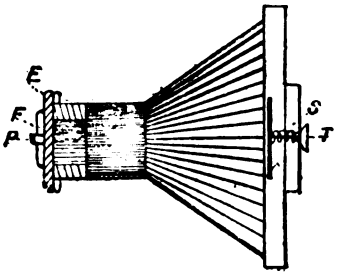

Cameras; change-boxes; shutters.—Relates to instantaneous cameras. The ground glass or sensitive plate is held rigidly in position by means of a small spiral spring S, which is held back by a wire and button T while the plate is being inserted. The plates are transferred to and from the dark slide by an opaque bag which is slipped over the carrier; it has metal plates fixed at the mouth to facilitate opening, closing, and attachment to slide. The shutter is combined with a removable cap. It consists of a flap E which, when released by a catch, is pulled open by a strong spring (not shown), which then slips off the projection P and allows the shutter to be closed by a spring F of less strength.

Digitized by Google

10,860. Morton, T., and **Baker, F. R.** July 27.

Stands.—Relates to telescopic standards for lamps &c. The lower end of the extension tube *b* forms a piston *c* having slots to receive the wedges *f*. Within the tube *b* is a rod *k* screw-threaded at its upper end to engage with a nut *m*, which by means of a collar *n* may be turned through a small angle, thereby causing the rod *k* to rise or fall. The lower end of the rod *k* is shaped to engage with the wedges *f*. When this rod is raised it forces the serrated edges of the wedges into contact with the outer tube *a*, and the extension tube *b* is held firm; on lowering the rod *k* the wedges are released, and the tube *b* may be raised or lowered. In a modification, the wedges are operated by a collar and nut screwing upon the lower end of the rod *k*; the nut *m* forms part of the tube *b*, the collar *n* being secured to the rod *k*.

10,864. Warner, W. H. July 27.

Washing prints. A siphon for photographic washing-troughs &c. consists of a bell-shaped vessel K inverted over the end of a tube A which forms the long leg of the siphon. The siphon is started by allowing water to flow through a hole G into the pipe A when the tap D is shut, then opening the tap when the trough is full. The bell may be fixed to the top of the tube A by screwing it to a bracket H, H¹.

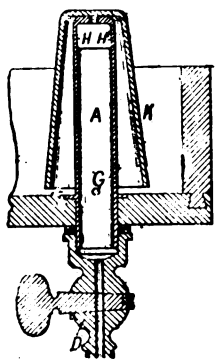

10,865. Warner, W. H. July 27.

Lifters or holders, plate and like.—Relates to a support for plates, films, &c. during the processes of developing, fixing, washing, aluming, and the like. In one form it consists of two bent plates A, B, which are placed as shown so that the edges only of the plates &c. C rest on the inclined surfaces A.

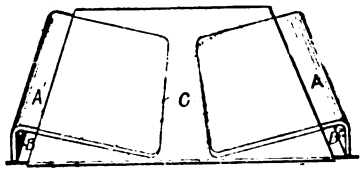

In other forms the edges of the surfaces A are turned up to hold the plates in position.

11,257. Deans, J. W., and **Foster, A. M.** Aug. 3.

Tripod and like stands for music stands, reading-desks, and the like. The rod *d* is adjusted within the hollow rod *e* by the screw *f*. Upon the rod *e* slide two collars *m*, *r*, of which the collar *m* may be adjusted by a screw &c. The legs *i* are jointed to lugs on the collar *m*, and are connected by three pairs of links *o* to the collar *r*. The links are square at their inner ends, so that they can only turn to a certain extent with regard to the collar *r*.

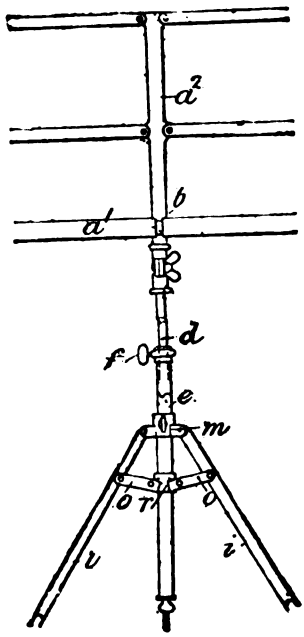

11,300. Harrison-Dearle, S. G., and **Ashcroft, T. H.** Aug. 4.

Cameras; shutters.—Relates to a detective camera, preferably made to resemble a picnic basket. The lens opening A, when the camera is not in use, may be covered by a label C. The dark slides are inserted in grooves E, E, access to the interior being obtained by opening a hinged side of the camera box. The shutter consists of a segmental plate with an exposure opening, which is caused to rotate by an elastic band or other suitable spring. The shutter is released by a wire F, which can be pulled by the hand by which

Digitized by Google

the camera is carried. A reflector is used as a finder, of which G, G are openings.

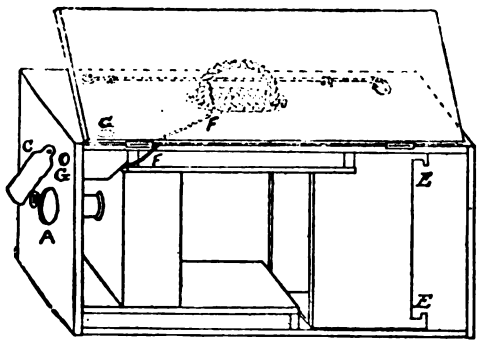

11,360. Pearsall, W. B., and Watts, A. J. Aug. 7.

Tripod and like stands.—A tripod A supports a ratchet-toothed stem B, on which is adjusted a bracket *e*, capable of rotation, by a spring catch *h*. The bracket may be used to support dentists' requisites. The adjustable stand may be applied as a reading-desk or easel.

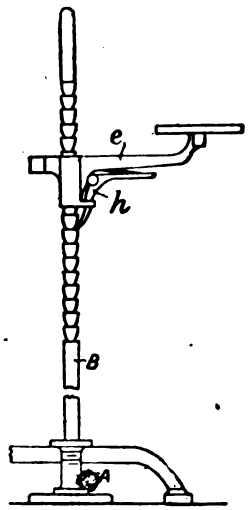

11,578. Decoudun, J. Aug. 10.

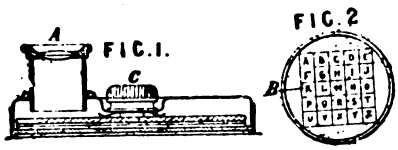

Actinometers for measuring the intensity of light in a photographic camera. Relates to improvements on the invention described in Specification No. 13,332, A.D. 1887, and consists of applying a lens A, Fig. 1, so that the eye may be applied close to the instrument instead of being placed at a distance of about 10 inches. C is the milled head for bringing the gradually-darkening luminous points before the eye-piece. A further modification consists in substituting a fixed plate B, Fig. 2, with reference letters or numbers cut through it for the rotary disc. The varyingly-translucent material is placed at the back, and the whole mounted in a tube with eye-piece and lens. This tube is held before the focussing-screen and the time of exposure estimated by the least visible letter, some of the letters being entirely obscured. The lens and eye-piece are adjustable for focussing, and removable for use as an ordinary focussing eye-piece.

12,181. Rayment, A. Aug. 23.

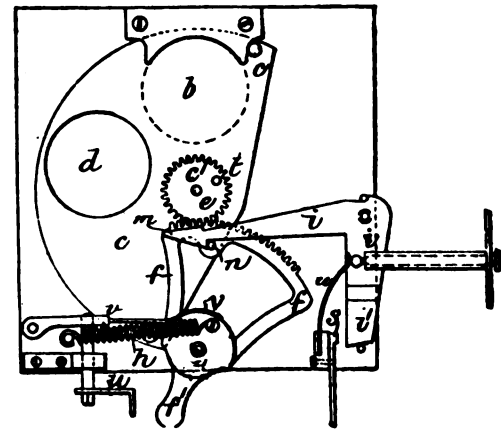

Shutters.—The shutter consists of a semicircular piece of metal *c*, with an exposure aperture *d*, which passes across the mouth of the lens *b*, as the plate rotates on the axis *e*. The shutter is actuated by a toothed quadrant *f* which gears into a pinion c^1 on the shutter, and is pulled to one side by the spring *h*. The shutter is set by pulling the trigger f^1 till a pin *n* falls into a tooth *m* on the end of the detent lever *i*. For slow exposures the stop *s* is removed, by which the end i^1 of the detent lever may be pushed further in, so that the end *i* comes in contact with a stop *t* on the pinion c^1 and holds the shutter open. The lever *i* is actuated by a push *o*. The speed of exposure is regulated by altering the pressure of the spring brake *v*, *v* by means of the crank *u*.

12,307. Ryder, H., and Ryder, W. H. Aug. 27.

Photo-mechanical printing.—Consists in preparing printing-surfaces and transfers, from a picture or photographs, by means of two negatives taken therefrom. One of the negatives is over-exposed, giving detail in the shadows, and the other is under-exposed, giving only the light parts. A printing-surface is produced from each negative, and the combined print gives the required picture, &c.

Digitized by Google

12,438. Beauchamp, F. Aug. 29.

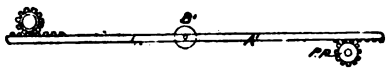

Dark slides; shutters.—Relates to the shutters of dark slides, the object being to prevent the slide from being drawn out with the plate uncovered, and to uncover the plate without having the shutter projecting at one side. In one form the shutter is in two halves which are hinged at, and open in, the middle. On the axes of two doors are toothed pinions P, P, which gear with a rack A^1, so that, when it is moved by the stud B^1, the two halves of the shutter open simultaneously. Cranks may be used instead of the pinions. In another modification, a blind shutter is used which winds on rollers.

12,474. Houssard, L. Aug. 30.

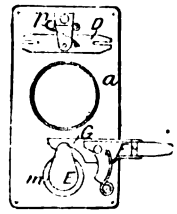

Shutters.—Two slides with round openings which coincide opposite the lens move in opposite directions in guides on the frame plate *a*. One of the slides is actuated by a pin on the crank E, which works in a horizontal slot in the slide, while the other side is simultaneously moved in the opposite direction by the rocking lever D, which has slots at each end for the reception of pins on the top corners of the slides. The crank E is actuated by a spiral spring which may be wound by a button to the required tension, and the speed of the exposure regulated by a brake which presses on the edge of a wheel *m* attached to the crank E. The spring *p* is intended to secure regularity of speed. The shutter is released or held open by two levers F and G, which may be worked singly or together, according as rapid or slow exposure is required, by pneumatic means. To hold the shutter open for focussing, a lever at one side of the frame may be used to lock the detaining-levers.

12,573. Scorer, W. Aug. 31.

Cameras.—Relates to arrangements for closing and folding the camera for adjusting the swing back and for focussing. The base, the underside of which is shown in the Figure, consists of three principal parts A, B, C, the part A being formed to slide in the part B when a screw *b* is turned. The part A is hinged to the part C to admit of folding at right-angles to the latter, screws *e* and a sliding clamp D being provided for securing the parts in position when in use. A turntable *k*, *l*, operated by a pinion *m*, is provided for shifting the camera without moving the legs of the tripod, the studs of which legs are specially mounted and arranged to enter slots K. A plate E, pivoted to

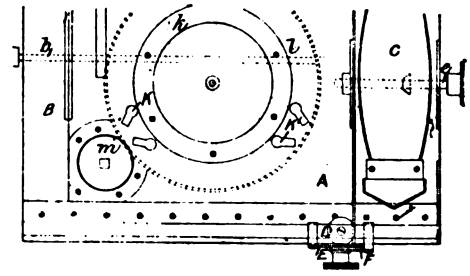

the clamp, is fixed to the portion of the camera which carries the back thereof containing the focussing-glass and film-holder frame. To the latter is attached one end of a bellows, the other end being connected to the front which is fixed to the part C; the frame is held in any required position by a pivoted slotted plate F and screw. The frame B may be strengthened by tie-bars &c. A hook holds the camera together when closed. The Provisional Specification states that the screw *b* may be used for focussing.

12,707. Bouckaert, C. March 3, [*date claimed under Sec. 103 of Patents &c. Act, A.D. 1883*].

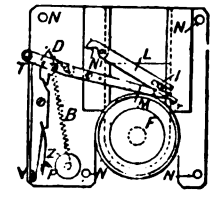

Shutters.—Relates to a shutter which may be placed in front of the lens or behind the lens inside the camera. It can be set and regulated from the outside of the camera, and can be put in action without uncovering the lens. The slide F of the shutter rises and falls between guides fixed on a plate N, N, which is fixed on the camera. The slide F is raised by the pressure on the pivot I of the lever D, M, which is actuated by the spiral spring B, of which the tension can be regulated by a lever to which it is connected; and it is depressed by the pressure on the pivot I of the lever L, which is actuated by a stud on the lever D, M pressing on N^1. The lever D, M is set and released by the detent I, which is fitted with a back pressure spring Z and pressure piece V. The lever D, M is set by the knob T; and stops are fitted, where necessary, to limit the movements of the shutter. The speed of the shutter may be regulated by a flyer actuated by a rack and pinion.

Digitized by Google

12,915. Roussel, T. C., and Bull, A. S. Sept. 6.

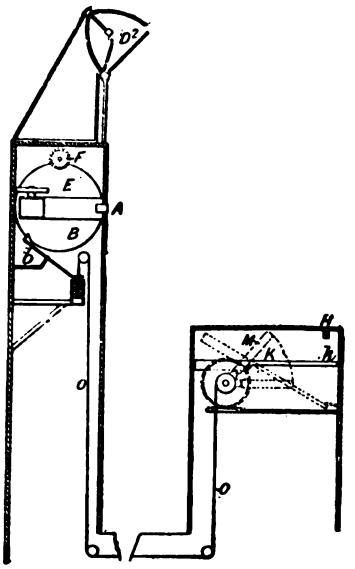

Automatic coin-freed apparatus.—Relates to means for operating photographic apparatus by coin-liberated mechanism. When the detent *b* is withdrawn by the action of the coin, the wheel B is turned round by the action of a spring. There are several projections (not shown) on the face of the wheel B, which actuate the roller holder E, the shutter of the lens A, the wheel F which is connected to a drum for delivering address cards, and turn on the gas to the lamp D^2, which lights the person to be photographed. The coin is dropped through the slit H, and falls on the end of a lever K, which is depressed by its weight into the position shown in dotted lines. This unlocks the axis, which can now be turned by a lever M from the outside. The movement of this axis, by means of a cord *o*, actuates the detent *b*. The mechanism for delivering the numbered address cards may also be actuated by coin mechanism.

13,082. Barrett, F. Sept. 10.

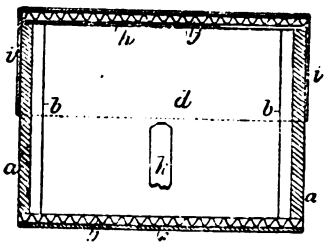

Plate boxes.—The ends *a* of the box are of wood, and have grooves *b* to receive the plates. Removable sides *d* may also be placed in these grooves, the permanent outer sides as well as the bottom *f* of the box being of cardboard or the like. Folding flaps *h* are hinged to each of the ends and sides of the box. A lid *i* of cardboard with a deep flange is placed over the flaps. The bottom and lid of the box are strengthened by corrugated paper *j*. A tape *k* is used for facilitating the removal of the plates from the box.

13,145. Böhm, E. Sept. 11.

Lamps.—Relates to incandescent electric lamps for photography &c. In the form shown in Fig. 1, the bulb A is surrounded by an outer globe *a*, the intermediate space being filled with water or other suitable liquid; the outer globe may be provided with a nozzle for introducing the water, which may be coloured. The outer globe may be provided with a lens *b*, Fig. 3, which may be solid, and cast or otherwise formed upon the globe; or may consist of a hollow projection which is filled with the liquid surrounding the lamp bulb. The solid lens may be applied to ordinary lamp bulbs fitted with a reflector, preferably formed by silvering or enamelling a portion of the bulb, and more than one lens may be used.

FIG. 1.

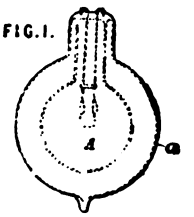

FIG. 3.

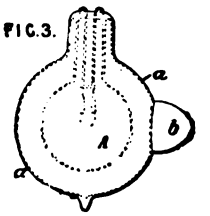

13,301. Bond, H. C. Sept. 14.

Photo-mechanical printing; colouring; producing magic-lantern slides.—In producing coloured photographs three negatives are taken of the landscape or other object to be photographed, with screens of different colours behind the lens. Each colour screen allows all the light to pass except one of the primary colours red, blue, and yellow. Prints are taken from the three negatives on bichromatized gelatine, and the images transferred to the lithographic stone. Each of the three images is now inked up with the suitable coloured ink, and each colour is printed in turn on to the same piece of paper as in chromo-lithography. For magic-lantern slides the images are printed on pieces of transparent gelatine tissue, which are dyed with the suitable colour after development, and superimposed.

Digitized by Google

13,868. Ramsden, J. W. Sept. 26.

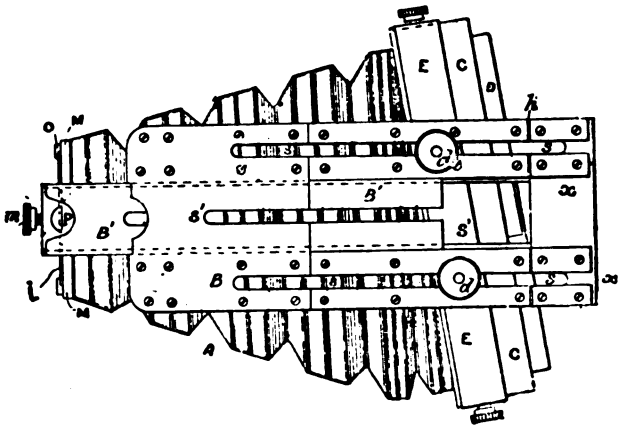

Cameras.—The baseboard consists of a central bar B^1, which slides in a board B. The bar B^1 is clamped to the stand by a screw passing through a central slot s^1, s^1, which screw also clamps the two halves of the baseboard together. The back *c* turns on a horizontal axis and is supported on a U-shaped plate E, which can be clamped at any required angle by the two screws *d*, *d* passing through slots *s*, *s* in the section B of the board. The tail part *x* of the baseboard is hinged at *h* for folding purposes. The lens board L is supported by a pillar P, which may be clamped at any height by the screw *m*, and slides in guides *o* in the front M. The focussing-cloth may be fixed to the back by springs. The focussing-plate is fixed in the back by hinged catches at the top.

Dark slides.—The dark slides D are made square and fitted with carriers so that the plate may be placed in a vertical or horizontal position. To facilitate inserting and removing the plates, a spring is placed in the bottom of one of the grooves of the slide.

Tripod and like stands.—The legs are in two parts which slide on one another, and are split and held apart by a hinged strut.

14,593. Berly, J. A., [*Tiquet, F.*]. Oct. 11.

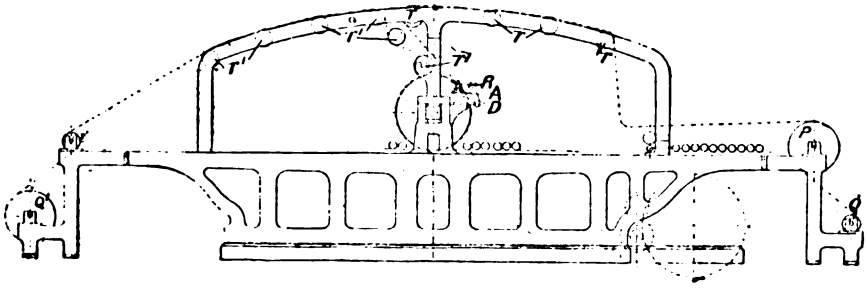

Photo-mechanical printing.—Relates to printing in one or several colours in a single-cylinder letterpress, lithographic, phototypic, or copper-plate machine. For holding the paper while printing, a perforated tube A is provided along the cylinder, and is connected to a vacuum chamber. The paper is pressed well into contact with the tube by a flat bar R on levers D. The air pressure is controlled automatically by a two-way cock &c. The web passes from a roll P round guide-rollers *r*, r^1 to a receiving-roll, and for the second printing passes in the opposite direction. Set-off webs Q, Q^1 are rolled in with the printed paper. When very thin material is printed, a supporting-web is used and passed through the machine. This supporting-web is perforated, near its edges, to correspond with registering-pins on the cylinder.

14,652. Kerry, W. H. R. Oct. 12.

Cameras; change-boxes; shutters.—Relates to a combined camera and change-box, in the form of a box with four compartments. The plates j^1 are stored in the upper back compartment in a

Digitized by Google

removable box B. They are contained in sheaths *j* of some opaque material, and are dropped down through a slit into a carrier J for exposure. After

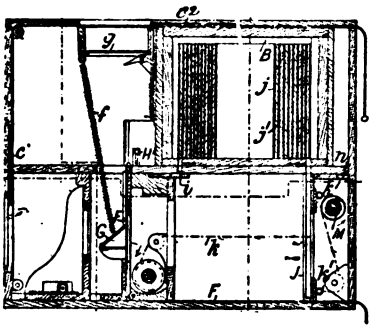

exposure the carrier J, with the plate, is pulled forward by a windlass and strings *k*, against the action of a returning-spring M attached by strings k^1 to the back, the camera is turned upside down, and the exposed plate drops through the slit *i* back into the store compartment. The shutter, which consists of a blind F wound on a roller or a slide, is pulled up by the springs *f*, after being released by a catch H^1. A flap or other shutter may be fitted for slow exposures. On the front side of the shutter is fixed a small mirror G, which throws the image upon the horizontal focussing-plate *g*. Sliding doors c^2 and c^1 are fitted to cover the focussing-plate and the lens aperture, respectively, after exposure.

14,696. Watson, W. Oct. 12.

Dark slides; shutters.—To make the hinged joints in the shutters of dark slides light-tight, a piece A is fitted in the joints as shown.

14,801. Inkpen, G. G. Oct. 15.

Tripod and like stands.—A base-plate B, for carrying a camera or surveying-instrument and provided with levelling-screws *b* or a ball-and-socket joint, is secured by a centre screw *d* to the handle of a walking-stick A. The ferrule *a* of the stick screws into a folding tripod, the legs of which are distended by rods E attached at their inner ends to a nut F on the screw *f*. The extremities of the tripod legs are attached by guys D to the base-plate B. The apparatus is shown folded in Fig. 6.

FIG. 1.

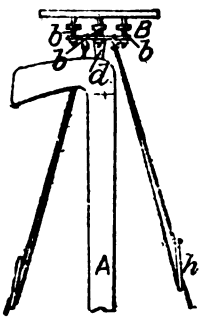

FIG. 6.

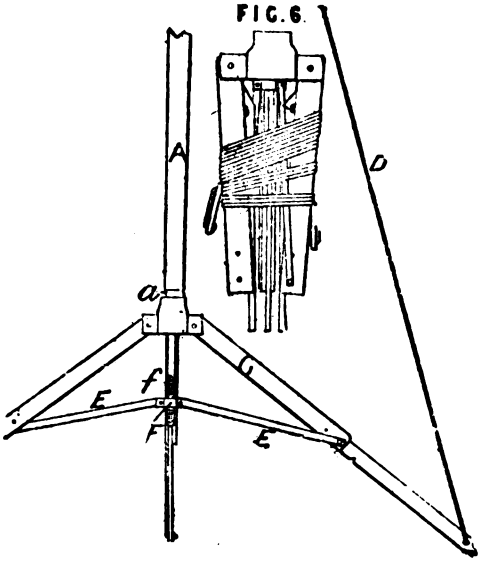

14,820. Darwin, L. Oct. 15.

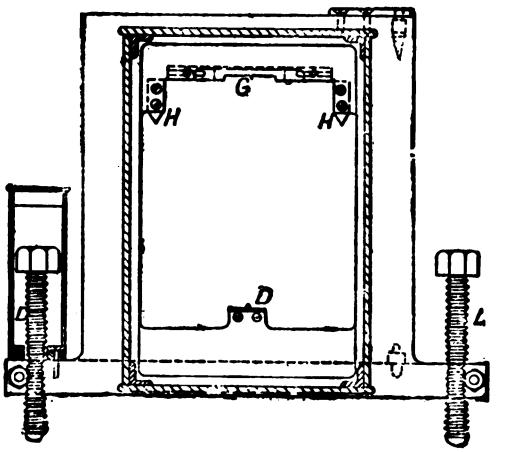

Cameras combined with sighting-apparatus. To test the accuracy of the aim of ordnance without firing, a photograph of the object is taken, together with determining sight marks. A cross-section is shown through the camera, which is fixed on the gun, against an object point on which the photographic plate is pressed. D is the sight and G, H are additional sights for determining the horizontal and vertical axes of the plate. There are adjusting-screws L. The distance is inferred by observing the apparent size on the photograph of a known object, such as the mast of a ship.

Digitized by Google

14,949. Davis, E. C. J. Oct. 17.

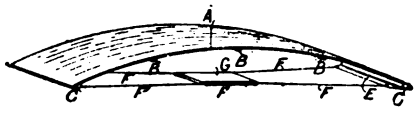

Copying documents, drawings, &c.; printing.—This appliance is more especially applicable for copying drawings, documents, and the like by photography. A tracing or other translucent document is placed in contact with a sheet of sensitized paper and stretched over a curved surface. Several methods of constructing the curved surface may be employed, and several methods of clipping the ends of the paper. One form is shown in the Figure. The flexible board A is fitted with clips E, C at the ends. The ends of the tracing and sensitive paper are inserted in the clips when the board is straight. On pulling the string F, by turning round the board G to which they are connected, the clips are tightened and the board A is bent into a curved shape. The board is strengthened by cross-bars B, B. Several devices are described for making the curvature of the board uniform, and several for tightening the strings F. Frames and bars for supporting the curved surface may be used.

15,024. Wood, J. Oct. 19.

Washing; racks for washing and drying negatives &c. Relates to a trough for washing and rack for drying photographic negatives or prints. When negatives are to be washed they are placed in a rack with an open top and bottom, and adjustable for different sizes of plates, where they are afterwards allowed to dry. This rack with the plates is lowered into the trough D, and after washing is lifted out and suspended by its handles, to dry the plates. When prints are to be washed they are placed in the trough D, which has a curved bottom D^1, D^1, to promote circulation, an inlet pipe *d*, and an overflow or discharge pipe E^3, placed in a side chamber E communicating with the washing-trough by a number of openings. The overflow pipe E^3 may be converted into a siphon by plugging up the opening in the top of the bend.

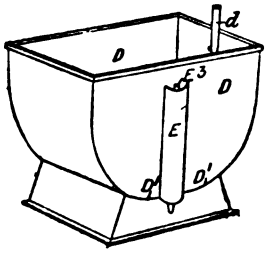

15,068. Graham, T. P. Oct. 19.

Studio accessories.—For photographing children &c. the camera is placed behind shutters B of an ornamental stand. Above the shutters is arranged a cuckoo clock or equivalent device *a*, which, when the lens is exposed, is set in action by electrical, mechanical, or pneumatic means, for the purpose of attracting the attention of the sitter.

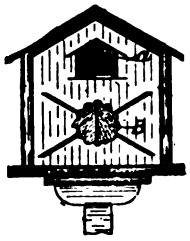

15,376. Goodall, A. H. Oct. 25.

Vignetting.—Relates to a pair of cutting-pliers for serrating the edges of cards &c., used in vignetting photographs. The pliers are formed like ticket cutters with one or more V-shaped cutting-blades A working in the jaw B. The handles A^1, B^1 are bent as shown to clear the card being cut. A spring D opens the jaws through a space regulated by a stop E.

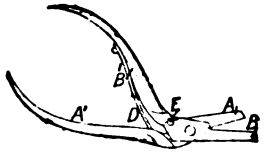

15,454. McKellen, S. D., and McKellen, J. D. Oct. 27.

Cameras; change-boxes.—Cameras of the detective class are formed of one box or of two boxes, which telescope together, and are provided with an attached change-box X for holding any number of plates *m*. The box X is fitted with a hinged cover O, which, when opened, allows the plates to assume the position shown, so that the front one can be readily taken out. On closing the cover, the

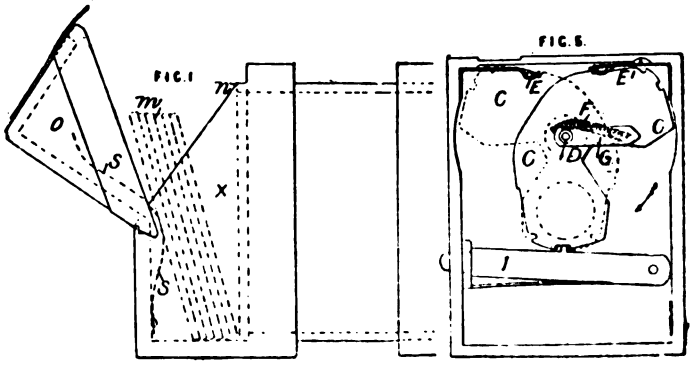

Digitized by Google

plates are pushed forwards by a spring S, the front plate being brought into focus by bearing against the rabbet *n*. The plates are changed in an opaque bag. When telescopic boxes are used the inner one is graduated and numbered to indicate when the camera is in focus for various distances. The front of the camera forms a shutter, which may be detached and used for an ordinary camera.

Shutters.—Rapid shutters are set ready for action without moving the exposure aperture across the lens, by reversing the direction of the actuating-spring or power. The shutter may be in front of the lens. Fig. 5 shows a rear view of one form of shutter, in the set position. The cover C is shaped as shown, and is pivoted at D to rotate from the position shown in full lines to that shown dotted and *vice versâ*. It is actuated by a spring F attached to the cover and to a carrier G. The latter can be rotated to operate the cover in either direction by means of a knob on the front of the shutter. The cover is released by a catch lever I, and is prevented from recoiling by catches E, E¹, which are released on reversing the carrier G.

15,723. Crooke, W., and Coster, J. Nov. 1.

Head-rests. — The rest D is connected by links C, B to a base-plate A adapted to be held against the wall or background by the pressure of the head of the sitter. The joints are held rigid by spring pawls *a*, *b* taking into toothed sectors. A lengthening-tube or arm, secured by a ratchet catch or set-screw, may be added.

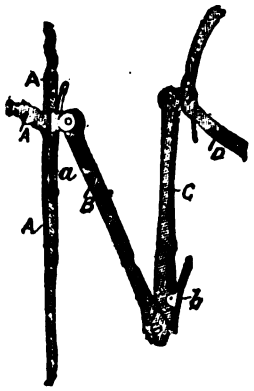

15,901. Tomlinson, C. Nov. 3.

Printing.—The side-pieces of the printing-frame are of the section shown in Fig. 1, and the ends are simultaneously rabbeted by cutters placed at the required distance apart to receive the end-pieces *b*, which are of uniform section. The joints are further secured by pins or screws &c.

FIG. 1.

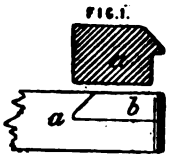

16,224. Lyon, J. Nov. 9.

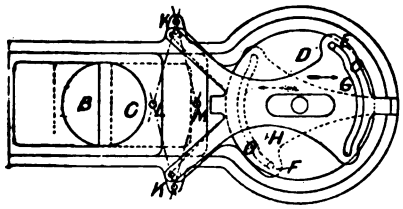

Shutters.—The object is to reduce the time of opening and closing in relation to the time during which the shutter is fully open. The shutter consists of two slides B and C, which are reciprocated by levers K, L and K, M, connected at points near their fulcra K, K to two reciprocating plates G and H. The plates are actuated by crank-pins E and F, fixed diametrically opposite, on the disc D. The crank-pins work in slots O, O in the plates G and H, which are concentric with the crank disc for the greater part of their course, but have sudden curves at each end for effecting the opening and closing of the shutter.

16,537. Oldham, W. Nov. 14.

Developing.—The developer consists of one or two dry powders which are placed in the developing-dish and mixed with water before use. The single-powder developer, in one form, contains hydrokinone, sulphite of soda, metasulphite of soda, and subcarbonate of soda. The two-powder developer contains in one packet hydrokinone, sulphite of soda, and metasulphite of soda; in the other packet, subcarbonate of soda.

16,677. Zerr, E. Nov. 16.

Sensitized plates; developing. — Relates to the manufacture of designs, pictures, medallions, and the like in relief, cameo, or intaglio. A photographic negative is obtained in the usual manner, the sensitive plate employed being prepared by coating a glass plate with an emulsion of gelatine and gum tragacanth, and sensitizing the same by a second coat of an emulsion of bichromate of potash, dextrin, and gelatine; the exposure may vary from one-half to two hours. The plate is developed by placing it in water until the gelatine softens, and then repeatedly adding quantities of glacial acetic acid. The acid dissolves portions of the upper dextrin-gelatine layer and produces a negative in relief, from which a plaster-of-Paris mould can be obtained, this being employed for producing any number of metal, porcelain, plaster-of-Paris, or like casts.

Digitized by Google

16,715. Brown, A. R. Nov. 17.

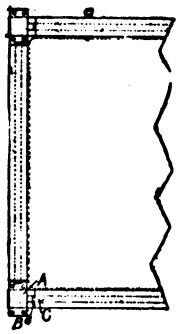

Printing; copying documents, drawings, &c.—Relates to apparatus by which two tracings can, if desired, be printed or copied at the same time, and any creasings removed. The tracings are secured to both sides of a frame &c. A, by spring clips &c. Between the tracings, and within the frame, is an air &c. bag or cushion of india-rubber, having on both sides the sensitized paper. By expanding this bag the tracings can be stretched to any required extent. The frame may be grooved to receive rods for securing the tracings, or it may be otherwise modified. For the frame, a drawing-board &c. may be used, and for the bag may be substituted a sheet of cardboard &c.

16,785. Adams, W. P. Nov. 19. *Drawings to Specification.*

Producing magic-lantern slides.—Consists in constructing slides of flexible and transparent substance such as gelatine, algin compound, or celluloid, in square form or in strips. The slides may be prepared by photography as follows:—Each view is printed on "transferrotype paper," squeezed in a row on a level glass surface, polished with French chalk, and the paper removed with hot water, leaving the film on the glass. A solution of gelatine is then poured over and when set is washed with chrome alum and soaked in a solution of glycerine. When dry the strip is cut as required and stripped from the glass.

16,827. Towers, A. Nov. 20.

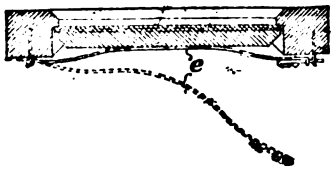

Printing.—The backs of printing-frames are secured by bow-springs *e* hinged at one end, and fastened at the other by a turn-button, or bolt and staple, &c.

16,894. Baker, W. R. Nov. 20.

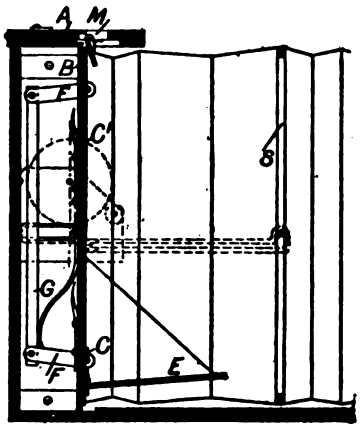

Cameras; change-boxes; dark slides.—At the back of the camera is a change-box A, having a movable frame B in front, to the top and bottom of which are hinged two doors C, C¹. These doors have on their forward side white paper &c., which serves as a focussing-screen, the adjustment being effected by moving the frame B. The back of the box is closed by a door hinged to the bottom. The plates are separated by diaphragms of vulcanite &c. to exclude light from the others on exposing the front plate, and are pressed forward by springs at the back. To change them, a light-tight cuff is provided for the insertion of the hand. For focussing, the eye is placed at an aperture M in the top, a hinged mirror E at the bottom being used to reflect the image. A collapsable eye-piece or rest is also used. The frame B is actuated by a cog-wheel and rack, and the doors C, C¹ are lifted in a similar manner to expose the plate, they being connected with a lever G attached to the rack by a lever F, so as to be opened and closed simultaneously. In some cases the plates are held in dark slides, in which case the shutters of the latter, which are in parts corresponding with the doors C, C¹, are adapted to open and shut with these. The shutters of the dark slides are provided with a catch or fastening having a projection which, abutting against the side of the box, releases the shutter on insertion of the dark slide, but automatically secures them on withdrawal. The dark slides are inserted from the top of the box. The camera bellows is provided with a strengthening-piece S.

17,100. Elliott, J., and Elliott, F. Nov. 24.

Embossing photographs on thin metal sheets. The embossing is performed by working upon thin metal sheets upon which photographs have been pasted or produced, such as lead or tin foil, with hand tools, until the desired relief is obtained.

Digitized by Google

17,198. Perken, E., Perken, F. L., and **Rayment, A.,** [*trading as* Perken, Son, & Rayment], and **Pead, W.** Nov. 26.

Shutters.—A slide *a* is thrown up by the action of a spring lever, which is released by the lever *e* upon a stud a^1 fixed on the slide *a*. For holding open the shutter for focussing, the slide is retained in its elevated position by a pin *o* on the crank lever *e*, which drops into a notch in the side of the slide, the lever *e* being held in the proper position by a brake *s*. For slow exposures the slide is held up by the action of the pneumatic piston through the studs g^1, g^1 on the lever *e*, its movement being limited by the lever *f*. The exposure continues as long as the pneumatic pressure is maintained. For rapid exposures the down-stroke of the slide is accelerated by a spring slide *i*, which has been previously raised, and is released by a hammer, when properly set, striking against the catch *z*.

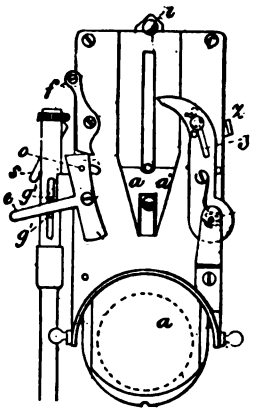

17,298. Grimston, G. S. Nov. 28.

Shutters. — Relates to rotary and sliding shutters for working between or in front of the lenses, and adapted to give a rapid or a slow exposure. The Figure shows a reciprocating sliding shutter A, for working in the diaphragm slot of a lens. The shutter is pivoted to a rotary disc D notched at 1, 2, 3 and provided with a semicircular guide I. The disc D is rotated in the direction of the arrow by a spring C, the tension of which may be regulated by an arm M. The shutter is shown set for giving a slow exposure. It is released by a pneumatic device G operating a lever F carrying a pin E engaging the notch 2. The pin E travels between the rotating disc B and the guide I, by which it is deflected so as to engage the notch 1 and hold the shutter open until the lever F is again operated, when the disc completes its travel, and the pin E enters the notch 3. To prevent shock when the pin enters a notch, the lever F is carried by a spring L, and a pin N on the disc strikes a spring *o*. For rapid exposures the pin E is set in the notch 3, and when released the disc makes a complete rotation, the pin passing outside the guide I, which prevents it from entering the notches 1, 3. For rotary shutters the exposure aperture is formed in the disc D, which then forms the shutter.

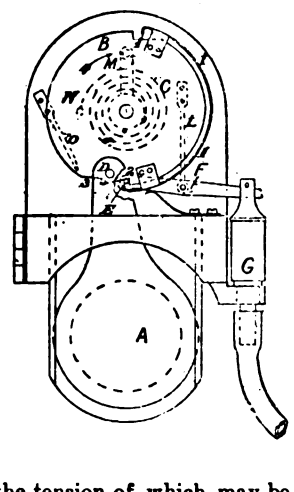

17,328. Redding, H. J. Nov. 28. *Amended.*

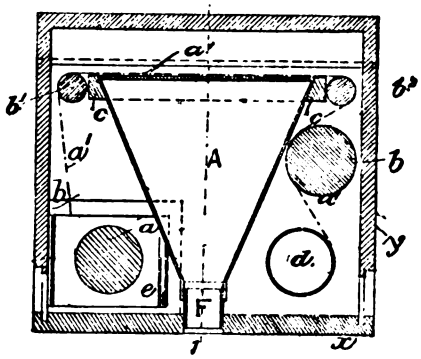

Cameras; roller slides. — Relates to an instantaneous or detective camera, fitted with a roller slide and rapid shutter. The rollers of the roller slide are arranged at the sides of the dark chamber A of the camera, but are enclosed by the sides of the outer box *x*, *y*. The store spool *a* can be removed for filling, and is pressed on at one end by a spring *e*, to stretch the film as it is drawn off. The film a^1 is carried back over two guide-rollers b^1, b^2, then over a measuring-roller *b*, which makes a clicking sound at each revolution, and on to the receiving-spool *d*, which is turned by a key outside. A pricker on the end of a spring (not shown) is used to mark off each length of paper. A finder, consisting of an inclined reflector with a concave lens, is fitted on the upper part of the camera box. The camera may be mounted in a leather or other suitable case, the top and back parts of which open and allow access to the camera.

Shutters.—The shutter consists of a quadrant-shaped piece of metal, with an exposing-aperture in the centre, which can be pulled to either side by an elastic band, one of which is fixed to a slide, which may be moved to either side of the camera. It is thus unnecessary to turn the quadrant back for resetting the shutter.

Digitized by Google

17,656. Hinks, J. Dec. 4.

Stands. — Relates to extension standards for lamps or "other analogous purposes." A lever *d* pivoted at *e* presses upon a disc *g* at the top of the rod *f*, the lower end of which is connected by a cross-piece *h* to a short tubular piece, slit at *i*. The spring *k* normally forces upwards the rod *f* and jams the split tube *i* between the standard *a* and the conical end *c* of the tube *b*. By depressing the lever *d* the tube *i* is forced downwards so that the tube *b* may be raised or lowered. The cone *c* may be situated on the end of the rod *f*, a split tube or expansible wires being formed on, or attached to, the lower end of the tube *b*.

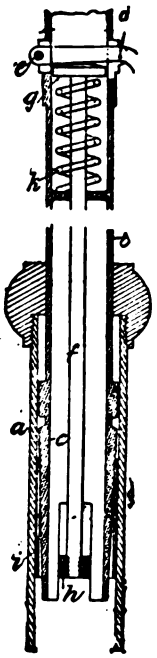

18,026. Gibbs, W. C., and Dornin, G. W. Dec. 11.

Cameras. — The case is combined with the camera. The end plates G and C of the case fold down and form respectively the tailboard and

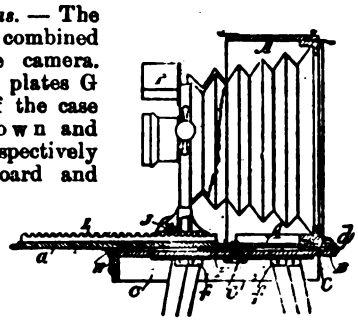

the plate to which the stand is attached. Focussing-racks I are fixed on the plate G, and gear with a pinion J connected to the front of the camera. In another form of the focussing-arrangement, the rough adjustment is made by notches in the guide-bars, and the fine adjustment by short racks and pinion. To enable the end plate C to be folded under the baseboard of the camera, it is connected to the back A of the camera by two hinges *c*, *d* and an intermediate plate D. The projecting pieces *f*, *f* in which the ends of the stand are fixed are connected to a plate F fixed on the under side of C, the whole being fixed to the camera back by the screw c^1 and to G by the spring catch E. A finder P is fixed to the front of the camera by an attachment which enables it to be easily readjusted when the camera is turned from a vertical to the horizontal position or *vice versâ*.

18,099. Watson, T. P. Dec. 11.

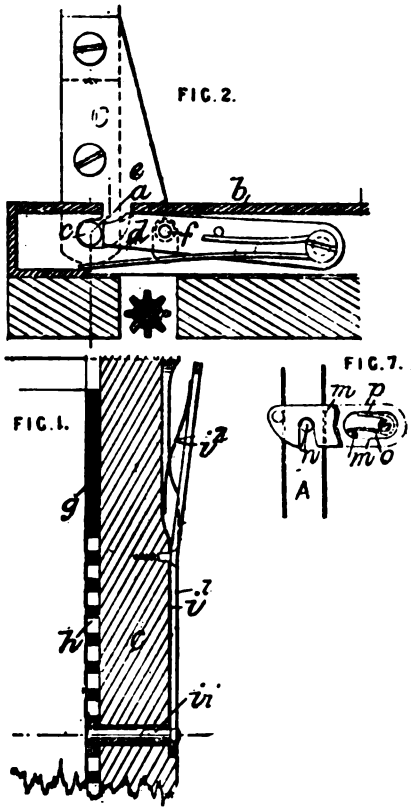

Cameras.—Relates to the "Kinnear" or other collapsable type. The frame C, Fig. 2, of the front or lens plate or slide has pivots *c* which enter slots *a* in the plate *b* attached to the travelling frame or slide of the baseboard. These pivots on entering the slots push down spring latches *d*, which normally close the openings, and which serve to secure the pivots when these are in position. To release the pivots the frame C is swung back, when projections *e* on the frame abut against studs *f* on the latches, thus depressing them. The lens slide has convex sliding edges *g*, Fig. 1, and one edge is cut with teeth *h* to engage with a spring-actuated bolt pin *i*, thus enabling the slide to be retained at any height. The bolt pin is mounted on a lever i^1 having a projecting end, which, when the frame C is turned face downwards to collapse the camera, abuts against the part *b*, thus withdrawing the bolt pin so that the lens plate can adjust itself so as not to strain the bellows. An automatic catch *m*, Fig. 7, is used to secure the back to the baseboard A when the camera is

Digitized by Google

collapsed. The catch *m* is pivoted to the back, and has an inwardly-projecting stud m^1 which abuts against a spring *p* in a recess O, so that the spring tends to retain the catch closed. The catch has a bevelled end which, on closing the camera, rides over the securing-stud *n* on the base A. The Provisional Specification also describes an arrangement by which the back may be moved towards the front, and swung towards the side.

18,150. Tourtin, E., and Parsy, L. Dec. 12.

Shutters. — Relates to instantaneous shutters for photographic cameras. The shutter, which may be in front, behind, or between the lenses, is of the venetian-blind type, the laths *c* being pivoted to the frame of the camera. On the pivots at one side are mounted pinions *d*, which engage with a rack *e*. The rack is actuated to revolve the laths by an adjustable spring *g*, when the spring catch *f* which secures the rack is disengaged by a pneumatic &c. arrangement.

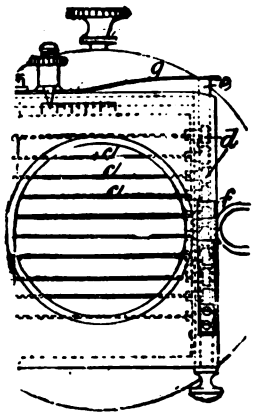

18,357. Herbert, H. Dec. 15.

Change-boxes.—The plates are placed in a box B, which is then inserted in a horizontal position into an outer box A. Stops P on the outer box move in grooves X in the inner, so as to prevent withdrawal until the stops are moved aside. The inner box has a sliding valve Z which covers a slit or opening at the inner end, and is actuated by means of projections O thereon engaging in inclined grooves in the outer box. To expose a plate the boxes are placed on end and the inner box withdrawn until arrested by the stops. The valve Z is thus moved aside from the end slit, which allows a plate at the back of the inner box to fall into the

FIG. 1.

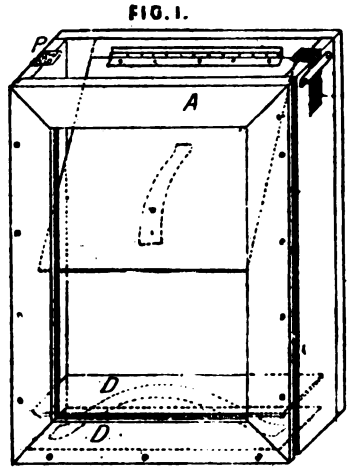

FIG. 2

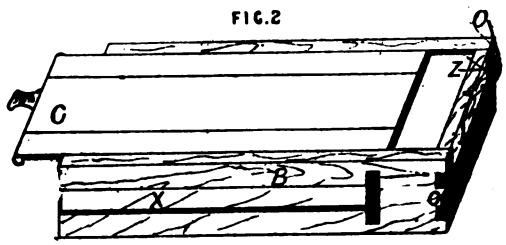

outer. A spring platform D at the end of the outer box, and a spring flap at the back, then guide and hold the plate to a rabbet in the front for exposure. The inner box is now pushed back; and when the plate is exposed it is allowed to fall into it by withdrawing the sliding lid C. The plates in the inner box are held by a spring board in connection with the handle so as to be released on withdrawing the box. Several boxes corresponding with the inner box may be used with one outer box.

18,403. Guiton, P. J. Dec. 17.

Cameras; change-boxes. — The sensitized plates *b*, *b* are held in a rectangular frame *a*. The camera *d* is fitted on an endless band *c*, which encloses the plates everywhere except opposite the camera. The camera is moved in succession in front of each plate, before exposing; or the frame may move while the camera is fixed. details may be modified.

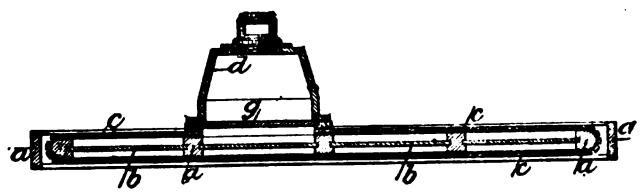

A sliding shutter *g* is fixed between the plate and the camera. The

Digitized by Google

18,542. Perken, E., Perken, F. L., and **Rayment, A.,** [*trading as* Perken, Son, & Rayment], and **North, C. G.** Dec. 19.

Cameras; enlarging; copying documents &c.—Relates to an adjusting-arrangement for enlarging and copying-lanterns, and for focussing &c. purposes generally. The rack pinion *b* has reduced portions *c*, by which the pinion can be thrown in or out of gear on sliding the same longitudinally. The recessed portion or portions may be so arranged that the rack of one slide may be in gear, while that of another is out of gear.

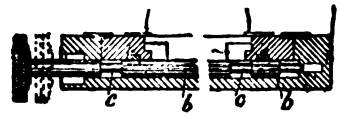

18,562. Tulley, J. S. Dec. 19.

Mounting prints.—The prints M are held in a receptacle B and the cards L in a receptacle A hinged to the former. Both the cards and prints are pressed towards one another by springs D and E, and the foremost print is thus attached to the foremost card. The receptacles may be partitioned so that three or more prints may be thus mounted at a time. To remove the mounted print or prints the top receptacle is lifted, and the pivoted retaining-flange F turned round, while the spring E is held down by a foot-lever. The paste &c., which is applied by a roller &c., is held in a receptacle G secured to the lower receptacle. The mounted prints are dried between blotting-paper in a double fan-shaped press, from which they are allowed to fall into a basket.

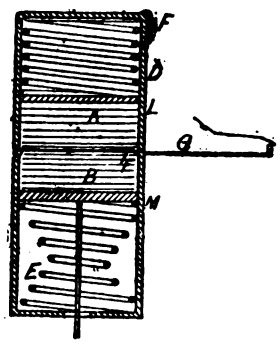

18,640. Browne, M., [*Fichtner, F. A.*]. Dec. 20.

Change-boxes.—The box A in which the plates are stored is attached to the side of the camera B. The attachment is effected by hooks on the lower side of the box A, fitting into the staples on the upper side of the camera, and a hook and staple fastening actuated by a slotted cam on the upper side of the box and camera. The unexposed plates are fixed in sheaths or frames *a*, the slide A^1 being removed for their insertion into the box A. A plate is transferred to the camera, and returned to the box after exposure, through the aperture *b*, which is furnished with a nozzle which fits into a corresponding aperture in the side of the camera. After attachment, a slide *c* closing the aperture *b* is opened by a spindle *l* and system of levers s^1 and *t*, &c. The plate is then drawn into the camera by a slide *y* furnished with a hook actuated by a wire y^3, exposed and returned to the box by the same slide. To bring any required plate into position for transfer to the camera the box is traversed by rack and pinion. The position on a scale of numbers of one edge of the sliding shutter A^2, which is attached to the camera, indicates the plate that will be transferred.

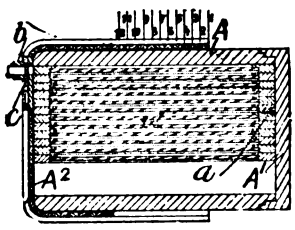

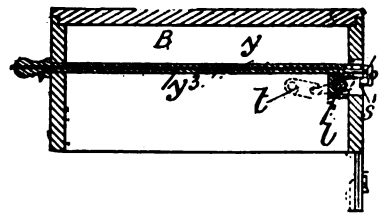

18,796. Taylor, J. H. Dec. 22.

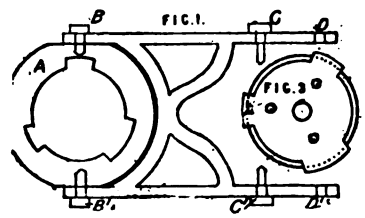

Cameras, stand attachments for. Relates to arrangements in connection with the heads by which the camera can be reversed so as to have the long or short side vertical, and also by which the diagonal of the plate and the axis of the lens can be inclined to the vertical and horizontal respectively. The camera is secured to a turn-table, Fig. 3, which engages in and is clamped to a

Digitized by Google

block A, Fig. 1, pivoted to bars B, B¹, the other ends of which are pivoted at C, C¹ to ears on a stage consisting of a disc of wood attached by a turntable to a triangular tripod head. The bars have extensions D, D¹ provided with slots concentric with the pivots C, C¹ by which they can be clamped. To reverse the sides of the camera the bars are swung from the horizontal to the vertical while the camera is swung in the opposite direction, the camera in both positions of rest being supported on the wooden disc. To incline the diagonal of the plate and the axis of the lens the bars are clamped at an angle and the turntable is rotated. The same apparatus may be made available for different cameras not differing greatly in dimensions, by using adjustable clamps.

Digitized by Google

LONDON:
PRINTED FOR HER MAJESTY'S STATIONERY OFFICE,
By DARLING & SON, Ltd., 1, 2, 3 & 5, Great St. Thomas Apostle, E.C.
Published at the PATENT OFFICE, 25, Southampton Buildings,
Chancery Lane, London, W.C.

1896.

Digitized by Google

ABRIDGMENTS OF SPECIFICATIONS.

Sold at the Patent Office, 25, Southampton Buildings, Chancery Lane, London, W.C.

A.—1617—1876.

Price 2s. per Volume, including Inland Postage.

Without illustrations (crown octavo size).

1. DRAINS AND SEWERS.
   1619–1866. 1867-1876 (including Manure).
2. SEWING AND EMBROIDERING.
   1755–1866. 1867-1876.
3. MANURE.
   1721–1855. 1856–1866. 1867-1876, *see* 1.
4. PRESERVATION OF FOOD.
   1691–1855. 1856–1866.
5. MARINE PROPULSION (excluding Sails).
   1618–1857. 1857–1866. 1867-1876, *see* 75.
6. MANUFACTURE OF IRON AND STEEL.
   1620–1866. 1867-1876.
7. AIDS TO LOCOMOTION, 1691–1856.
8. STEAM CULTURE. 1618–1856, *see* 81 and 83.
9. WATCHES, CLOCKS, AND OTHER TIMEKEEPERS.
   1661–1856. 1857–1866. 1867-1876.
10. FIRE-ARMS AND OTHER WEAPONS, AMMUNITION, AND ACCOUTREMENTS.
    1588–1858. 1858–1866.
    1867-1876. DIV. I., FIRE-ARMS AND SIMILAR WEAPONS.
    " DIV. II., CARTRIDGES, PROJECTILES, AND EXPLOSIVES.
11. MANUFACTURE OF PAPER, PASTEBOARD, AND PAPIER-MÂCHÉ.
    1665–1857. 1858–1866.
12. CUTTING, FOLDING, AND ORNAMENTING PAPER.
    1636–1866. 1867-1876.
13. LETTERPRESS AND SIMILAR PRINTING.
    1617–1857. 1858–1866. 1867-1876.
14. BLEACHING, DYEING, AND PRINTING CALICO AND OTHER FABRICS AND YARNS.
    1617–1857. 1858–1866. 1867-1876.
15. ELECTRICITY AND MAGNETISM, THEIR GENERATION AND APPLICATIONS.
    1766–1857. 1858–1866. 1867-1876 *see* 92, 93, 94, 95, [96, and 97.
16. PREPARATION OF INDIA-RUBBER AND GUTTA-PERCHA.
    1791–1866. 1867-1876.
17. PRODUCTION AND APPLICATIONS OF GAS.
    1681–1858. 1859–1866.
18. METALS AND ALLOYS (*excepting* Iron and steel).
    1623–1859. 1860–1866. 1867-1876.
19. PHOTOGRAPHY.
    1839–1859. 1860–1866. 1867-1876.
20. WEAVING.
    1620–1859. 1860–1866. 1867-1876.
21. SHIP BUILDING, REPAIRING, SHEATHING, LAUNCHING, &c.
    1618–1860. 1861–1866.
22. BRICKS AND TILES.
    1619–1860. 1861–1866.
23. PLATING OR COATING METALS WITH METALS.
    1637–1860. 1861–1866.
24. POTTERY.
    1626–1861. 1862–1866.
25. MEDICINE, SURGERY, AND DENTISTRY. 1620–1866.
26. MUSIC AND MUSICAL INSTRUMENTS.
    1694–1866. 1867-1876.
27. OILS, FATS, LUBRICANTS, CANDLES, AND SOAPS, 1617–1866.
28. SPINNING.
    1624–1863 (out of print). 1864–1866.
29. LACE-MAKING, KNITTING, NETTING, BRAIDING, AND PLAITING. 1675–1866.
30. PREPARATION AND COMBUSTION OF FUEL. 1620–1865 (out of print).
31. RAISING, LOWERING, AND WEIGHING. 1617–1866.
32. HYDRAULICS. 1617–1866.
33. RAILWAYS.
    1803–1866. 1867-1876.
34. SADDLERY, HARNESS, STABLE FITTINGS, &c.
    1625–1866. 1867-1876.
35. ROADS AND WAYS. 1619–1866.
36. BRIDGES, VIADUCTS, AND AQUEDUCTS. 1750–1866.
37. WRITING INSTRUMENTS AND MATERIALS.
    1635–1866. 1867-1876.
38. RAILWAY SIGNALS AND COMMUNICATING APPARATUS.
    1840–1866 (out of print).
39. FURNITURE AND UPHOLSTERY. 1620–1866.
40. ACIDS, ALKALIES, OXIDES, AND SALTS.
    1622–1866. 1867-1876, *see* 101, 102, and 103.
41. AERONAUTICS. 1815–1866.
42. PREPARATION AND USE OF TOBACCO. 1721–1866.
43. BOOKS, PORTFOLIOS, CARD-CASES, &c. 1768–1866.
44. LAMPS, CANDLESTICKS, CHANDELIERS, AND OTHER ILLUMINATING APPARATUS. 1637–1866.
45. NEEDLES AND PINS. 1755–1866.
46. CARRIAGES AND OTHER VEHICLES FOR RAILWAYS.
    1807–1866.
47. UMBRELLAS, PARASOLS, AND WALKING-STICKS.
    1786–1866. 1867-1876.
48. SUGAR. 1663–1866.
49. STEAM ENGINES.
    1618–1859. 1860–1866.
50. PAINTS, COLOURS, AND VARNISHES. 1618–1866.
51. TOYS, GAMES, AND EXERCISES. 1672–1866.
52. VENTILATION. 1632–1866.
53. FARRIERY.
    1719–1866. 1867-1876.
54. ARTISTS' INSTRUMENTS AND MATERIALS. 1618–1866.
55. SKINS, HIDES, AND LEATHER. 1627–1866.
56. PREPARING AND CUTTING CORK, BOTTLING LIQUIDS, &c.
    1777–1866. 1867-1876.
57. BRUSHING AND SWEEPING. 1699–1866.
58. NAILS, RIVETS, BOLTS, SCREWS, NUTS, AND WASHERS. 1618–1866.
59. HINGES, HINGE-JOINTS, AND DOOR SPRINGS. 1775–1866.
60. LOCKS, LATCHES, BOLTS, AND SIMILAR FASTENINGS.
    1774–1866.
61. COOKING, BREAD-MAKING, AND CONFECTIONERY.
    1634–1866. 1867-1876.
62. AIR, GAS, AND OTHER MOTIVE-POWER ENGINES.
    1635–1866. 1867-1876.
63. WATER CLOSETS, EARTH CLOSETS, URINALS, &c.
    1775–1866.
64. SAFES, STRONG ROOMS, TILLS, &c. 1801–1866.
65. WEARING-APPAREL.—DIV. I.—HEAD COVERINGS.
    1637–1866.
66. ——— DIV. II.—BODY COVERINGS. 1671–1866.
67. ——— DIV. III.—FOOT COVERINGS. 1693–1866.
68. ——— DIV. IV.—DRESS FASTENINGS AND JEWELLERY.
    1631–1866.
69. ANCHORS. 1796–1866.
70. METALLIC PIPES AND TUBES.
    1741–1866. 1867-1876.
71. MINING, QUARRYING, TUNNELLING, AND WELL-SINKING. 1618–1866.
72. MILKING, CHURNING, AND CHEESE-MAKING.
    1777–1866. 1867-1876.
73. MASTS, SAILS, RIGGING, &c. 1625–1866.
74. CASKS AND BARRELS. 1797–1866.
75. STEERING AND MANŒUVRING VESSELS.
    1763–1866. 1867-1876.
76. OPTICAL, MATHEMATICAL, AND OTHER PHILOSOPHICAL INSTRUMENTS. 1636–1866.
77. HARBOURS, DOCKS, CANALS, &c. 1617–1866.
78. GRINDING GRAIN, AND DRESSING FLOUR AND MEAL.
    1623–1866.
79. PURIFYING AND FILTERING WATER.
    1675–1866. 1867-1876.
80. ARTIFICIAL LEATHER, FLOORCLOTH, OILCLOTH, OILSKIN, AND OTHER WATERPROOF FABRICS.
    1627–1866. 1867-1876.
81. AGRICULTURE.—DIV. I.—FIELD IMPLEMENTS.
    1618–1866. 1867-1876.
82. ——— DIV. II.—BARN AND FARMYARD IMPLEMENTS, (*including* the cleansing, drying, and storing of grain).
    1636–1866. 1867-1876.
83. ——— DIV. III.—AGRICULTURAL AND TRACTION ENGINES. 1618–1866.
84. TRUNKS, PORTMANTEAUS, BOXES, AND BAGS. 1635–1866.
85. ICE-MAKING MACHINES, ICE SAFES, AND ICE HOUSES.
    1819–1866. 1867-1876.
86. UNFERMENTED BEVERAGES, AERATED LIQUIDS, MINERAL WATERS, &c.
    1774–1866. 1867-1876.

P 12960—152,250—3/96 Wt 25886 D & S

Digitized by Google

87. TEA, COFFEE, CHICORY, CHOCOLATE, COCOA, &c. 1704-1866. 1867-1876.
88. FIRE ENGINES, EXTINGUISHERS, ESCAPES, ALARMS, &c. 1625-1866.
89. WASHING AND WRINGING MACHINES. 1691-1866. 1867-1876.
90. CHAINS, CHAIN CABLES, &c. 1634-1866. 1867-1876.
91. DRESSING AND FINISHING WOVEN FABRICS, AND MANUFACTURING FELTED FABRICS. 1620-1866 1867-1876.
92. ELECTRICITY AND MAGNETISM.—DIV I.—GENERATION OF ELECTRICITY AND MAGNETISM. 1766-1866, *see* 15. 1867-1876.
93. ——— DIV. II.—CONDUCTING AND INSULATING. 1766-1866, *see* 15. 1867-1876
94. ——— DIV. III.—TRANSMITTING AND RECEIVING SIGNALS, CONTROLLING MECHANICAL ACTION, AND EXHIBITING ELECTRIC EFFECTS. 1766-1866, *see* 15. 1867-1876.
95. ——— DIV. IV.—ELECTRIC LIGHTING, IGNITING, AND HEATING. 1839-1876.
96. ——— DIV. V.—ELECTRODEPOSITION AND ELECTROLYSIS. 1805-1876.
97. ——— DIV. VI.—ELECTRIC MOTIVE-POWER ENGINES AND SIMILAR APPARATUS. 1837-1876.
98. CARRIAGES AND OTHER VEHICLES FOR COMMON ROADS. 1625-1866.
99. BREWING, WINE-MAKING, AND DISTILLING ALCOHOLIC LIQUIDS. 1634-1866
100. STARCH, GUM, SIZE, GLUE, &c. 1717-1876.
101. ACIDS, ALKALIES, OXIDES, AND SALTS:— DIV. I.—ACIDS, CHLORINE, SULPHUR, &c. 1622-1866, *see* 40. 1867-1876
102. ——— DIV II.—ALKALIES, OXIDES, AND SALTS. 1622-1866, *see* 40. 1867-1876.
103. ——— DIV. III.—BENZENE DERIVATIVES AND OTHER CARBON COMPOUNDS. 1622-1866, *see* 40. 1867-1876.

B.—1877—1883.

Price 1s. per Volume, including Inland Postage.

(1.)—With Illustrations (large octavo size).

3. ADVERTISING AND DISPLAYING.
4. AERONAUTICS.
5. AGRICULTURAL APPLIANCES, FARMYARD AND LIKE, [*including* the housing, feeding, and treatment of animals].
6. AGRICULTURAL APPLIANCES FOR THE TREATMENT OF LAND AND CROPS, [*including* Gardening-appliances].
7. AIR AND GAS ENGINES.
8. AIR AND GASES, COMPRESSING, EXHAUSTING, MOVING, AND OTHERWISE TREATING.
10. ANIMAL-POWER ENGINES AND MISCELLANEOUS MOTORS.
11. ARTISTS' INSTRUMENTS AND MATERIALS.
12. BEARINGS AND LUBRICATING-APPARATUS.
13. BELLS, GONGS, FOGHORNS, SIRENS, AND WHISTLES.
14. BEVERAGES, [*excepting* Tea, coffee, cocoa, and like beverages].
16. BOOKS, [*including* Cards and card cases and the like].
18. BOXES AND CASES, [*excepting* Trunks, portmanteaus, hand and like travelling bags, baskets, hampers, and other wickerwork].
19. BRUSHING AND SWEEPING.
20. BUILDINGS AND STRUCTURES.
21. CASKS AND BARRELS.
22. CEMENTS AND LIKE COMPOSITIONS.
23. CENTRIFUGAL DRYING, SEPARATING, AND MIXING MACHINES AND APPARATUS.
24. CHAINS, CHAIN CABLES, SHACKLES, AND SWIVELS.
25. CHIMNEYS AND FLUES, [*including* Ventilating-shaft tops].
26. CLOSETS, URINALS, BATHS, LAVATORIES, AND LIKE SANITARY APPLIANCES.
27. COIN-FREED APPARATUS AND THE LIKE.
28. COOKING AND KITCHEN APPLIANCES, BREAD-MAKING, AND CONFECTIONERY.
29. COOLING AND ICE-MAKING, [*including* Refrigerators *and* Ice-storing].
30. CUTLERY.
31. CUTTING, PUNCHING, AND PERFORATING PAPER, LEATHER, AND FABRICS, [*including* the general treatment of paper after its manufacture].
32. DISTILLING, CONCENTRATING, EVAPORATING, AND CONDENSING LIQUIDS, [*excepting* Steam-engine condensers].
33. DRAINS AND SEWERS.
34. DRYING.
42. FABRICS, DRESSING AND FINISHING WOVEN AND MANUFACTURING FELTED, [*including* Folding, Winding, Measuring, *and* Packing].
44. FASTENINGS, LOCK, LATCH, BOLT, AND OTHER, [*including* Safes and strong-rooms].
45. FENCING, TRELLIS, AND WIRE NETTING.
46. FILTERING AND OTHERWISE PURIFYING LIQUIDS.
47. FIRE, EXTINCTION AND PREVENTION OF.
48. FISH AND FISHING.
49. FOOD PREPARATIONS AND FOOD-PRESERVING.
50. FUEL, MANUFACTURE OF.
51. FURNACES AND KILNS, [*including* Blowpipes and blowpipe burners; Smiths' forges and rivet hearths; Smoke and fumes, treating].
52. FURNITURE AND UPHOLSTERY.
54. GAS DISTRIBUTION.
55. GAS MANUFACTURE.
56. GLASS.
57. GOVERNORS, SPEED-REGULATING, FOR ENGINES AND MACHINERY.
58. GRAIN AND SEEDS, TREATING, [*including* Flour and meal].
59. GRINDING, CRUSHING, PULVERIZING, AND THE LIKE.
60. GRINDING OR ABRADING, AND BURNISHING.
61. HAND TOOLS AND BENCHES FOR THE USE OF METAL, WOOD, AND STONE WORKERS.
62. HARNESS AND SADDLERY.
64. HEATING, [*excepting* Furnaces *and* Stoves].
65. HINGES, HINGE-JOINTS, AND DOOR AND GATE FURNITURE AND ACCESSORIES, [*excepting* Fastenings, Lock, latch, bolt, and other].
66. HOLLOW-WARE [*including* Buckets, Pans, Kettles, Saucepans, *and* Water-cans].
67. HORSE-SHOES.
68. HYDRAULIC ENGINEERING.
69. HYDRAULIC MACHINERY AND APPARATUS, [*excepting* Pumps and other means for raising and forcing water].
70. INDIA-RUBBER AND GUTTA-PERCHA, [*including* Plastic compositions *and* Materials of constructive utility other than metals and stone].
71. INJECTORS AND EJECTORS.
73. LABELS, BADGES, COINS, TOKENS, AND TICKETS.
74. LACE-MAKING, KNITTING, NETTING, BRAIDING, AND PLAITING.
75. LAMPS, CANDLESTICKS, GASALIERS, AND OTHER ILLUMINATING APPARATUS, [*excepting* Electric lamps].
76. LEATHER, [*including* Treatment of hides and skins].
77. LIFE-SAVING [MARINE], AND SWIMMING AND BATHING APPLIANCES.
78. LIFTING, HAULING, AND LOADING, [*including* Lowering, Winding, *and* Unloading].
79. LOCOMOTIVES, TRAMWAY AND TRACTION ENGINES, AND PORTABLE AND SEMI-PORTABLE ENGINES.
80. MECHANISM AND MILL GEARING.
81. MEDICINE, SURGERY, AND DENTISTRY.
83. METALS, CUTTING AND WORKING.
84. MILKING, CHURNING, AND CHEESE-MAKING.
85. MINING, QUARRYING, TUNNELLING, AND WELL-SINKING.
86. MIXING AND AGITATING MACHINES AND APPLIANCES.
87. MOULDING PLASTIC AND POWDERED SUBSTANCES, [*including* Bricks, building and paving blocks, and tiles, *and* Pottery].
88. MUSIC AND MUSICAL INSTRUMENTS.
89. NAILS, RIVETS, BOLTS, NUTS, SCREWS, AND LIKE FASTENINGS.
91. OILS, FATS, LUBRICANTS, CANDLES, AND SOAPS.
93. ORNAMENTING.
94. PACKING AND BALING GOODS.
95. PAINTS, COLOURS, AND VARNISHES.
96. PAPER, PASTEBOARD, AND PAPIER MÂCHE.
97. PHILOSOPHICAL INSTRUMENTS, [*including* Optical, Nautical, Surveying, Mathematical, *and* Meteorological instruments].
99. PIPES, TUBES, AND HOSE.
100. PRINTING, LETTERPRESS AND LITHOGRAPHIC.
101. PRINTING OTHER THAN LETTERPRESS OR LITHOGRAPHIC.
102. PUMPS AND OTHER MEANS FOR RAISING AND FORCING WATER, [*excepting* Rotary pumps].
103. RAILWAY AND TRAMWAY VEHICLES.
104. RAILWAYS AND TRAMWAYS.
105. RAILWAY SIGNALS AND COMMUNICATING APPARATUS.
106. REGISTERING, INDICATING, MEASURING, AND CALCULATING, [*excepting* Signalling and indicating by signals].
107. ROADS AND WAYS.
108. ROAD VEHICLES.
109. ROPES AND CORDS.
110. ROTARY ENGINES, PUMPS, BLOWERS, EXHAUSTERS, AND METERS.
111. SEWAGE, TREATMENT OF, [*including* Manure].
113. SHIPS, BOATS, AND RAFTS, DIV. I.
114. ——— DIV. II.
115. ——— DIV. III.
116. SHOP, PUBLICHOUSE, AND WAREHOUSE FITTINGS AND ACCESSORIES.

Digitized by Google

117. SIFTING AND SEPARATING.
118. SIGNALLING AND INDICATING BY SIGNALS, [*excepting* Railway signals and communicating apparatus].
120. SPINNING, [*including* the preparation of fibrous materials *and* the doubling of yarns and threads].
121. STARCH, GUM, SIZE, GLUE, AND OTHER STIFFENING AND ADHESIVE MATERIALS.
122. STEAM ENGINES, [*including* Details common to fluid-pressure engines generally].
123. STEAM GENERATORS, [*excepting* Furnaces].
124. STONE, MARBLE, AND THE LIKE, CUTTING AND WORKING.
126. STOVES, RANGES, AND FIREPLACES.
127. SUGAR.
128. TABLE ARTICLES AND APPLIANCES.
129. TEA, COFFEE, COCOA, AND LIKE BEVERAGES.
130. TOBACCO.
131. TOILET AND HAIRDRESSING ARTICLES, AND PERFUMERY.
132. TOYS, GAMES, AND EXERCISES.
133. TRUNKS, PORTMANTEAUS, HAND AND LIKE TRAVELLING BAGS, BASKETS, HAMPERS, AND OTHER WICKERWORK.
134. UMBRELLAS, PARASOLS, AND WALKING-STICKS.
135. VALVES AND COCKS.
136. VELOCIPEDES.
137. VENTILATION.
138. WASHING AND CLEANING CLOTHES, DOMESTIC ARTICLES, AND BUILDINGS.
139. WATCHES, CLOCKS, AND OTHER TIMEKEEPERS.
140. WATERPROOF AND SIMILAR FABRICS.
142. WEAVING AND WOVEN FABRICS.
143. WEIGHING-APPARATUS.
144. WHEELS FOR VEHICLES, [*excepting wheels for* Locomotives and tramway engines, Railway and tramway vehicles, Toys, *or* Traction engines and road locomotives].
145. WOOD AND WOOD-WORKING MACHINERY.
146. WRITING-INSTRUMENTS AND STATIONERY AND WRITING ACCESSORIES, [*including* Educational appliances].

(2.)—Without Illustrations (crown octavo size).

No. of Vol. in Old Series.		Corresponding No. in New Series.
101	ACIDS, CHLORINE, SULPHUR, &c.	1
102	ALKALIES, OXIDES, AND SALTS.	
103	BENZENE DERIVATIVES AND OTHER CARBON COMPOUNDS.	2
14	BLEACHING, DYEING, AND PRINTING CALICO AND OTHER FABRICS AND YARNS.	15
99	BREWING, WINE-MAKING, AND DISTILLING ALCOHOLIC LIQUIDS.	14
	ELECTRICITY &c.:—	
92	GENERATION OF ELECTRICITY AND MAGNETISM.	
93	CONDUCTING AND INSULATING.	
94	TRANSMITTING AND RECEIVING SIGNALS, CONTROLLING MECHANICAL ACTION, AND EXHIBITING ELECTRIC EFFECTS.	35 36 37 38
95	ELECTRIC LIGHTING, IGNITING, AND HEATING.	39 40
96	ELECTRODEPOSITION AND ELECTROLYSIS.	41
97	ELECTRIC MOTIVE-POWER ENGINES AND SIMILAR APPARATUS.	53
	FIRE-ARMS &c.:—	
10	FIRE-ARMS AND SIMILAR WEAPONS.	9
	CARTRIDGES, PROJECTILES, AND EXPLOSIVES.	92 119
6	MANUFACTURE OF IRON AND STEEL.	72
18	METALS AND ALLOYS.	82
19	PHOTOGRAPHY.	98
56	PREPARING AND CUTTING CORK, BOTTLING LIQUIDS, SECURING AND OPENING BOTTLES, AND THE LIKE.	125
2	SEWING AND EMBROIDERING.	112
	WEARING-APPAREL:—	
65	HEAD COVERINGS.	63
66	BODY COVERINGS.	141
67	FOOT COVERINGS.	17
68	DRESS FASTENINGS AND JEWELLERY.	43

(3.)—Illustrated Appendices (large octavo size) to Unillustrated Volumes in (2).

14. BLEACHING &c.
10. FIRE-ARMS &c.:—
DIV. I.—FIRE-ARMS &c.
DIV. II.—CARTRIDGES &c.
19. PHOTOGRAPHY.
56. PREPARING AND CUTTING CORK &c.
2. SEWING AND EMBROIDERING.
WEARING-APPAREL:—
65. DIV. I.—HEAD COVERINGS.
66. DIV. II.—BODY COVERINGS.
67. DIV. III.—FOOT COVERINGS.
68. DIV. IV.—DRESS FASTENINGS AND JEWELLERY.

C.—1884—1888.

Price 1s. per Volume, including Inland Postage.

With illustrations (large octavo size).

1. ACIDS, ALKALIES, OXIDES, AND SALTS, INORGANIC.
2. ACIDS AND SALTS, ORGANIC, AND OTHER CARBON COMPOUNDS, [*including* Dyes].
3. ADVERTISING AND DISPLAYING.
4. AERONAUTICS.
5. AGRICULTURAL APPLIANCES, FARMYARD AND LIKE, [*including* the housing, feeding, and treatment of animals].
6. AGRICULTURAL APPLIANCES FOR THE TREATMENT OF LAND AND CROPS, [*including* Gardening-appliances].
7. AIR AND GAS ENGINES.
8. AIR AND GASES, COMPRESSING, EXHAUSTING, MOVING, AND OTHERWISE TREATING.
9. AMMUNITION, TORPEDOES, EXPLOSIVES, AND PYROTECHNICS.
10. ANIMAL-POWER ENGINES AND MISCELLANEOUS MOTORS.
11. ARTISTS' INSTRUMENTS AND MATERIALS.
12. BEARINGS AND LUBRICATING-APPARATUS.
13. BELLS, GONGS, FOGHORNS, SIRENS, AND WHISTLES.
14. BEVERAGES, [*excepting* Tea, coffee, cocoa, and like beverages].
15. BLEACHING, DYEING, AND WASHING TEXTILE MATERIALS, YARNS, FABRICS, AND THE LIKE, [*excepting* Dyes].
16. BOOKS, [*including* Cards and card cases and the like].
17. BOOTS AND SHOES.
18. BOXES AND CASES, [*excepting* Trunks, portmanteaus, hand and like travelling bags, baskets, hampers, and other wickerwork].
19. BRUSHING AND SWEEPING.
20. BUILDINGS AND STRUCTURES.
21. CASKS AND BARRELS.
22. CEMENTS AND LIKE COMPOSITIONS.
23. CENTRIFUGAL DRYING, SEPARATING, AND MIXING MACHINES AND APPARATUS.
24. CHAINS, CHAIN CABLES, SHACKLES, AND SWIVELS.
25. CHIMNEYS AND FLUES, [*including* Ventilating-shaft tops].
26. CLOSETS, URINALS, BATHS, LAVATORIES, AND LIKE SANITARY APPLIANCES.
27. COIN-FREED APPARATUS AND THE LIKE.
28. COOKING AND KITCHEN APPLIANCES, BREAD-MAKING, AND CONFECTIONERY.
29. COOLING AND ICE-MAKING, [*including* Refrigerators *and* Ice-storing].
30. CUTLERY.
31. CUTTING, PUNCHING, AND PERFORATING PAPER, LEATHER, AND FABRICS, [*including* the general treatment of paper after its manufacture].
32. DISTILLING, CONCENTRATING, EVAPORATING, AND CONDENSING LIQUIDS, [*excepting* Steam-engine condensers].
33. DRAINS AND SEWERS.
34. DRYING.
35. DYNAMO-ELECTRIC GENERATORS AND MOTORS.
36. ELECTRICITY, CONDUCTING AND INSULATING.
37. ELECTRICITY, MEASURING AND TESTING.
38. ELECTRICITY, REGULATING AND DISTRIBUTING.
39. ELECTRIC LAMPS AND FURNACES.
40. ELECTRIC TELEGRAPHS AND TELEPHONES.
41. ELECTROLYSIS, [*including* Electrodeposition *and* Electroplating].
42. FABRICS, DRESSING AND FINISHING WOVEN AND MANUFACTURING FELTED, [*including* Folding, Winding, Measuring, *and* Packing].

Digitized by Google

43. FASTENINGS, DRESS, [*including* Jewellery].
44. FASTENINGS, LOCK, LATCH, BOLT, AND OTHER, [*including* Safes and strong-rooms].
45. FENCING, TRELLIS, AND WIRE NETTING.
46. FILTERING AND OTHERWISE PURIFYING LIQUIDS.
47. FIRE, EXTINCTION AND PREVENTION OF.
48. FISH AND FISHING.
49. FOOD PREPARATIONS AND FOOD-PRESERVING.
50. FUEL, MANUFACTURE OF.
51. FURNACES AND KILNS, [*including* Blowpipes and blowpipe burners; Smiths' forges and rivet hearths; Smoke and fumes, Treating].
52. FURNITURE AND UPHOLSTERY.
53. GALVANIC BATTERIES.
54. GAS DISTRIBUTION.
55. GAS MANUFACTURE.
56. GLASS.
57. GOVERNORS, SPEED-REGULATING, FOR ENGINES AND MACHINERY.
58. GRAIN AND SEEDS, TREATING, [*including* Flour and meal].
59. GRINDING, CRUSHING, PULVERIZING, AND THE LIKE.
60. GRINDING OR ABRADING, AND BURNISHING.
61. HAND TOOLS AND BENCHES FOR THE USE OF METAL, WOOD, AND STONE WORKERS.
62. HARNESS AND SADDLERY.
63. HATS AND OTHER HEAD COVERINGS.
64. HEATING, [*excepting* Furnaces *and* Stoves].
65. HINGES, HINGE-JOINTS, AND DOOR AND GATE FURNITURE AND ACCESSORIES, [*excepting* Fastenings, Lock, latch, bolt, and other].
66. HOLLOW-WARE, [*including* Buckets, Pans, Kettles, Saucepans, *and* Water-cans].
67. HORSE-SHOES.
68. HYDRAULIC ENGINEERING.
69. HYDRAULIC MACHINERY AND APPARATUS, [*excepting* Pumps and other means for raising and forcing water].
70. INDIA-RUBBER AND GUTTA-PERCHA, [*including* Plastic compositions *and* Materials of constructive utility other than metals and stone].
71. INJECTORS AND EJECTORS.
72. IRON AND STEEL MANUFACTURE.
73. LABELS, BADGES, COINS, TOKENS, AND TICKETS.
74. LACE-MAKING, KNITTING, NETTING, BRAIDING, AND PLAITING.
75. LAMPS, CANDLESTICKS, GASALIERS, AND OTHER ILLUMINATING APPARATUS, [*excepting* Electric lamps].
76. LEATHER, [*including* Treatment of hides and skins].
77. LIFE-SAVING [MARINE], AND SWIMMING AND BATHING APPLIANCES.
78. LIFTING, HAULING, AND LOADING, [*including* Lowering, Winding, *and* Unloading].
79. LOCOMOTIVES, TRAMWAY AND TRACTION ENGINES, AND PORTABLE AND SEMI-PORTABLE ENGINES.
80. MECHANISM AND MILL GEARING.
81. MEDICINE, SURGERY, AND DENTISTRY.
82. METALS AND ALLOYS, [*excepting* Iron and steel manufacture].
83. METALS, CUTTING AND WORKING.
84. MILKING, CHURNING, AND CHEESE-MAKING.
85. MINING, QUARRYING, TUNNELLING, AND WELL-SINKING.
86. MIXING AND AGITATING MACHINES AND APPLIANCES.
87. MOULDING PLASTIC AND POWDERED SUBSTANCES, [*including* Bricks, building and paving blocks, and tiles, *and* Pottery].
88. MUSIC AND MUSICAL INSTRUMENTS.
89. NAILS, RIVETS, BOLTS, NUTS, SCREWS, AND LIKE FASTENINGS.
90. NON-METALLIC ELEMENTS.
91. OILS, FATS, LUBRICANTS, CANDLES, AND SOAPS.
92. ORDNANCE AND MACHINE GUNS.
93. ORNAMENTING.
94. PACKING AND BALING GOODS.
95. PAINTS, COLOURS, AND VARNISHES.
96. PAPER, PASTEBOARD, AND PAPIER MÂCHÉ.
97. PHILOSOPHICAL INSTRUMENTS, [*including* Optical, Nautical, Surveying, Mathematical, *and* Meteorological instruments].
98. PHOTOGRAPHY.
99. PIPES, TUBES, AND HOSE.
100. PRINTING, LETTERPRESS AND LITHOGRAPHIC.
101. PRINTING OTHER THAN LETTERPRESS OR LITHOGRAPHIC.
102. PUMPS AND OTHER MEANS FOR RAISING AND FORCING WATER, [*excepting* Rotary pumps].
103. RAILWAY AND TRAMWAY VEHICLES.
104. RAILWAYS AND TRAMWAYS.
105. RAILWAY SIGNALS AND COMMUNICATING APPARATUS.
106. REGISTERING, INDICATING, MEASURING, AND CALCULATING, [*excepting* Signalling and indicating by signals].
107. ROADS AND WAYS.
108. ROAD VEHICLES.
109. ROPES AND CORDS.
110. ROTARY ENGINES, PUMPS, BLOWERS, EXHAUSTERS, AND METERS.
111. SEWAGE, TREATMENT OF, [*including* Manure].
112. SEWING AND EMBROIDERING.
113. SHIPS, BOATS, AND RAFTS, DIV. I.
114. ——————————DIV. II.
115. ——————————DIV. III.
116. SHOP, PUBLICHOUSE, AND WAREHOUSE FITTINGS AND ACCESSORIES.
117. SIFTING AND SEPARATING.
118. SIGNALLING AND INDICATING BY SIGNALS, [*excepting* Railway signals and communicating apparatus].
119. SMALL-ARMS.
120. SPINNING, [*including* the preparation of fibrous materials *and* the doubling of yarns and threads].
121. STARCH, GUM, SIZE, GLUE, AND OTHER STIFFENING AND ADHESIVE MATERIALS.
122. STEAM ENGINES, [*including* Details common to fluid-pressure engines generally].
123. STEAM GENERATORS, [*excepting* Furnaces].
124. STONE, MARBLE, AND THE LIKE, CUTTING AND WORKING.
125. STOPPERING AND BOTTLING, [*including* Bottles, jars, and like vessels].
126. STOVES, RANGES, AND FIREPLACES.
127. SUGAR.
128. TABLE ARTICLES AND APPLIANCES.
129. TEA, COFFEE, COCOA, AND LIKE BEVERAGES.
130. TOBACCO.
131. TOILET AND HAIRDRESSING ARTICLES, AND PERFUMERY.
132. TOYS, GAMES, AND EXERCISES.
133. TRUNKS, PORTMANTEAUS, HAND AND LIKE TRAVELLING BAGS, BASKETS, HAMPERS, AND OTHER WICKER-WORK.
134. UMBRELLAS, PARASOLS, AND WALKING-STICKS.
135. VALVES AND COCKS.
136. VELOCIPEDES.
137. VENTILATION.
138. WASHING AND CLEANING CLOTHES, DOMESTIC ARTICLES, AND BUILDINGS.
139. WATCHES, CLOCKS, AND OTHER TIMEKEEPERS.
140. WATERPROOF AND SIMILAR FABRICS.
141. WEARING-APPAREL.
142. WEAVING AND WOVEN FABRICS.
143. WEIGHING-APPARATUS.
144. WHEELS FOR VEHICLES, [*excepting wheels for* Locomotives and tramway engines, Railway and tramway vehicles, Toys, *or* Traction engines and road locomotives].
145. WOOD AND WOOD-WORKING MACHINERY.
146. WRITING-INSTRUMENTS AND STATIONERY AND WRITING ACCESSORIES, [*including* Educational appliances].

D.—1889—1892. (*In preparation.*)

It is hoped that this Series may be published in 1898.

E.—1893—1897. (*In preparation.*)

The first sheets in the longer Classes are now being struck off, and may be seen in the Patent Office Library.

Digitized by Google

Digitized by Google

Digitized by Google

Digitized by Google

Digitized by Google

MAR 24 1947

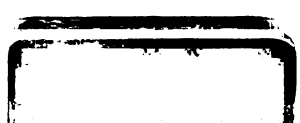

Digitized by Google

Digitized by Google